DK

ORIGINAL DOKUMENTATION

Bruger- og vedligeholdelses instruktion

TMP Kran type K, L, XL, KL, LS

Leverandør:
TMP Hydraulik A/S
Suurkjærvej 9
7790 Thyholm DK

Tlf.: +45 9787 1900
Mail: tmp@tmphydraulik.dk

Version 2/2020

Indhold

Introduktion ... 3
Liste over relevante standarder ... 3
1 Original overensstemmelses-/komponent erklæring Original Declaration of Conformity/component ... 4
2 Produktbeskrivelse ... 5
2.1 Type ... 5
2.2 Standard teknisk data: ... 5
2.3 Tilsigtet brug: ... 5
3 Belastning ... 6
3.1 Belastningseksempel ... 6
4 Sikkerhed ... 6
4.1 Sikkerhed for belastning ... 6
4.2 Sikkerhed for brugere ... 7
4.3 Advarsler og andre vigtige forskrifter ... 7
5 Instruktioner ... 8
5.1 Bruger instruktion ... 8
5.1.1 Før ibrugtagning ... 8
5.1.2 Montering/opsætning/klargøring ... 8
5.1.3 Ibrugtagning og brug ... 8
5.1.4 Efter brug ... 8
5.1.5 Nødsituation ... 8
5.2 Vedligeholdelses instruktion ... 9
5.2.1 Lovpligtigt vedligehold ... 9
5.2.2 Jævnlig vedligehold ... 9
5.2.3 Daglig vedligehold ... 10
6 Konklusion ... 10
7 fejlfinding ... 11
8 Hydraulikdiagrammer ... 12
K + KL kran med spil ... 12
LS kran ... 13
L + XL kran med spil ... 14
LS kran med spil ... 15
Bilag indhold ... 16
Translation of original documentation ... 17
Introduction ... 18

1 Original overensstemmelses-/komponent erklæring Original Declaration of Conformity/component 19
2 Product description 20
2.1 Type: 20
2.2 Standard technical data: 20
2.3 Intended use: 20
3 Load 21
3.1 Load example 21
4 Safety 21
4.1 Safety of load 21
4.2 Safety for users 22
4.3 Warnings and other important regulations 22
5 Instructions 23
5.1 User instruction 23
5.1.1 Before use 23
5.1.2 Installation / configuration / preparing 23
5.1.3 Commissioning 23
5.1.4 After use 23
5.1.5 Emergency situation 23
5.2 Maintenance instruction 24
5.2.1 Statutory maintenance 24
5.2.2 Regular maintenance 24
5.2.3 Daily maintenance 25
6 Conclusion 25
7 troubleshooting 26
8 Hydraulic Diagrams 27
K + KL crane with winch 27
LS crane 28
L + XL crane with winch 29
LS crane with winch 30
Appendix content 31

Introduktion

Det er afgørende for sikkerheden, at brugeren læser og forstå denne tekniske redegørelse, med tilhørende bruger- og vedligeholdelsesvejledning.

Der er gennem vejledningen benyttet følgende piktogrammer:

			Xn: Sundhedsskadelig Xi: Lokalirriterende	N: Miljøfarlig	C: Ætsende

Denne tekniske redegørelse indeholder dokumentation for TMP kranen specificeret i kranspecifikationshæftet.

Formålet med dokumentet er at skabe overensstemmelse med nedenstående standarder.

Liste over relevante standarder

Denne liste indeholder standarder, der helt eller delvist er fulgt i fremstillingen.

- *Maskindirektivet 2006/42/EF*
- *DS/EN 13001-3-1*
- *EN 13852-1*

1 Original overensstemmelses-/komponent erklæring
Original Declaration of Conformity/component

Fabrikant/ Manufacturer	TMP Hydraulik A/S
Adresse / Address	Suurkjærvej 9, 7790 Thyholm
Land / Country	Denmark
Telefon nr. / Phone no.	+ 45 97 87 19 00
CVR nr. / company registreings no.	26642078

-Erklære herved at /- Declare that:

Produkt navn / product name:	TMP kran / TMP crane
Type nr. / type no.	TMP K, L, XL, KL og LS

-Er fremstillet i overensstemmelse med eller dele af: • *Maskindirektivet 2006/42/EF* • *DS/EN 13001-3-1* • *EN 13852-1*	***-Is manufactured according to or parts of:*** • *The Machinery Directive 2006/42 / EC* • *DS/EN 13001-3-1* • *EN 13852-1*

Sted og dato / Place and date: Thyholm 07.10.2019

Underskrift og firmastempel / signature and company stamp:

TMP Hydraulik
KRANER, SPECIALMASKINER & LIFTBORE
TLF. 97 87 19 00

TMP Hydraulik A/S, Suurkjærvej 9, 7790 Thyholm DK, eller stedfortræder herfor, har bemyndigelse til at udlevere de tekniske dossier / TMP Hydraulik A / S, Suurkjærvej 9, 7790 Thyholm DK, or its representative, is authorized to hand over the technical files.

2 Produktbeskrivelse

2.1 Type

Navn	TMP marinekran
Type	TMP kran type K, L, XL, KL og LS

2.2 Standard teknisk data:

Kranen er fremstillet i højstyrke stål, som er sandblæst, metalliseret og malet med 2-komponent maling. Alle stempelstænger, bolte og rør er fremstillet i rustfast materiale. Fundament og sving er fyldt med olie for at hindre vand og korrosion. Alle koblinger er som standard belagt med korrosionsbeskyttende tape.

Hvis kranen er udstyret med spil, er der som standard monteret justerbart wiresikringssystem.

2.3 Tilsigtet brug:

TMP marinekranen er designet og fremstillet til montage på fiskerbåde ol. Kranen bruges til at løfte og sænke forskellige byrder hængende i krog.

Kranen skal være godkendt og dimensioneret til at løfte byrden og tilhørende sling/kæder/sjækler osv.

Maksimal byrde for kranen må aldrig overskrides. Er der monteret ekstra tilbehør såsom spil, vil det være dennes max. WLL der er gældende.

Kranen må aldrig anvendes til andre formål, og skal være forsvarligt monteret.

Brug som ikke er i overensstemmelse med brugsanvisningen, involvere farer for operatøren, personer i nærheden og kranen osv. Dette medfører tab af enhver form for ansvar og garanti fra TMP Hydraulik A/S.

3 Belastning

3.1 Belastningseksempel

- Kranen er under normal drift udsat for følgende belastninger. Normal drift vil sige løfte-, sænke- og drejeoperationer foregår i anhugnings krog monteret på kranen.
  - Vertikal og horisontal belastning.
  - Belastningen består af hængende byrde.
  - Belastningen er lodret hængende under kranen.

4 Sikkerhed

- Det er den ansvarlige for arbejdets udførelse, der har ansvaret for at kranen er godkendt og korrekt vedligeholdt, og ikke er til fare for operatører/brugere.
- Det er operatørens ansvar at personlige værnemidler er intakte og bliver anvendt.
- Det er den ansvarlige for arbejdets udførelse, der bærer ansvaret for at alle operatører er korrekt udstyret med personlige værnemidler, samt har adgang til bruger og vedligeholdelsesinstruktionen.
- Ukyndige må ikke betjene kranen.
- Særlig forsigtighed ved brug af kranen i nærhed af el- og højspændingsledninger, kranen er ikke isoleret og der er direkte jordforbindelse gennem kranføreren.

4.1 Sikkerhed for belastning

- Belastningen som nævnt i pkt. 3.1 er sikret ved max WLL som er nævnt i kran specifikationshæftet, og denne må ikke overskrides.
- Det skal tilsigtes at byrden hænger så belastningen bliver ligeligt fordelt vertikal og horisontalt.
- Alle sling/kæder/kroge/wire osv. skal være godkendt til forestående løft og medregnes i byrdens vægt.
- Ved ethvert løft skal byrden og afstanden til kranen kontrolleres jf. kranens løftediagram, se kranspecifikationshæfte. Kranen må ikke hælde mere end 5 grader når fuld kapacitet udnyttes, da stabiliteten forringes væsentligt når kranen hælder.
- Uvedkommende må ikke opholde sig i kranens arbejdsområde.
- Kranen må ikke efterlades belastet.
- Kranen skal betjenes med langsomme og bløde bevægelser.
- Undgå at byrden kommer i sving.
- Kranen må ikke transporteres med hængende byrde, da det kan medføre svære skader på kranen.
- Kranen må ikke anvendes til negativ belastning dvs. bruges som rambuk, vægt eller anden form for tryk mod jorden eller andre genstande.
- Kranen eller dele heraf må ikke støttes af andre redskaber under belastning.
- Hvis kranen er monteret med manuelle arme og andet udstyr, skal disse altid sikres mod overlast og låses med dertil indrettet og godkendt udstyr.

4.2 Sikkerhed for brugere

- Brugeren skal være grundigt instrueret i brugen og anvendelsen af produktet.
- Brugeren skal læse vejledningen grundigt.
- Det er forbudt, og forbundet med livsfare at færdes under hængende byrde.
- Brugeren skal sikre frit udsyn, oversigt og ryddelighed over arbejdsområdet, for at undgå fare og skader.
- Brugeren skal udvise ekstra opmærksomhed ved færden indenfor arbejdsområdet, for at undgå fare og skader.
- Brugeren skal bære personligt beskyttelsesudstyr og værnemidler.
- Der kan på eller omkring kranen og anlægget være skarpe kanter og hjørner, der kan forsage skade/ulykker på ting og personer.

4.3 Advarsler og andre vigtige forskrifter

Hydraulikolie og smørefedt kan være sundheds- og miljøskadelig. Derfor er det vigtig at følge oliefabrikantens anvisninger og tilhørende datablade.

- Fysisk kontakt med olien og fedt kan bl.a. medføre allergi, lungelidelser ol.
- Olielækage under højt tryk, kan medføre betydelige skader på ting og personer.
- Ved opstart af anlæg, hvor sikkerhedsventiler m.m. skal justeres og udluftes, kan der forekomme pludselige oliestråler og -tåger, brug derfor altid egnede værnemidler under arbejdet.
- Ved adskillelse af anlægget, selvom denne er stoppet, kan der forekomme statisk tryk fra akkumulator, komprimeret olie ol. Dette kan medføre pludselige meget varme oliestråler, der kan medføre fare for skoldning/ætsning.
- Ved olielækage skal anlægget stoppes omgående og oliespild skal mindskes mest muligt og indberettes til rette myndighed.

Xn: Sundhedsskadelig
Xi: Lokalirriterende

N: Miljøfarlig

C: Ætsende

Andre vigtige forskrifter!

- Hvis dæksel til tilslutningsboks på elektromotor fjernes og/eller stik på magnetventiler afmonteres, SKAL sikkerheds-/hovedafbryder på elforsyningskabel slukkes og aflåses.
- Al elektrisk tilslutning fx elektromotor, magnetventiler skal foretages af autoriseret el-installatør.

5 Instruktioner

5.1 Bruger instruktion

Det er vigtigt for brugeren at læse og forstå denne bruger og vedligeholdelsesvejledning, af hensyn til brugerens og omgivelsernes sikkerhed og produktets stabilitet og driftssikkerhed.

5.1.1 Før ibrugtagning

Før ibrugtagning skal bruger sikre følgende:

- Læs tilhørende dokumentation på kranen grundigt igennem.
- Ingen synlige skader på kran.
- Alle bevægelige dele skal være frit bevægelige.
- Typeskilt skal være intakt.
- Byrden i det forestående løft skal vurderes mod WLL skilt -se kran specifikationshæftet.

5.1.2 Montering/opsætning/klargøring

- Kranen skal monteres på forsvarligt fundament.
- Tilslut kranen til el/hydraulik. Tilslutningen skal foretages af autoriseret personale.
- Sikre at alt er tilsluttet rigtigt.

5.1.3 Ibrugtagning og brug

- Efter gennemgang af denne dokumentation og montering er kranen klar til brug.
- Se betjeningsvejledninger på div. I bilag

5.1.4 Efter brug

- Kranen tjekkes for evt. fejl.
- Kranen pakkes sammen og placeres i parkeringsbeslag.
- Skal kranen stå ubenyttet i længere tid, køres alle cylindere sammen og alle ikke malede dele påsmøres med olie.

5.1.5 Nødsituation

- Ved en nødsituation skal kranen omgående bringes til standsning og situationen skal vurderes af den ansvarlige for arbejdets udførelse.
- Byrden sænkes til jorden, hvis dette ikke forværre situationen.
- Interne retningslinjer for ulykker/nødsituationer følges.

5.2 Vedligeholdelses instruktion

Det er vigtigt at følge nedenstående service/vedligeholdelses instruktioner, da det er medvirkende til at øge driftssikkerheden.

5.2.1 Lovpligtigt vedligehold

- Kranen skal som minimum efterses og godkendes en gang hver 12 måned.
- Eftersynet skal foretages af en kvalificeret/sagkyndig person.
  Kontakt evt. **TMP Hydraulik A/S på tlf. +45 97 87 19 00.**

5.2.2 Jævnlig vedligehold

- Olie og filterskift foretages minimum én gang årligt, eller ved konstant og hård belastning op til 4 gange årligt. Her anbefaler vi Texaco HDZ32 eller tilsvarende.
- For at opnå optimal levetid, bør snavs i olien undgås. Da der under indkøringen og opstarten produceres en mængde afslidte partikler fra alle bevægelige dele, bør anlægget derfor ikke fuldt belastes før alt snavs er separeret fra i filterne, som skiftes minimum én gang årligt.
- Ved lave temperaturer (under +10 grader) skal alle funktioner køres igennem nogle gange, så hydraulikolien varmes op.
- Kontroller korrekt påfyldning og stand af olien.
- Kontroller anlægget, komponenter, slanger, fittings, ekstra udstyr osv. for olielækager, fejl, brud osv. Og efterspænd.
- I tilfælde af uheld eller fejl, skal beskadigede slanger, rør, wire m.m. udskiftes straks.
- Overtryksventilen er forsejlet til angivet tryk beskrevet i tilhørende kran specifikationshæfte. Trykket på overtryksventilen må ikke justeres til større tryk end angivet. Justering må kun foretages af kvalificeret personer.

Bemærk: Pumpen ændrer ofte lyd, når olien er suget rigtigt an og varm.

- Alle nipler gennemsmøres jævnligt, her anbefaler vi EP2, hvis fedtet ikke kan presses igennem niplerne, kontaktes et autoriseret værksted.
- Udskudsarme skal altid være belagt med fedt EP2, se smørings oversigt i kran specifikationshæftet.
- Alle stempelstænger holdes rene for snavs og olieres let.
- Udluftning af systemet
  luft i hydraulik systemet forårsager unormalt stort slitage samt funktionsproblemer, det er derfor vigtigt at dette gøres omhyggeligt. Pumpen startes og alle udluftningsventiler åbnes og alle højt placerede fittings og forskruninger løsnes en ad gangen, disse lukkes igen når ren luft- og skumfri olie trænger ud. Alle retningsventiler betjenes en efter en flere gange, indtil olien i tanken er luft- og skumfri. Hver funktion aktiveres indtil den kører fejlfrit med jævn rotation eller lineær bevægelse. Udluftningen foretages indtil alt er skumfrit, og der ikke optræder megen støj fra systemet, hvilket ofte er et tegn på mere luft, hvorefter udluftningen forsættes. Hyletoner fra pumpen er et typisk tegn på luft i olien.

5.2.3 Daglig vedligehold

- Dokumenter tilhørende kranen skal altid forefindes sammen med kranen, og skal mod forlangende kunne forevises for relevant myndighed.
- Visuel kontrol for revner og misdannelser i svejsninger og materialet. Hvis der findes noget, må kranen ikke anvendes inden den er vurderet af en kvalificeret/sagkyndig person.
  Kontakt evt. TMP Hydraulik A/S på tlf. +45 97 87 19 00.
- Visuel kontrol af tilhørende løfteudstyr, som sjækler, sling, kæder, bolte osv. Der skal anvendes godkendt løfteudstyr. Hvis udstyret ikke er lovpligtig godkendt, må udstyret ikke anvendes inden udstyret er godkendt eller udskiftet med godkendt udstyr.
  Kontakt evt. TMP Hydraulik A/S på tlf. +45 97 87 19 00.
- Alle bevægelige dele skal kontrolleres for funktionalitet, dvs. bevægelige dele skal til enhver tid være fuldt funktionsdygtige.
- Kontroller at bolte, møtrikker, dorne osv. er fastspændte.
- Ved udskiftning af rør, bolte, kroge, wire osv. skal det sikres at ombytningen sker med tilsvarende kvalitet eller bedre.
- For at undgå korrosion bør malingen altid være intakt og vedligeholdt.
- Ved tab eller beskadigelse af typeskilt, må kranen ikke anvendes før den er positivt identificeret og skiltet er reetableret.
  Kontakt evt. TMP Hydraulik A/S på tlf. +45 97 87 19 00.

6 Konklusion

- Kranen er analyseret med henblik på at imødegå de stillede krav. Det konkluderes at kranen lever op til de stillede krav og er sikker at anvende, såfremt brugeren overholder brugs- og sikkerhedsanvisningerne, og ikke overskrider max WLL, som er nævnt i kran specifikationshæftet, eller foretager ændringer på kranen eller tilbehør hertil.
- Brug og afvigelser fra dette dokument, bortfalder straks enhver garanti givet af TMP Hydraulik A/S.

7 fejlfinding

Kranen kan ikke køre.	Tjek tilslutningen hydraulik/el og olieniveau i tanken. Pumpen suger luft. Kontakt autoriseret reparatør.
Kranen har ujævne bevægelser.	
Pumpen støjer.	

Kranen køre i ryk.	Luft i olien. For lidt olie i tanken. Forsnævring i hydrauliksystemet.
Olien skummer.	
Olien overophedes.	
Støj i hydrauliksystemet.	
Slangerne slår eller vibrerer.	

Kranen kan ikke løfte fuld last.	Kontakt autoriseret reparatør.

Én ventilfunktion går ikke i neutral.	Håndtagshus på ventil smøres
	Kontakt autoriseret reparatør.

Én ventilfunktion vil ikke køre.	Tjek ledning til el modul
	Tjek om håndtag på ventil giver udslag.
	Kontakt autoriseret reparatør.

Kranen har nedsat løfteevne.	Kontakt autoriseret reparatør.
Kranbevægelser er langsomme.	
Udskud vil ikke køre.	
Hovedtryk svinger kraftigt op og ned.	

Kranen synker ved belastning.	Defekt lastholderventil Kontakt autoriseret reparatør.
Kranen blokerer under sænkning	

Knæklyde fra cylinderne	Stempelstænger er tørre. Afhjælpes ved at påføre stempelstængerne lidt olie.
Knæklyde fra kranarmens lejebolte, når kranen belastes	Foretag smøring af lejebolte.

Udskudsarme har stor nedbøjning ved belastning.	Slidplader slidt og skal udskiftes.

Olie løber ud af top fundament forsaget af vand i fundament.	Fjern bundprop, lad vand løbe ud indtil der kommer olie, og monter bundprop.
Olie løber ud af top fundament forsaget af utæt drejecylinder.	Fjern bundprop, og der kommer olie. Drejecylindere utæt. Kontakt autoriseret reparatør.

Wire på spil bygger sig op i den ene side af tromlen.	Afstand mellem spil og wireblok er for kort.
	Krogvægt er for lille, så krogvægten ikke kan holde wiren stram.

8 Hydraulikdiagrammer

K + KL kran med spil

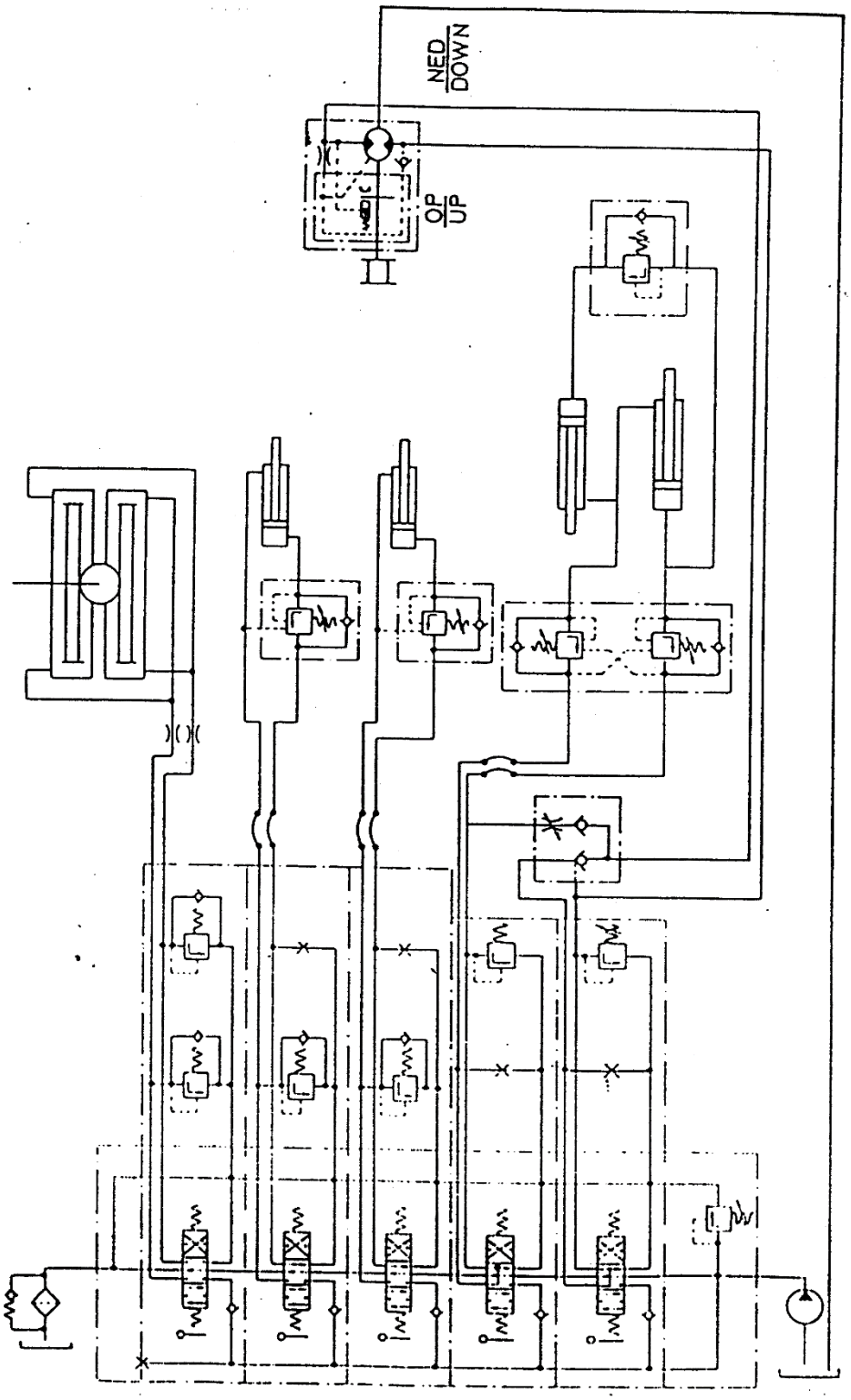

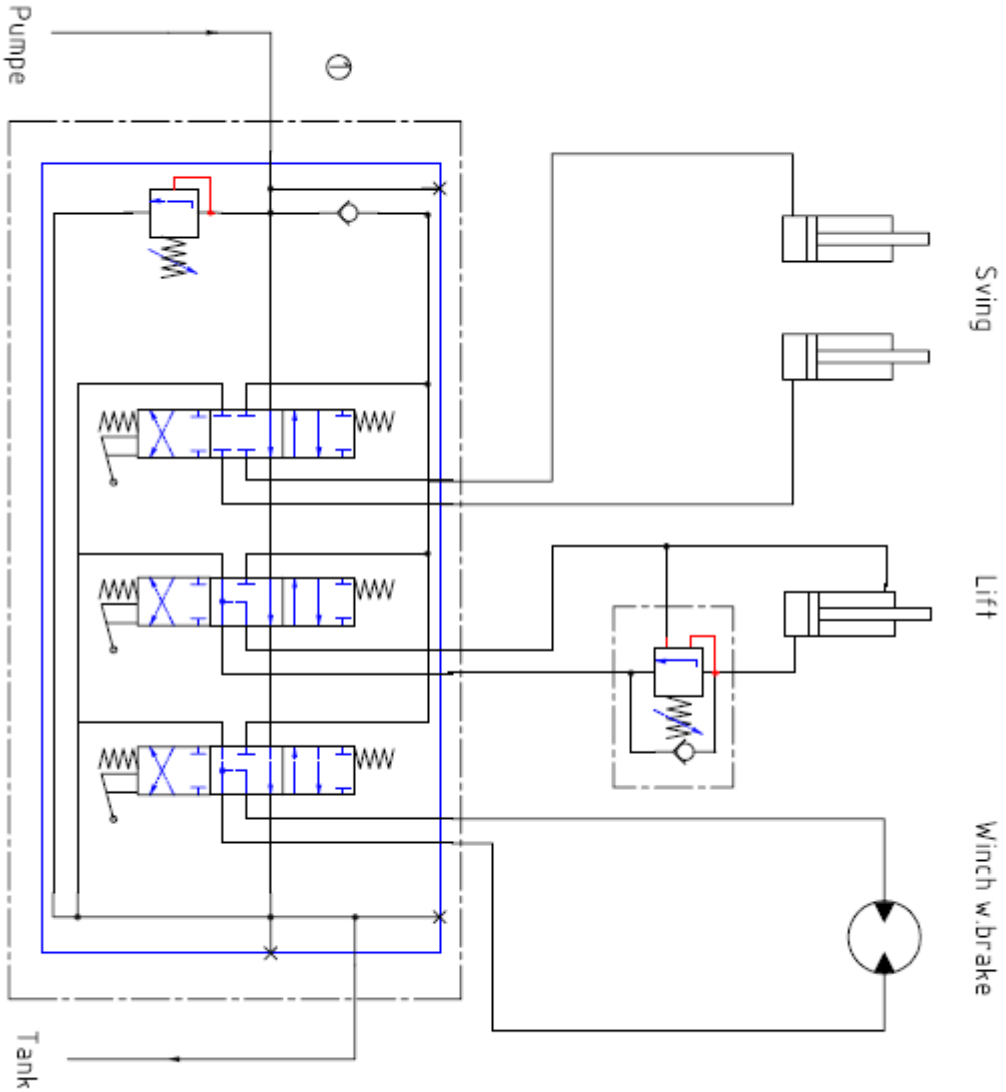
Sving
Lift
Winch w.brake
Pumpe
Tank

L + XL kran med spil

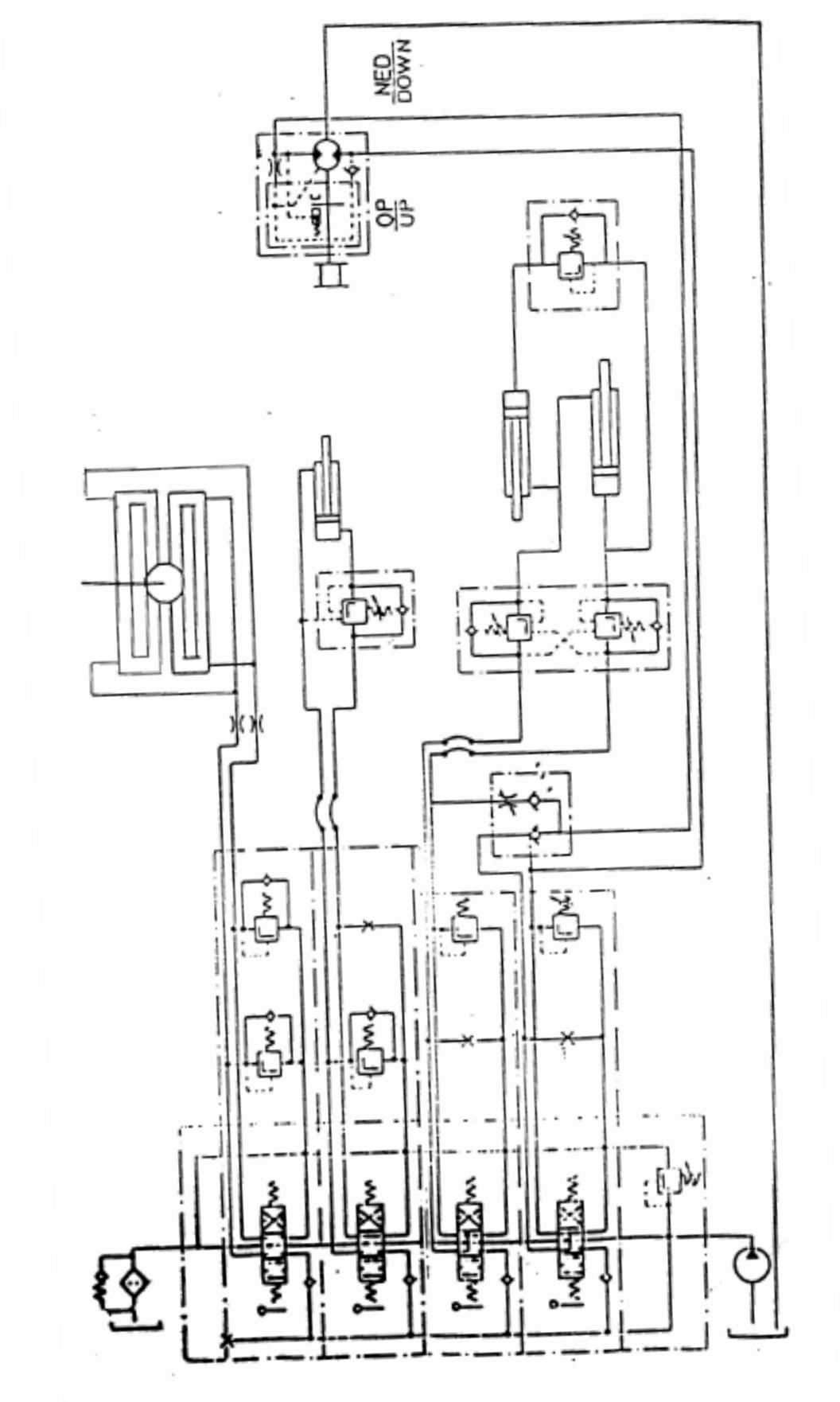

LS kran med spil

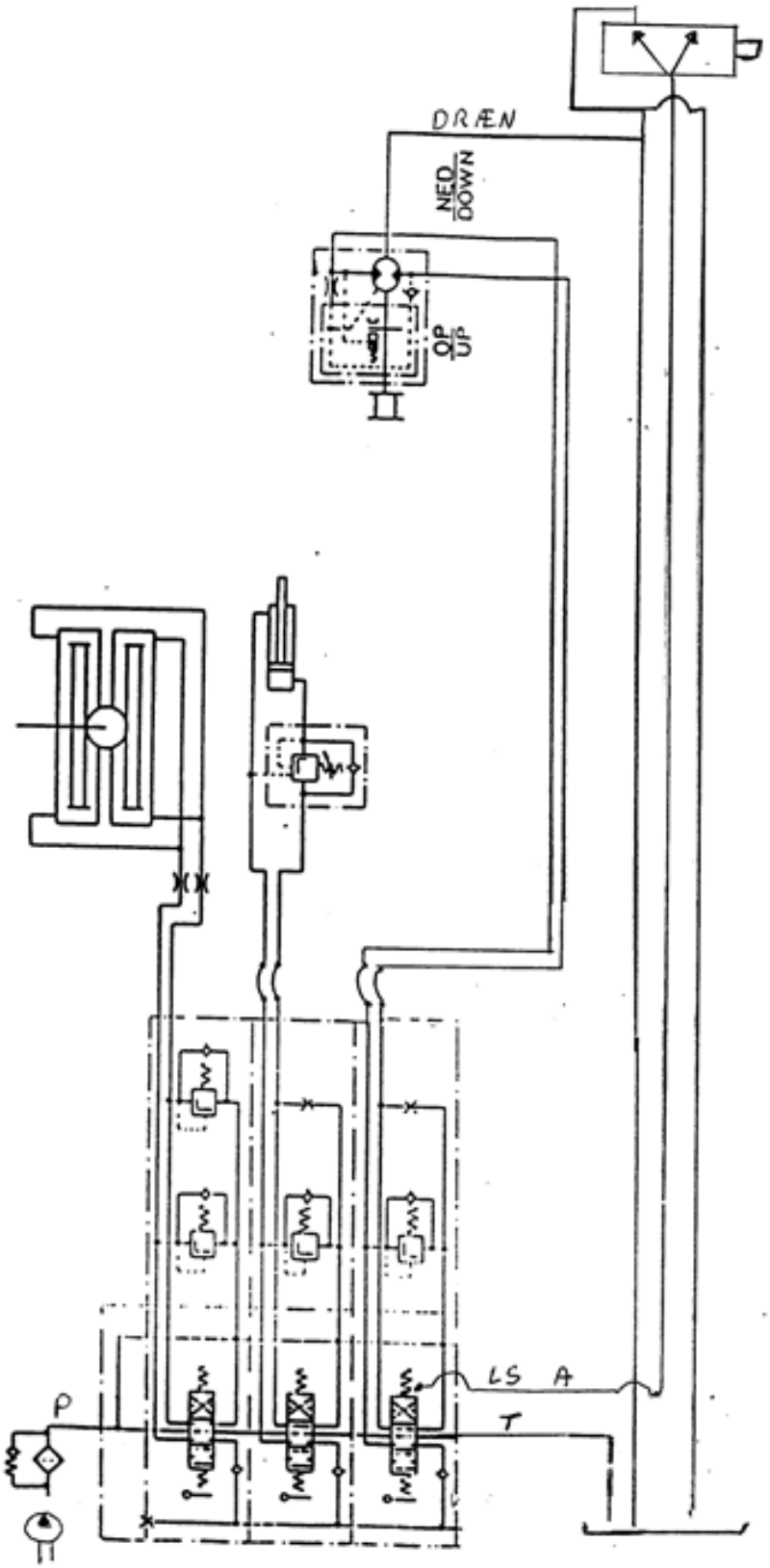

Bilag indhold

Bilag indeholder tekniske data og datablade fra benyttede underleverandører på fx pumpe, ventiler, fjernstyring, spil osv.

Bilag 1
Scanreco fjernstyring

Bilag 2
Ventil

Bilag 3
Spil

Bilag 4
Drejekrans

Bilag 5
Svinggear

GB

Translation of original documentation

Use and maintenance instructions

TMP Kran type K, L, XL, KL, LS

Supplier:

TMP Hydraulik A/S
Suurkjærvej 9
7790 Thyholm
Denmark

Phone: +45 9787 1900
Mail: tmp@tmphydraulik.dk

Version 2/2020

Introduction

It is essential for the safety that the user reads and understands this user manual, and its maintenance instructions.

The following pictograms have been used through the guide:

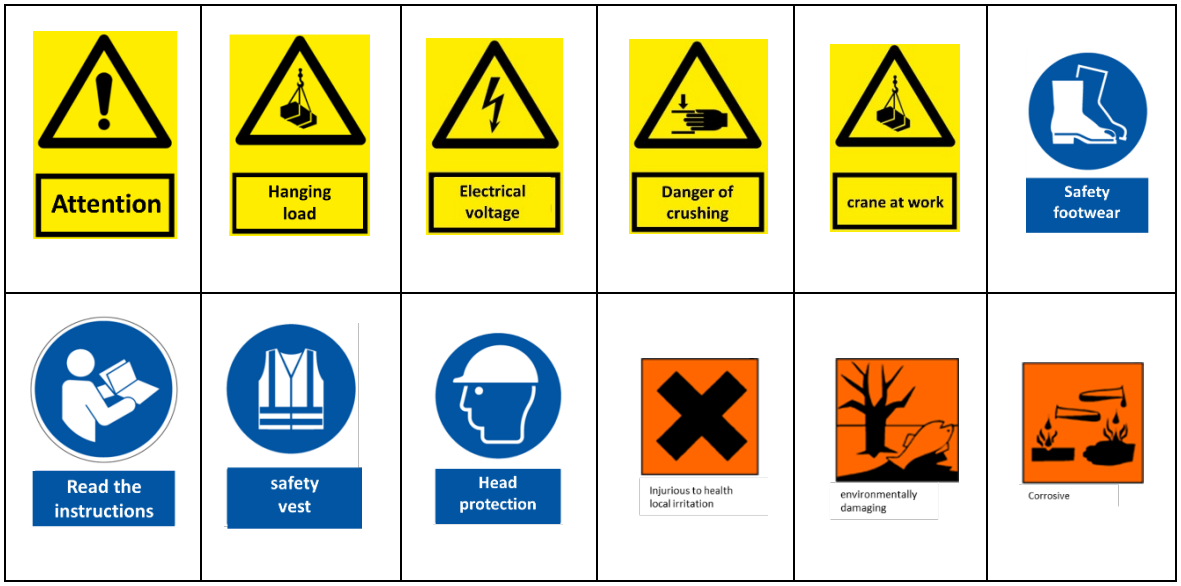

This instruction manual contains documentation for the product described in crane specifications book.

The purpose of the document is to conform to the standards below.

List of relevant standards

This list includes standards that completely or partly are followed in the manufacturing.

- *Maskindirektivet 2006/42/EF*
- *DS/EN 13001-3-1*
- *EN 13852-1*

1 Original overensstemmelses-/komponent erklæring
Original Declaration of Conformity/component

Fabrikant/ Manufacturer	TMP Hydraulik A/S
Adresse / Address	Suurkjærvej 9, 7790 Thyholm
Land / Country	Denmark
Telefon nr. / Phone no.	+ 45 97 87 19 00
CVR nr. / company registreings no.	26642078

-Erklære herved at /- Declare that:

Produkt navn / product name:	TMP kran / TMP crane
Type nr. / type no.	TMP kran K, L, XL, KL og LS

-Er fremstillet i overensstemmelse med eller dele af: • *Maskindirektivet 2006/42/EF* • *DS/EN 13001-3-1* • *EN 13852-1*	***-Is manufactured according to or parts of:*** • *The Machinery Directive 2006/42 / EC* • *DS/EN 13001-3-1* • *EN 13852-1*

Sted og dato / Place and date: Thyholm 07.10.2019

Underskrift og firmastempel / signature and company stamp:

Martin Godiksen

TMP Hydraulik
KRANER, SPECIALMASKINER & LØFTEBREJ
TLF. 97 87 19 00

TMP Hydraulik A/S, Suurkjærvej 9, 7790 Thyholm DK, eller stedfortræder herfor, har bemyndigelse til at udlevere de tekniske dossier / TMP Hydraulik A / S, Suurkjærvej 9, 7790 Thyholm DK, or its representative, is authorized to hand over the technical files.

2 Product description

2.1 Type:

Name	TMP Sea crane
Type	TMP kran type K, L, XL, KL og LS

2.2 Standard technical data:

The crane is made of high-strength steel, which is sandblasted, metallized and painted with 2-component paint. All piston rods, bolts and pipes are made of stainless steel. Foundation and swing are filled with oil to prevent water and corrosion. All couplings are coated with corrosion protection tape as standard.

If the crane is equipped with winches, an adjustable wire protection system is fitted as standard.

2.3 Intended use:

The TMP marine crane is designed and manufactured for mounting on fishing boats.

The crane is used to lift and lower various loads hanging in the hook.

The crane must be approved and dimensioned to lift the load
and associated sling / chains / shackles, etc.

The maximum load on the crane must never be exceeded. If additional accessories such as winch are fitted, it will be the winchs max. WLL that applicable

The crane must never be used for other purposes and must be securely mounted.

Use that does not comply with the instructions for use may involve hazards to the operator, persons nearby and the crane, etc.
And this will result the loss of any form of responsibility and guarantee from
TMP Hydraulik A/S.

3 Load

3.1 Load example

The crane is in normal operation, exposed to the following stress. Normal operation means lifting and lowering operations are carried out in hook mounted on the crane.

- Vertical and horizontal load.
- The load consists of hanging load.
- The load is vertically suspended below the product.

4 Safety

- It is the person in charge of the work who is responsible for ensuring that the product is approved and properly maintained and does not endanger operators / users.
- It is the operator's responsibility that personal protective equipment is intact and used.

- It is the person in charge of the work who is responsible for ensuring that all operators are properly equipped with personal protective equipment and have access to the user and maintenance instructions.
- Unauthorized persons must not operate the product.
- Particular caution when using the product around power and high voltage cables, the product is not insulated and there is direct grounding through the operator.

4.1 Safety of load

- The load as mentioned in point 3.1 is assured by max WLL as mentioned in crane specifications book, this must not be exceeded.
- It must be ensured that the load hangs so that the load is evenly distributed vertically and horizontally.
- All loops / chains / hooks / wire etc. must be approved for upcoming lifting and be included in the weight of the load.

- For each lift, the load and distance to the crane must be checked according to the crane lift diagram, crane specifications book. The crane must not tilt more than 5 degrees when full capacity is utilized, as stability decreases significantly when the crane is inclined.
- Unauthorized persons must not stay in the crane's working area.
- Do not leave the crane loaded.

- For every lift, the load and distance must be checked, according to the lifting diagram
- Unauthorized persons must not be in the work area of the product.
- Do not leave the product loaded.
- Avoid the load from swinging.

- The product must not be used for negative load i.e. used as pile driver, weight or other kind of pressure against the ground or other objects.
- The product or parts may not be supported by other equipment under load.
- If you installed other equipment, always be protected against overload and locked with dedicated and approved equipment.

4.2 Safety for users

- The user must be thoroughly instructed in the use and application of the product.
- The user must read the instructions carefully.
- It is forbidden and associated with life-threatening to go under hanging burden.
- The user must ensure a clear view, overview and tidiness of the work area to avoid danger and damage.
- Users should show extra attention when moving within the work area to avoid danger and damage.
- The user must wear personal protective equipment.
- There may be sharp edges and corners on the product that can cause damage / accidents to things and persons.

4.3 Warnings and other important regulations

Hydraulic oil and grease can be harmful to health and the environment. Therefore, it is important to follow the oil manufacturer's instructions and data sheets.

- Physical contact with the oil and grease can cause allergies, lung disorders, etc.
- High pressure oil leakage can cause significant damage to objects and persons.
- When starting up installations where safety valves etc. must be adjusted, Watch out for sudden oil jets. use protective equipment.
- If the system must be disconnected, even if it has been stopped, static pressure may occur from the accumulator, compressed oil, etc. This can cause sudden very hot oil jets that can cause scalding / caustic of the skin.
- In case of oil leakage, the system must be stopped immediately and oil spills must be reduced as much as possible and reported to the correct authority.

Injurious to health
local irritation

environmentally
damaging

Corrosive

Other important regulations!

- If the cover for the connection box on the electric motor is removed and / or the plug on the solenoid valves is removed, the safety / main switch on the power supply cable MUST be switched off and locked.
- All electrical connections, e.g. electric motor, solenoid valves, must be made by an authorized electrician.

5 Instructions

5.1 User instruction

It is important for the user to read and understand this user and maintenance manual, for the sake of the safety of the user and the environment and the stability and operation of the product.

5.1.1 Before use

Before use the user must ensure:

- Read the documentation on the product carefully.
- No visible damage to the product.
- All moving parts must be freely movable.
- The name/type plate must be intact.
- The load in the upcoming lift must be estimated to WLL described in crane specifications book.

5.1.2 Installation / configuration / preparing

- The crane must be mounted in a secure foundation.
- Connect the crane to electrical / hydraulic. The connection must be made by authorized personnel.
- Make sure everything is connected properly.

5.1.3 Commissioning

- After reading the documentation and mounting the crane, the crane is ready for use.
- See operating instructions to various accessories in appendix

5.1.4 After use

- Check the crane for any errors and damage.
- Pack the crane and place in parking position.
- If the crane is left unused for a long time, all cylinders are driven together, and all unpainted parts are lubricated with oil.

5.1.5 Emergency situation

- In case of an emergency, the product must be stopped immediately, and the situation must be estimated by the person responsible for the work.
- The burden is lowered to the ground, without making the situation worse.
- The Internal guidelines for accidents / emergencies must be followed.

5.2 Maintenance instruction

It is important to follow the service / maintenance instructions below, this helps to increase reliability.

5.2.1 Statutory maintenance

- The product must be inspected and approved at least once every 12 months.
- The Inspection must be carried out by a qualified / expert person.
  You can contact TMP Hydraulik A / S +45 97 87 19 00.

5.2.2 Regular maintenance

- Oil and filter must be changed at least once a year, or in constant and heavy loads up to 4 times a year. Here we recommend Texaco HDZ32 or equivalent.
- For optimum life, dirt in the oil should be avoided. Therefore, since during run-in and start-up, a large amount of worn particles are produced from all moving parts, the system should not be fully loaded until all dirt is separated from the filters, which is changed at least once a year.
- At low temperatures (below +10 degrees), all functions must be run through, to heat the hydraulic oil.
- Check the correct filling and condition of the oil.
- Check the system, components, hoses, fittings, additional equipment etc. for oil leaks and tighten.
- In case of accident, damaged hoses, pipes, wire etc. must be replaced immediately.
- The overpressure valve is sealed to the specified pressure described in the corresponding crane journal / certificate. The pressure on the pressure relief valve must not be adjusted to greater pressure than indicated. Adjustment may only be made by qualified persons.

  Note: The pump often changes sound when the oil is properly and warm.

- All nipples are greased regularly, here we recommend EP2, if the grease cannot be pushed through the nipples, contact an authorized workshop.
- Extension arms must always be coated with grease EP2, see lubrication table in crane specificationbook.
- All piston rods are kept clean of dirt and lightly oiled.
- Venting the system
  Air in the hydraulic system causes abnormally large wear and function problems, so it is important to do this carefully. The pump is started, and all venting valves are opened and all high-placed fittings and gaskets are loosened one at a time, these are closed again when clean air and foam-free oil penetrate. All directional valves are operated one by one several times until the oil in the tank is air and foam free. Each function is activated until it runs smoothly with smooth rotation or linear motion. The venting is continued until the oil is foam-free and there is no discord from the system, which is often a sign of more air, after which the venting is continued. Whistling sounds from the pump are a typical sign of air in the oil.

5.2.3 Daily maintenance

- Documents belonging to the crane must always be provided with the crane and must be presented to the relevant authority by request.
- Visual inspection for cracks and deformities in welds and material. If something wrong the product must not be used before it is evaluated by a qualified / competent person.
  Contact TMP Hydraulik A/S +45 97 87 19 00.
- Visual inspection of associated lifting equipment, such as shackles, sling, chains, bolts, etc. only approved lifting equipment must be used. If the equipment is not legally approved, the equipment must not be used before it is approved or replaced with approved equipment.
  Contact TMP Hydraulik A/S +45 97 87 19 00.
- All moving parts must be checked for functionality, i.e. moving parts must always be fully functional.
- Check that bolts, nuts, mandrels, etc. are tightened.
- When replacing pipes, bolts, hooks, wire, etc., it must be ensured that the replacement takes place with similar quality or better. See spare part list / drawing in appendix.
- To avoid corrosion, the paint should always be intact and maintained.
- In case of loss or damage to the name/type plate, the product should not be used until it has been positively identified and the plate is re-established.
  Contact TMP Hydraulik A/S +45 97 87 19 00.

6 Conclusion

- The crane has been analyzed in order to the requirements settings. It is concluded that the product complies with the requirements and is safe to use, if the user complies with the use and safety instructions and does not exceed the maximum WLL mentioned in crane specifications book. or make changes to the crane or its accessories.
- Use and deviations from this document will immediately cancel any guarantee given from TMP Hydraulik A/S.

7 troubleshooting

The crane cannot run.	Check the hydraulic / electricity connection and oil level in the tank. The pump sucks air. Contact authorized service center.
The crane has irregular movements.	
The pump makes noise.	

The crane run in jerky.	Air in the oil. Too little oil in the tank. Narrowing in the hydraulic system.
The oil foams.	
The oil overheats.	
Noise in the hydraulic system.	
The hoses strike or vibrate.	

The crane cannot lift full load.	Contact authorized service center.

One valve function does not go into neutral.	Lubricate handle housing on valve.
	Contact authorized service center.

One valve function will not run.	Check cable for electrical module
	Check the handle on the valve has an impact.
	Contact authorized service center.

The crane has reduced lifting capacity.	Contact authorized service center.
Crane movements are slow.	
Extending arms will not run.	
Main pressure varies up and down.	

The crane falls under load.	Defective load carrier valve Contact authorized service center.
The crane blocks during lowering	

Creaking sounds from the cylinders	Piston rods are dry. To remedy, apply a little oil to the piston rods.
Cracking noises from the crane arm bearing bolts when the crane is loaded	Lubricate the bearing bolts.

Extension arms have great deflection at load.	Wear plates worn and need to be replaced.

Oil flows out of the top foundation caused by water in the foundation.	Remove bottom plug, allow water to drain until oil comes, and install bottom plug.
Oil flows out of the top foundation caused by leaky rotation cylinder.	Remove bottom plug and oil will come. Rotary cylinders leaking. Contact authorized service center.

Wire at stake builds up on one side of the drum.	Distance between winch and wire block is too short.
	The hook weight is too small, so the hook weight cannot keep the wire tight.

8 Hydraulic Diagrams

K + KL crane with winch

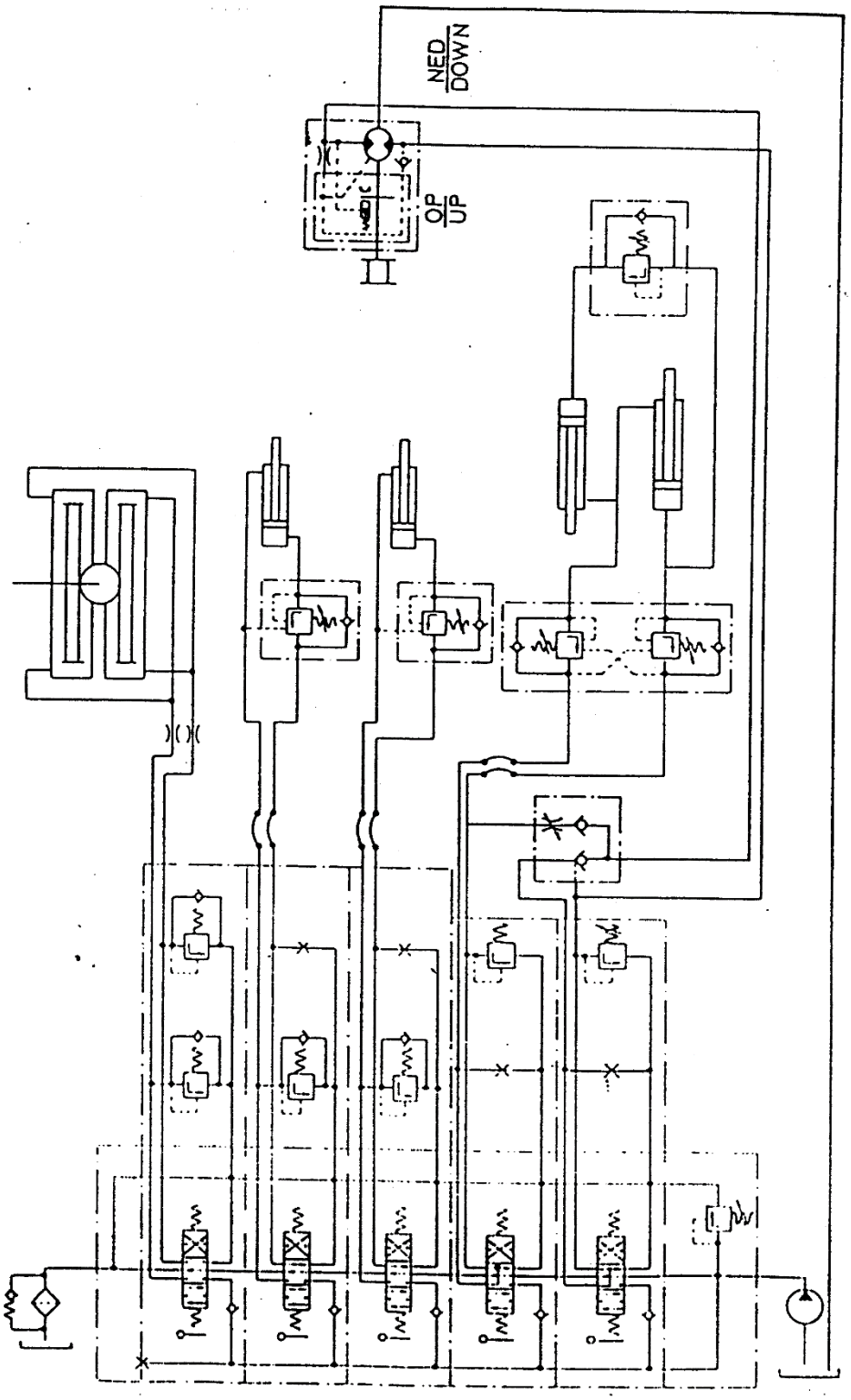

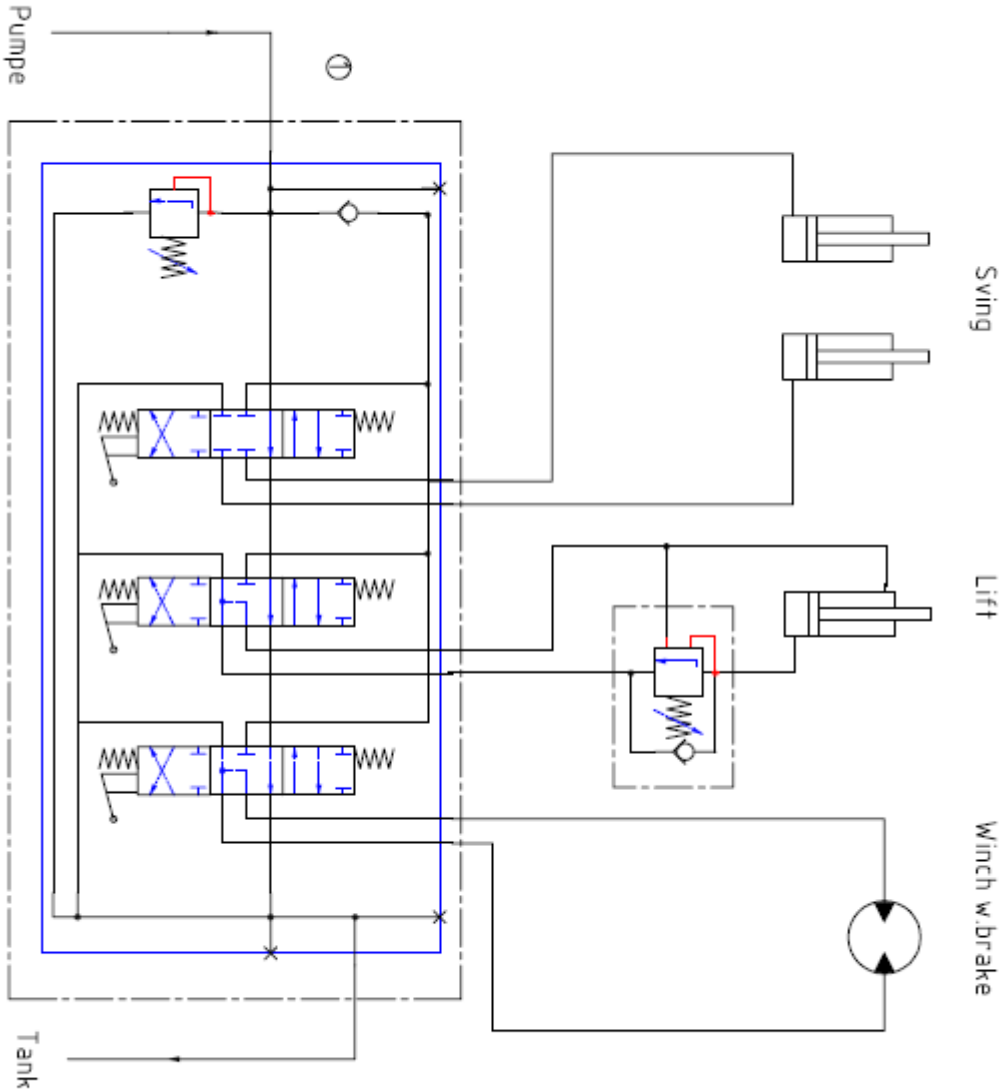
Sving
Lift
Winch w.brake
Pumpe
Tank

L + XL crane with winch

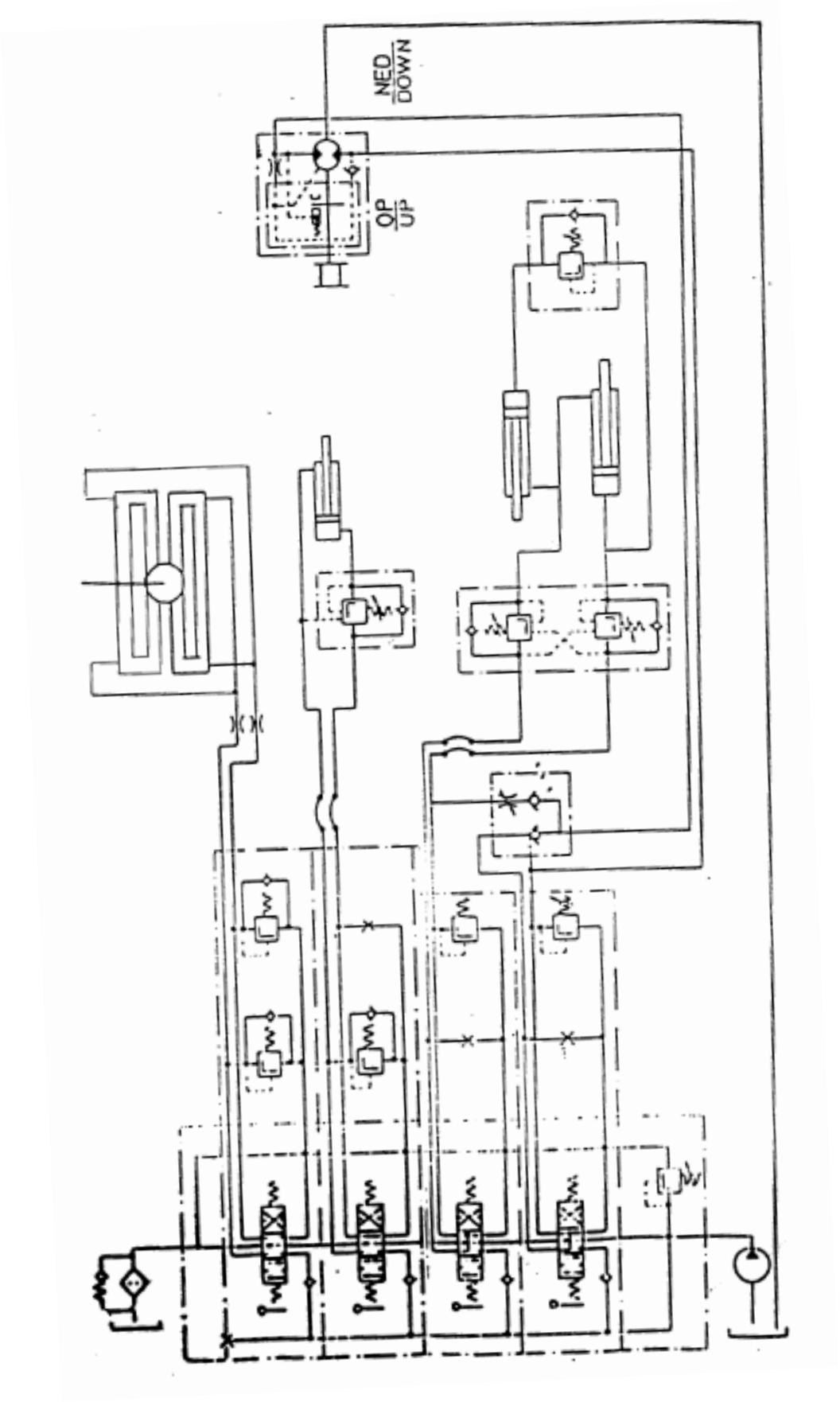

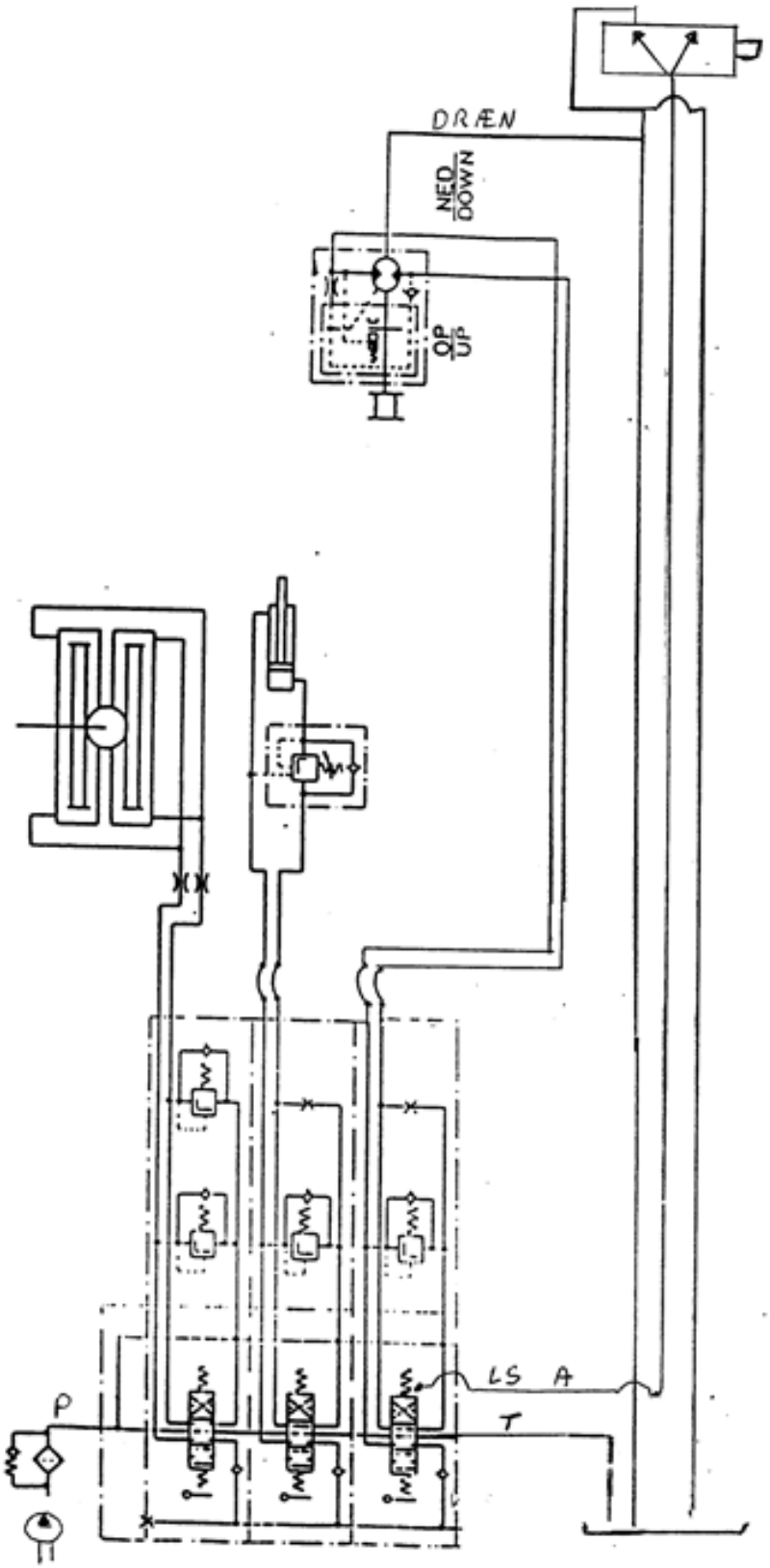
DRÆN
NED
DOWN
OP
UP
LS
A
P
T

Appendix content

Appendix contains technical data and data sheets from used subcontractors on eg pump, valves, remote control, winch etc.

Appendix 1
Scanreco remote

Appendix 2
Valve

Appendix 3
Winch

Appendix 4
Slewing ring

Appendix 5
Gear motor

Bilag 1

SCANRECO
Radio Remote Control

Betjeningsvejledning
Fjernbetjeningssystem Scanreco RC-400

Document	Revision	Language
66038	C	Dansk

Bilag 1

Indhold

1 Generelt 3
1.1 Terminologi 3
2 Forord 4
2.1 Generelle oplysninger 4
3 Generel systembeskrivelse 5
3.1 Skematisk oversigt over Scanreco RC-400 5
3.2 Generel beskrivelse af Scanreco RC-400 6
3.3 Den bærbare kontrolenhed (PCU) 7
3.4 Centralenhed (CU) 13
3.5 Ventil- og tilslutningskabler 15
3.6 Funktionsboks for kranstop (ekstraudstyr) 19
3.7 Batteri 20
3.8 Batterioplader og batteriopladning 22
4 Sikkerhedsbestemmelser og betjeningsanvisninger 25
4.1 Sikkerhedsbestemmelser 25
4.2 Betjeningsanvisninger 26
5 Installationsanvisninger 27
5.1 Generel oversigt over RC 400 27
5.2 Vigtig bemærkning under svejsning 27
5.3 Placering af centralenheden 27
5.4 Anbefalinger for montering 28
5.5 Monteringsvejledning for kabelsæt 29
6 Fejlfinding 31
6.1 Generelle oplysninger 31
6.2 Angivelser på den bærbare kontrolenhed 31
6.3 Angivelser på centralenheden 33
6.4 Systemet fungerer ikke 35
7 Programmering af parametre og indstillinger 36
7.1 Generel beskrivelse 36
7.2 Autorisationsniveau 1 37

Alle rettigheder forbeholdes.

Design, udstyr, tekniske data and specifikationer kan blive ændret eller forbedret uden varsel. Teksten i denne vejledning eller nogen del heraf må ikke reproduceres eller overføres i nogen form eller på nogen måde, elektronisk eller mekanisk, herunder fotokopiering, optagelse, lagring i et datalagringssystem, eller på anden vis uden forudgående skriftlig tilladelse fra Scanreco AB, Sverige.

Dokumentoplysninger

Attribut	Information
Dokumenttype	Vejledning
Titel	Betjeningsvejledning
Undertitel	Fjernbetjeningssystem Scanreco RC-400
Dokumentnummer	66038
Revision	C
Revisionsdato	25-09-2009

Revisionshistorik

Revision	Dato	Navn	Bemærk
A	09-12-2008	SCANRECO AB	Første udgave af dokument
B	15-06-2009	SCANRECO AB	
C	25-09-2009	SCANRECO AB	

1 Generelt

1.1 Terminologi

Forkortelse	Beskrivelse
PCU	Bærbar kontrolenhed
CU	Central enhed
LED	Lysdiode
DV	Vippeventil

2 Forord

2.1 Generelle oplysninger

Denne vejledning er beregnet som et supplement til kran/maskinvejledningen og dækker Scanreco RC 400 Fjernbetjeningssystem.

Scanreco RC 400 tilbyder føreren et ekstremt avanceret fjernbetjeningssystem med optimal hastighed, præcision, styring og sikkerhed.

Af hensyn til din sikkerhed og holdbarheden af din kran/maskine skal du læse og sætte dig ind i disse instruktioner. På denne måde kan du hurtigt lære det nye fjernbetjeningssystem at kende og finde ud af, hvordan du bedst udnytter det.

- Fjernbetjente kraner kan kun betjenes af kvalificerede medarbejdere. Føreren skal være opmærksom på indholdet af kapitel 4 "Sikkerhedsbestemmelser og betjeningsanvisninger", før enheden betjenes. Der kan forekomme alvorlige ulykker, hvis disse anvisninger ikke bliver fulgt.
- For at beskytte den bærbare kontrolenhed mod skader og af sikkerhedsmæssige hensyn, skal kontrolenheden opbevares i et lukket skab.
- Følg anvisningerne i kranvejledningen angående flytning af kranen fra parkeringspositionen, optimal armplacering under håndtering af last og parkering af kranen.
- På grund af de ubegrænsede variationer af kraner, maskiner, genstande, køretøjer og udstyr, som fjernbetjeningssystemet kan bruges til, og de utallige standarder, som ofte udsættes for varierende fortolkninger, er det umuligt for medarbejderne hos Scanreco at tilbyde ekspertrådgivning angående en given fjernbetjenings egnethed til et bestemt formål. Det er køberens ansvar at konstatere ethvert Scanreco-fjernbetjeningsprodukts egnethed til et tilsigtet formål og sikre, at det er installeret og afskærmet ifølge alle nationale, føderale, statslige, lokale og private sikkerheds- og sundhedsmæssige bestemmelser, koder, standarder og Scanreco-anbefalinger (denne vejledning). Hvis Scanreco RC 400 skal anvendes i et sikkerhedsmæssigt kritisk formål, skal kunden/føreren foretage relevant test og evaluering for at forhindre skader på den endelige bruger. Scanreco tager ikke ansvaret for eventuelle skader eller personskader.
- Uautoriseret håndtering af Scanreco ophæver automatisk garantien.

Til operatøren:

Hold en kort pause og tag dig tid til at læse kapitel 3 (Generel systembeskrivelse) og 4 (Sikkerhedsbestemmelser og betjeningsanvisninger).

Til installatøren:

Hold en pause og tag dig tid til at læse kapitel 5 (Installationsanvisninger) og "Inspektions-/installationsdokumenter".

3 Generel systembeskrivelse

3.1 Skematisk oversigt over Scanreco RC-400

Skematisk oversigt over Scanreco RC-400.

Leveringens generelle omfang (se din specifikation og Figur 3.1).

Nr.	Beskrivelse	Antal
1	Bærbar kontrolenhed (PCU)	1
2	Centralenhed (CU)	1
3	Batterioplader	1
4	Batterikassette (NiMH 7.2 VDC)	2
5	Manøvreringskabel (10 meter)	1
6	Nødstopboks (ekstraudstyr)	1
7	Kabelsæt med forsyningskabler + digitale udgange	1
8	Kabelsæt med ventilkabler (analoge udgange)	1

3.2 Generel beskrivelse af Scanreco RC-400

Scanreco RC 400-fjernbetjeningssystemet er udviklet specielt til hydraulisk drevne mobilkraner og maskiner. Systemet er et digitalt fjernbetjeningssystem, der er baseret på en ekstremt avanceret mikroprocessorteknologi. Flere års udmattende og krævende tests har vist, at fjernbetjeningssystemet kan klare selv de mest barske forhold.

Systemet er beskyttet mod elektromagnetisk og radiofrekvensudstråling og kan installeres på alle hydraulikventiltyper (strømspænding, aktuel pulsbredde eller protokolstyring), som findes på markedet.

I sin grundlæggende form består fjernbetjeningssystemet af en bærbar kontrolenhed med styregreb til proportional styring og kontakter til tænding/slukning af funktioner, en centralenhed med tilslutningskabel til brug af proportionale elektrohydrauliske kontrolenheder med skyderindstilling.

Digitalt kodede kontroloplysninger (håndtagsafvigelse og kontaktposition) sendes fra kontrolenheden via et elektrisk kabel eller via radio til centralenheden. Kontrolenheden og centralenheden oversætter omfanget og retningen for styregrebets afvigelser og kontaktpositioner til den tilsvarende ventilfunktion, hastighed og retning og dermed kranens bevægelser.

Vigtig bemærkning:

Scanreco-fjernbetjeningssystem RC-400, som er beskrevet i denne brugsvejledning, må ikke forveksles med de tilsvarende Scanreco-fjernbetjeningssystemer RC-400 G4, eftersom hovedkomponenterne i disse to systemtypers produktfamilie (bærbare kontrolenheder og centralenheder) ikke er kompatible med hinanden og varierer med hensyn til udseende og funktioner.

3.3 Den bærbare kontrolenhed (PCU)

Den bærbare kontrolenhed er en stødsikker, vejrresistent og kompakt letvægtsmodel. De bærbare kontrolenheder kan være lineære greb eller joysticks (se Figur 3.2 nedenfor).

Figur 3.2 Det tilgængelige interval for bærbare kontrolenheder.

Nr.	Beskrivelse
1	MAXI-Joystick er tilgængelig for 1-8 (Konfiguration: 2-0-2 / 2-2-2 / 2-3-2 / 3-2-3 / 3-0-3).
2	MAXI-Linear er tilgængelig for 1-8 lineære greb
3	MINI-Joystick er tilgængelig for 1-6 (Konfiguration: 2-0-2 / 2-2-2).
4	MINI-Linear er tilgængelig for 1-6 lineære greb

Styregrebene og joystickene er fuldt proportionale og har en fjederreturneringsfunktion, som nulstiller positionen, dvs. "dødemandshåndtag". Kontrolenhederne har en stopfunktion, som straks standser al bevægelse.

Alle styregreb/joystick er beskyttet af en sikkerhedsramme, som forhindrer utilsigtet aktivering og mekanisk beskadigelse. Kontrolenheden har som standard flertrinsbetjening med mikrohastighed, som muliggør en øjeblikkelig midlertidig hastighedssænkning. Den kan også udstyres med en lang række kontakter til tænding/slukning af funktioner. En LED-indikator og et lydsignal anvendes til f.eks. at angive betjenings- og batteristatus og sikre en enkel fejldiagnosticering (se Figur 3.4).

3.3.1 Anvendelse af batteri

Der er placeret et batteri i den nederste del af kontrolenheden, som anvendes til betjening af radiostyringen. Det er meget let at skifte.

- Batteriets effektive driftstid er ca. 8 timer på en opladning.
- Når batteriet snart skal oplades, bipper kontrolenheden tre (3) gange til varsel, og samtidigt begynder LED-indikatoren at blinke på kontrolenheden.
- Batteriet skal benyttes, indtil LED-indikatoren slukker. Derefter kan det oplades. Hvis batterikapaciteten er for lav, kan kontrolenheden ikke aktiveres.
- Batterikapaciteten og den driftsmæssige ydeevne reduceres ved meget kolde vejrforhold. Batteriet oplades automatisk under anvendelse med kabelstyring.
- For at reducere behovet for batteriopladning og øge sikkerheden slukkes kontrolenheden automatisk, når enheden ikke har været i brug i mere end ca. fem (5) minutter.

3.3.2 Styregreb/joystick

Kontrolenhed består af styregreb til proportional styring, kontakter til tænding/slukning, mikrobetjening og stopfunktion (se særskilte overskrifter

Figur 3.3 Oversigt over PCU-panel.

3.3.3 Panel for stopfunktion

Der er en rød stopfunktionskontakt (**STOP**) med manuel drejeknap til nulstilling, en trykknap og en rød LED-indikator på kontrolenhedens stopfunktionspanel, se Figur 3.4.

Kontrolenheden aktiveres med fjedertrykknappen til nulstilling (⏻)
Al bevægelse af kranen standses, hvis stopfunktionen aktiveres på kontrolenheden.
Den røde LED-indikator angiver betjenings- og batteristatus.

Figur 3.4 Visning af stopfunktionspanel.

3.3.4 Ændring af radiokanaler

Det er muligt at ændre radiokanalen ved at trykke hurtigt to gange på knappen ⏻.
Der findes 10 forskellige radiokanaler, hvor du kan skifte mellem dem ved at trykke på denne knap flere gange.

<u>Vigtig bemærkning:</u>

I slutningen af 2009 introducerede Scanreco automatisk frekvensstyring i RC400-systemerne og gjorde dermed den funktion overflødig, som er nævnt i kapitel 3.3.4 Ændring af radiokanaler.

Den automatiske frekvensstyring sikrer en mere pålidelig radiotransmission, som er meget modstandsdygtig over for interferens, i kraft af den intelligente frekvensændringsteknologi til automatisk håndtering af frekvensændringer.

Operatøren behøver ikke længere styre radiofrekvensen og risikoen for interferens er minimeret.

Denne brugervejledning er trykt før introduktionen af automatisk frekvensstyring. Kontakt venligst din distributør for at få yderligere oplysninger.

3.3.5 Kontaktpaneler

Kontakterne på kontaktpanelet muliggør aktivering af digitale funktioner via vippekontakter og tryknapper (se Figur 3.5 og 3.6). Digitale funktioner kan anvendes til styring af tænding/slukning af elektriske, hydrauliske og pneumatiske funktioner. Eksempler på funktioner:

- Stop og start af køretøjets motor, gearstang, bip/signal, omstillingsventiler, funktionsændring f.eks. for 7. og 8. funktion osv.

Sørg for altid at vide, hvilke digitale funktioner der er tilsluttet kontrol af tænding/styring.

Figur 3.5 Venstre kontrolpanel på MAXI PCU.

Figur 3.6 Venstre kontrolpanel på MINI PCU.

3.3.6 Styring af mikrohastighed

Denne returfjederkontakt kan anvendes til at reducere driftshastigheden i fem (5) trin fra 100 % til 60 %, 50 %, 40 %, 30 % og 20 % ved begrænsning af hydraulikstyringen. Reguleringen af funktionens hastighed foretages stadig over hele grebets bevægelse og med samme fasthed.

- Når du trykker fjederkontakten til venstre i retning af skildpadden, kan reduktionen af hastigheden ændres fra 100 % til 60 %, 50 %, 40 %, 30 % og 20 % styrekraft.
- Når du flytter kontakten til højre i retning af kaninen, genetableres 100 % styrekraft.
- Af sikkerhedsmæssige årsager kan genetablering af 100 % styrekraft kun foretages, hvis alle styregreb er nulstillede.
- Når den grønne LED-indikator blinker, aktiveres mikrohastighedsfunktionen. Antallet af blink angiver driftshastigheden ifølge tabellen nedenfor. **Hvid du aktiverer stopfunktionen på kontrolenheden, begynder kontrolenheden ved den sidst valgte hastighed.**

Grøn LED	Indikation
lyser ikke	0 - 100 % hastighed (normal hastighed)
1 blink hvert 3. sekund	0 - 60 % hastighed
2 blink hvert 3. sekund	0 - 50 % hastighed
3 blink hvert 3. sekund	0 - 40 % hastighed
4 blink hvert 3. sekund	0 - 30 % hastighed
5 blink hvert 3. sekund	0 - 20 % hastighed

3.3.7 Kabel til kabelstyring

Kontrolenheden kan tilsluttes centralenheden via et tyndt og fleksibelt 5-trådet kabel. Kablet har runde stik (M12) i hver ende.

Kablet overfører digitalt kodede kontroloplysninger fra den bærbare kontrolenhed til centralenheden. Kablet fås i standardlængder á 10 meter.

Bennr.	Funktion
1	Data
2	GND (jord)
3	RS232 TX
4	RS232 RX
5	+24 V jævnstrøm

3.3.8 Tekniske data (PCU)

Element	Tekniske data
Batteri	7,2 V jævnstrøm
Bærbar kontrolenheds effektive driftstid	Ca. 8 timer pr. opladning
Vægt/MAXI/Lineær	1,95/2,20 kg (uden/med batteri)*
Vægt/MAXI/Joystick	1,75/2,00 kg (uden/med batteri)*
Vægt/MINI/Lineær	1,45/1,70 kg (uden/med batteri)*
Vægt/MINI/Joystick	1,30/1,55 kg (uden/med batteri)*
Størrelse MAXI (BxHxD)	350x160x190 mm*
Størrelse MINI (BxHxD)	290x160x190 mm*
IP-klasse	IP65
Omgivelsers temperatur (Celsius/Fahrenheit)	-25 til +70° C/ca. -15 til +160° F

* Vægt og størrelse er omtrentlige angivelser, der er afhængige af konfigurationen.

3.4 Centralenhed (CU)

Centralenheden er fremstillet af plastik og leveres med stik til tilslutning til den bærbare kontrolenhed (ved kabelbaseret fjernbetjening), til strømforsyning, de elektrohydrauliske omskifterventiler, vippeventil og tænd/sluk-funktioner.

Eftersom centralenheden kan blive udsat for meget barske forhold, er boksen indkapslet for at beskytte den mod fugt, varme, kulde, støv, rystelser og korrosion.

Centralenheden indeholder ind- og udgange, som er sikrede mod kortslutning, og er beskyttet mod polaritetsvending, overspænding, stor indgående spændingsovergange og EMC/RF. Tilslutningen af centralenheden kan derfor foretages uden risiko for skader. Den leverede centralenhed er beregnet til strømspændinger på +12/+24 V jævnstrøm (+/- 20 %) med negativ jordforbindelse. Der er anvendt en standardbilsikring i centralenheden.

Plus-sikring: + 10 Amp.

Der kan også benyttes en transformer, hvis der anvendes almindelig strømforsyning til centralenheden. Primær spænding: 110, 115, 220-240, 380, 440 V vekselstrøm og sekundær spænding + 12/+24 V jævnstrøm (+/- 10 %).

Centralenheden er udstyret med:

1. Standardantenne
2. Omskifter for driftstilstand (fjern/manuel: Se kapitel 4.2 Betjeningsanvisninger)
3. Kabelstik til kabelkontrol/programmeringsport
4. Statusindikatorer (LED)
5. 7-delt LED-display

3.4.1 Tekniske data (CU)

Element	Tekniske data
Strømspænding	12/24 V jævnstrøm (+/- 20 %/maks. 5 % V spidseffekt-til-spidseffekt)
Intern sikring	Plus: + 10 Amp. (Standardbilsikring/rød)
Maks. overspænding	Ca. 33 V jævnstrøm (sikring springer)
Proportionale funktioner	1 - 8 proportionale dobbeltfunktioner
Vippeventildrev	Maks. 2,0 Amp (sikring mod kortslutning)
Tænd/sluk-drev	Maks. 1,8 Amp (sikring mod kortslutning)
Reguleringssignaler	Spænding eller PWM (andet efter anmodning)
Strømforbrug når ledig	40 mA
Vægt	1,20 kg (ventil- og tilslutningskabler ikke inkluderet)
Størrelse (BxHxD)	227x205x78 mm
IP-klasse	IP65
Omgivelsers temperatur (Celsius/Fahrenheit)	-25 til +70° C/ca. -15 til +160° F

3.5 Ventil- og tilslutningskabler

Der findes flere forskellige tilslutningskabler, afhængigt af de anvendte ventiler og ekstrafunktioner. I Figur 3.8 vises et eksempel på et kabelsæt til Danfoss-ventiler.

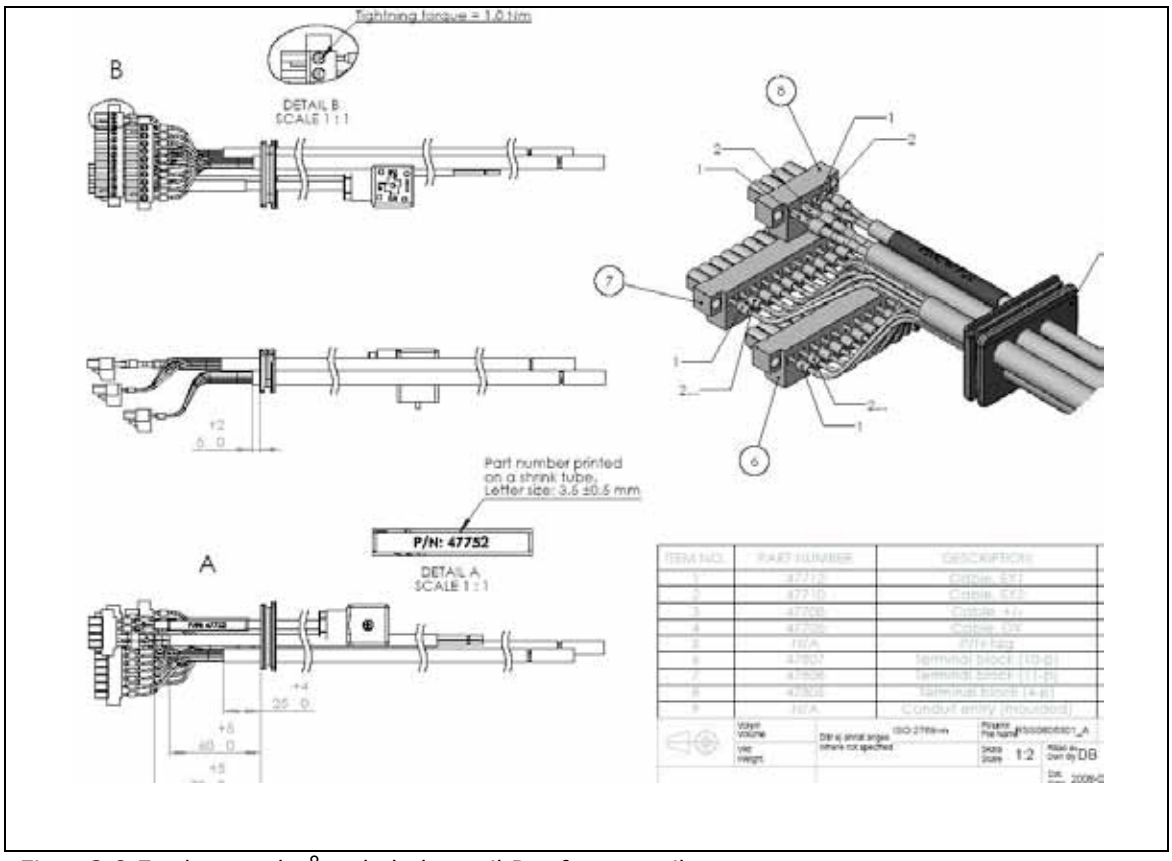

Figur 3.8 Et eksempel på et kabelsæt til Danfoss-ventiler.

3.5.1 Terminaltilslutninger

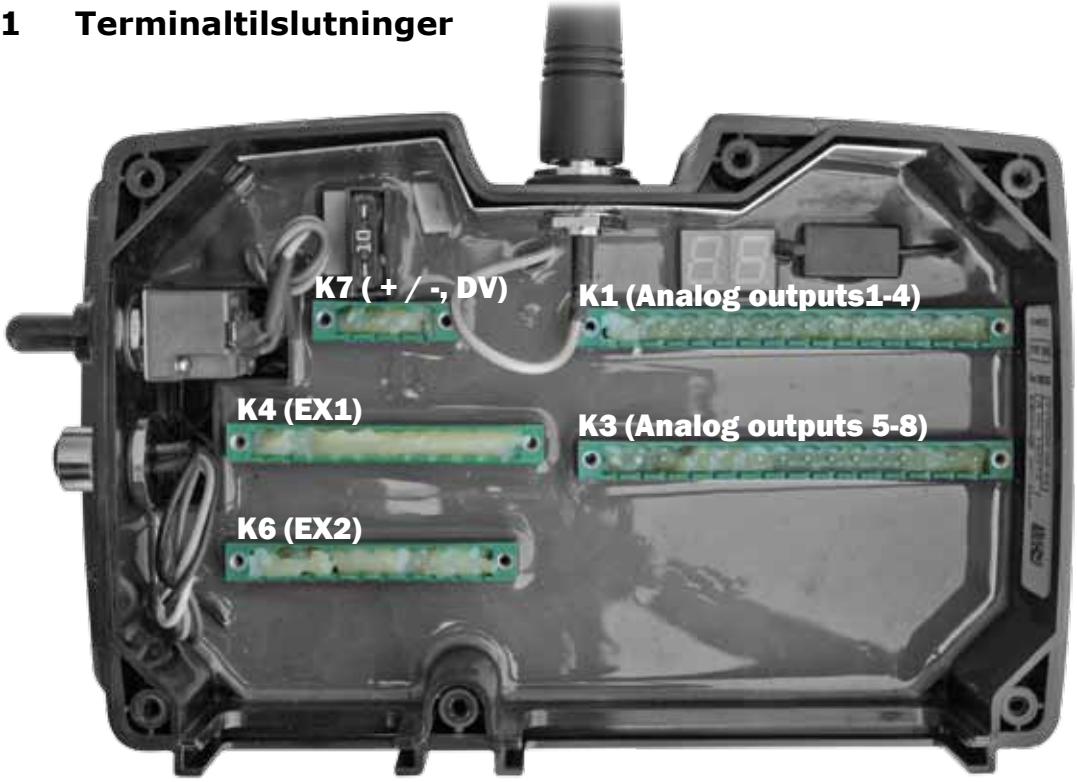

Figur 3.9 Figuren illustrerer de indvendige terminaltilslutninger for standardcentralenheder af type 2000 (Danfoss) og type 3000 (PWM).

Vigtig bemærkning:

Hvis en centralenhed leveres uden formonterede kabler, anbefales det montøren at følge anvisningerne side 27 - 28 i kapitel 5.5 i denne vejledning: Installationsanvisninger - Monteringsvejledning for kabelsæt.

3.5.2 Terminaloversigt for centralenhed af Danfoss-type

K7 Hoved

Ben nr.	Beskrivelse
K7.1	Strøm (+12/24 V JÆVNSTRØM)
K7.2	GND (jord)
K7.3	DV +
K7.4	DV GND (jord)

K1 Analoge udgange

Ben nr.	Nr.	Beskrivelse
K1.1	1	Danfoss-moduls strømforsyning
K1.2		Danfoss-reguleret strømforsyning
K1.3		GND (jord)
K1.4		Fejlskærm
K1.5	2	Danfoss-moduls strømforsyning
K1.6		Danfoss-reguleret strømforsyning
K1.7		GND (jord)
K1.8		Fejlskærm
K1.9	3	Danfoss-moduls strømforsyning
K1.10		Danfoss-reguleret strømforsyning
K1.11		GND (jord)
K1.12		Fejlskærm
K1.13	4	Danfoss-moduls strømforsyning
K1.14		Danfoss-reguleret strømforsyning
K1.15		GND (jord)
K1.16		Fejlskærm

K3 Analoge udgange

Ben nr.	Nr.	Beskrivelse
K3.1	5	Danfoss-moduls strømforsyning
K3.2		Danfoss-reguleret strømforsyning
K3.3		GND (jord)
K3.4		Fejlskærm
K3.5	6	Danfoss-moduls strømforsyning
K3.6		Danfoss-reguleret strømforsyning
K3.7		GND (jord)
K3.8		Fejlskærm
K3.9	7	Danfoss-moduls strømforsyning
K3.10		Danfoss-reguleret strømforsyning
K3.11		GND (jord)
K3.12		Fejlskærm
K3.13	8	Danfoss-moduls strømforsyning
K3.14		Danfoss-reguleret strømforsyning
K3.15		GND (jord)
K3.16		Fejlskærm

K4 EX1 - Digitale udgange/indgange

Ben nr.	Beskrivelse
K4.1	Digital udgang 1
K4.2	Digital udgang 2
K4.3	Digital udgang 3
K4.4	Digital udgang 4
K4.5	Digital udgang 5
K4.6	Digital udgang 6
K4.7	GND (jord)
K4.8	Digital indgang 1
K4.9	Digital indgang 2
K4.10	Digital indgang 3
K4.11	Indgangs strømforsyning (+V JÆVNSTRØM)

K6 EX2 - Digitale udgange/indgange

Ben nr.	Beskrivelse
K6.1	On / Signal
K6.2	Digital udgang 7
K6.3	Digital udgang 8
K6.4	Digital udgang 9
K6.5	GND (jord)
K6.6	Digital udgang 10
K6.7	Digital udgang 11
K6.8	Digital udgang 12/Digital indgang 4
K6.9	Digital udgang 13
K6.10	GND (jord)

K8 EX3 - Ekstra funktioner

Ben nr.	Beskrivelse
K8.1	Kundespecifik
K8.2	Kundespecifik
K8.3	Kundespecifik
K8.4	Kundespecifik
K8.5	Kundespecifik

3.5.3 Terminaloversigt for centralenhed af PWM-type

K7 Hoved

Ben nr.	Beskrivelse
K7.1	Strømforsyning (+12/24 V jævnstrøm)
K7.2	GND (jord)
K7.3	DV +
K7.4	DV GND (jord)

K1 Analoge udgange

Ben nr.	Nr.	Beskrivelse
K1.1	1A	PWM +
K1.2		GND (jord)
K1.3	1B	PWM +
K1.4		GND (jord)
K1.5	2A	PWM +
K1.6		GND (jord)
K1.7	2B	PWM +
K1.8		GND (jord)
K1.9	3A	PWM +
K1.10		GND (jord)
K1.11	3B	PWM +
K1.12		GND (jord)
K1.13	4A	PWM +
K1.14		GND (jord)
K1.15	4B	PWM +
K1.16		GND (jord)

K3 Analoge udgange

Ben nr.	Nr.	Beskrivelse
K3.1	5A	PWM +
K3.2		GND (jord)
K3.3	5B	PWM +
K3.4		GND (jord)
K3.5	6A	PWM +
K3.6		GND (jord)
K3.7	6B	PWM +
K3.8		GND (jord)
K3.9	7A	PWM +
K3.10		GND (jord)
K3.11	7B	PWM +
K3.12		GND (jord)
K3.13	8A	PWM +
K3.14		GND (jord)
K3.15	8B	PWM +
K3.16		GND (jord)

K4 EX1 - Digitale udgange/indgange

Ben nr.	Beskrivelse
K4.1	Digital udgang 1
K4.2	Digital udgang 2
K4.3	Digital udgang 3
K4.4	Digital udgang 4
K4.5	Digital udgang 5
K4.6	Digital udgang 6
K4.7	GND (jord)
K4.8	Digital indgang 1
K4.9	Digital indgang 2
K4.10	Digital indgang 3
K4.11	Indgangs strømforsyning (+V

K6 EX2 - Digitale udgange/indgange

Ben nr.	Beskrivelse
K6.1	Tænd/signal
K6.2	Digital udgang 7
K6.3	Digital udgang 8
K6.4	Digital udgang 9
K6.5	GND (jord)
K6.6	Digital udgang 10
K6.7	Digital udgang 11
K6.8	Digital udgang 12/digital indg. 4
K6.9	Digital udgang 13
K6.10	GND (jord)

K8 EX3 - Ekstra funktioner

Ben nr.	Beskrivelse
K8.1	Kundespecifik
K8.2	Kundespecifik
K8.3	Kundespecifik
K8.4	Kundespecifik
K8.5	Kundespecifik

3.6 Funktionsboks for kranstop (ekstraudstyr)

Funktionsboksen for kranstop er en særskilt enhed til fast montering på køretøjer (se Figur 3.10). Funktionsboksen for kranstop skal tilsluttes mellem køretøjets batteri og centralenheden.

- Når stopfunktionen aktiveres, afbrydes hovedstrømforsyningen til hele fjernbetjeningssystemet.
- Kranstopfunktionen skal placeres et egnet og lettilgængeligt sted.
- Før du begynder at bruge enheden, skal føreren oplyse alle kolleger om stopfunktionen og dens placering.
- Funktionsboksen for kranstop er ikke omfattet af Scanrecos levering – det er montørens ansvar.

Når centralenhedskontakten er i positionen MANUAL (MANUEL) og en elektrisk vippeventil, er stopfunktionen også tilgængelig under brug af det manuelle håndgreb. (Se også kapitel 4 "Sikkerhedsbestemmelser og betjeningsanvisninger").

Figur 3.10 Stopfunktionsboks.

3.7 Batteri

Batteriet er stødsikkert og vejrresistent og er placeret i batteriholderen i den bærbare kontrolenhed. Batteriet er genopladeligt, af typen MiMH (Nickel Metal Hydride) på 7,2 V jævnstrøm (se Figur 3.11). Batteriet er sikret mod kortslutning.

Figur 3.11 Batteriet.

- Batteriets effektive driftskapacitet er ca. 8 timer pr. opladning.
- Når batteriet snart skal genoplades, bipper kontrolenheden tre (3) gange til varsel, og samtidigt begynder LED-indikatoren at blinke på kontrolenheden.
- Batteriet skal benyttes, indtil LED-indikatoren slukker. Derefter kan det oplades. Hvis batterikapaciteten er for lav, kan kontrolenheden ikke aktiveres.
- Batterikapaciteten og den driftsmæssige ydeevne reduceres ved meget kolde vejrforhold. Batteriet oplades automatisk under anvendelse med kabelstyring.
- For at reducere behovet for batteriopladning og øge sikkerheden slukkes kontrolenheden automatisk, når enheden ikke har været i brug i mere end ca. fem (5) minutter.

<u>Vigtig bemærkning:</u>

- Brug kun batterier/batteriopladere, som leveres af Scanreco, Sverige til det specifikke produkt.
- Undgå at oplade batterier i farlige miljøer.
- Forsøg ikke at anvende et batteri, som er beskadiget, utæt, opsvulmet eller korroderet.
- Undgå at anvende batteri/batterioplader ved temperaturer uden for det angivne interval.

3.7.1 Tekniske data (Batteri)

Element	Tekniske data
Type	NiMH-batteri med 6 celler
Nominel spænding	7,2 V jævnstrøm
Vægt	0,20 kg
Størrelse (BxHxD)	150x50x28 mm
IP-klasse	IP65
Omgivelsers temperatur (Celsius/Fahrenheit)	-0 til +45° C/ca. -32 til +115°F

3.8 Batterioplader og batteriopladning

3.8.1 Generel beskrivelse

Batteriopladeren anvender to forskellige opladningstilstande. I begyndelsen bliver enheden opladet med et højt strømniveau, indtil batteriet er opladet, og derefter skiftes der til en lavere opladningstilstand, indtil batteriet fjernes. Den normale opladningstid for et tomt batteri er ca. 3 timer. Batteriopladeren er beregnet til ikke at beskadige batteriet, selvom der oplades over lang tid (se Figur 3.12).

Figur 3.12 Batteriopladeren.

3.8.2 Installation

- Batteriopladeren skal monteres på et sted uden rystelser inde i kabinen eller indendøre og være beskyttet mod fugt, direkte sollys og temperaturvariationer.
- Temperaturen på anvendelsesstedet er 0° til +70° C, men intervallet kan være mindre, afhængigt af batteriets specifikationer.
- Spændingen for strømforsyningen til batteriopladeren skal være +10 til +35 V jævnstrøm, beskyttet af en ekstern sikring på 3.0 Amp.
- Batteriopladeren er konstrueret, så der ikke opstår skader ved opladning over lang tid.
- Polaritet for tilslutningskabel: Inkl. mærket kabel = +
- Maksimalt strømforbrug for batterioplader med batteri: ≈ 400 mA
- Strømforbrug for batterioplader uden batteri: ≈ 10 - 20 mA
- Efter tilslutning af kabelstikket, skal du placere kablet i kabelrillen som vist i Figur 3.13 nedenfor.

Figur 3.13 Når du har tilsluttet kabelstikket, skal du placere kablet i kabelrillen.

3.8.3 Betjening

Batteriopladeren starter en opladningscyklus, når der isættes et batteri (grøn LED-indikator begynder at blinke). Efter ca. tre timer er batteriet opladet og brugsklart (grøn LED-indikator lyser konstant). Hvis strømforsyningen bliver afbrudt, husker batteriopladeren opladningsstatussen og fortsætter med en hurtig eller langsom opladningstilstand, når strømmen tilsluttes igen. Som sikkerhedsmæssig foranstaltning afbrydes opladningen efter tre timer, uanset om batteriet er fuldt opladet eller ej. Den grønne LED-indikator lyser konstant.

Der findes to LED-indikatorer på batteriopladeren:

- Rød LED-indikator (strøm) - Angiver strømforsyning.
- Grøn LED-indikator (opladningsstatus) blinker - Batteri oplades (opladeren er i hurtig opladningstilstand).
- Grøn LED-indikator (opladningsstatus) lyser konstant - Batteri oplades (opladeren er i langsom opladningstilstand).

3.8.4 Batteriopladning via kabelkontrol

Hvis operatøren anvender kabelkontrolfunktionen, og batteriet er placeret i den bærbare kontrolenhed, oplades batteriet automatisk. Kabelkontrolfunktionen kan også anvendes som batterioplader, når systemet ikke er i brug. Placer batteriet i den bærbare kontrolenhed (mens stopfunktion er aktiveret), og tilslut kablet mellem den bærbare kontrolenhed og den elektroniske boks (nødstop på kranen er frigjort). Opladningstiden er ca. 12 - 14 timer.

Centralenheden skal dog være i fjernbetjeningstilstand.

3.8.5 Tekniske data (Batterioplader)

Element	Tekniske data
Strømspænding	10 - 30 V jævnstrøm
Sikring	Ikke inkluderet: Anvend kun med ekstern sikring på 3 Amp.
Batteriopladers strømforbrug uden batteri	≈ 10 - 20 mA
Batteriopladers strømforbrug med batteri	≈ 130 - 140 mA
Vægt	0,25 kg
Størrelse (BxHxD)	252x85x36 mm
IP-klasse	IP21
Omgivelsers temperatur (Celsius/Fahrenheit)	-0 til +70° C/ca. -32 til +160° F

4 Sikkerhedsbestemmelser og betjeningsanvisninger

4.1 Sikkerhedsbestemmelser

Disse anvisninger omfatter de særlige bestemmelser, der gælder for fjernbetjente kraner (kabel eller radio). Føreren skal være opmærksom på indholdet af disse sikkerhedsmæssige bestemmelser.

Fjernbetjente kraner kan kun betjenes af uddannede medarbejdere. Den bærbare kontrolenhed må aldrig overdrages til en person, som ikke har modtaget oplæring i brugen af fjernbetjente kraner. Hvis disse anvisninger ikke bliver fulgt, kan der ske alvorlige uheld.

OPERATØREN SKAL:

- Kontrollere, at kontrolenheden svarer til den kran/maskine, der skal betjenes.
- Lære symboler og positioner at kende for funktioner og retninger i brugen.
- Hver gang før arbejdets begyndelse, skal han kontrollere stopfunktionen på den bærbare kontrolenhed ved at gøre følgende:
  1. Betjene en krans/maskines funktion og trykke på stopknappen på den bærbare kontrolenhed. Kranen skal standse straks. Ingen yderligere kranbevægelser er mulige.
  2. Straks holde op med at bruge kranen og tilkalde en reparatør, hvis kranens bevægelse ikke standses.
- Gå eller stå på behørig afstand under brugen af kranen for at få et godt overblik over styringen. Der må ikke befinde sig uautoriserede personer inden for kranens arbejdsområde.
- Være opmærksom på, at det er forbudt at føre last hen over sig selv eller kolleger.
- Frigøre alle styregreb (dødemandshåndtag), hvis kranens bevægelseskontrol ikke fungerer, og derefter trykke på stopfunktionen på kontrolenheden og nødstopknappen på kranen.
- Sørge for, at stopfunktionen på kontrolenheden altid er trykket ned, når enheden ikke er i brug. Det gælder også for kortvarige stop, f.eks. hvis føreren vil flytte sig.
- Trykke på stopfunktionen på kontrolenheden og på kranen, når kørslen er fuldført. Kontrolenheden skal holdes uden for uautoriserede personers rækkevidde.
- Altid rapportere fejl på udstyret eller mangler til den person, der er ansvarlig for kranen.
- Kontrollere, at intet af sikkerhedsudstyret er blevet ændret eller fjernet.
- Se i de gældende bestemmelser/anvisninger angående "Løft af personer med kraner", "Beskyttelse mod overlastning/overbelastning", "Synlige signaler under betjening af kraner" og "Placering af kraner tæt på lufthavne og højspændingsledninger".
- Være opmærksom på andre relevante bestemmelser og alle eventuelle lokale bestemmelser, som kan være gældende. De findes i de relevante sikkerhedsbestemmelser for krantransport.

- Være opmærksom på indholdet af "BETJENINGSANVISNINGER" og håndtering af og arbejdsmetode for fjernbetjeningssystemet. Se næste afsnit "Betjeningsanvisninger".

4.2 Betjeningsanvisninger

Før kranen tages i brug, skal føreren sætte sig ind i indholdet af "SIKKERHEDSBESTEMMELSER" for fjernbetjente kraner. Føreren skal være opmærksom på alle styregrebs og kontakters funktioner.

1. Ved fjernbetjening: Indstil centralenhedens kontakt for driftstilstand til REMOTE (FJERN).
2. Ved manuel betjening/nøddrift: Indstil centralenhedens kontakt for driftstilstand til MANUAL (MANUEL). Der tilføres nu kun strøm til vippeventilen, og kranens funktioner kan styres direkte fra ventilens håndgreb.
3. Drej nødstopkontakterne op på kranen og kontrolenheden.
4. Kabelbetjening: Tilslut kontrolkablet mellem kontrolenheden og centralenheden (kranen).
5. Radiobetjening: Isæt et nyt opladet batteri i kontrolenhedens batteriholder.
6. Tryk på ⏻, og den røde LED-indikator lyser konstant.
7. Nu er systemet klart til brug. Føreren skal være kende til alle funktioner på styregreb/joystick og kontakter, før du tager enheden i brug.
8. Hvis du vil deaktivere eller aktivere stopfunktionen, skal du trykke på stopfunktionens kontakter på kontrolenheden og nødstopknappen på kranen. Stopfunktionen på kontrolenheden skal altid være trykket ned, når enheden ikke er i brug. Det gælder også for kortvarige stop, f.eks. hvis føreren vil flytte sig.
9. Hvis du vil sikre kontrolenheden lang levetid og gøre brugen sikker, skal du opbevare kontrolenheden i et aflåst skab. Kontrolenheden skal tørres af regelmæssigt, f.eks. med en fugtig klud.

5 Installationsanvisninger

5.1 Generel oversigt over RC 400

Når Scanreco RC 400 er installeret, skal der altid tilsluttes en elektrisk styret vippeventil mellem styreventilen og beholderen af sikkerhedsmæssige hensyn. Det betyder, at vippeventilen er uden strøm under en nødstopmanøvre, og at pumpens aktivitet overføres direkte til beholderen og det hydrauliske tryk dermed fjernes helt fra systemet.

Figur 5.1

5.2 Vigtig bemærkning under svejsning

Vigtigt: Nogle gange er det nødvendigt at svejse en truck/maskine. Under svejsningen skal systemets elektriske tilslutninger altid frakobles andet udstyr, herunder strømkabler (+ og -), alle ventilkontakter og EX-kabelstik.

5.3 Placering af centralenheden

Vigtigt: Centralenheden skal monteres ifølge anbefalingerne nedenfor (se Figur 5.2). For at sikre længst mulig levetid for centralenheden og dens kabler, skal centralenheden altid monteres, så ventilkontakterne er placeret nedad. Centralenheden må ikke monteres, så kablerne vender opad. Formålet er at forhindre, at der køber vand langs kablerne og ind i centralenheden.

(Kablerne på centralenheden udsættes således ikke for akkumuleret vand, fugt, salt osv. i længere tid ad gangen). Centralenheden skal monteres på et sted uden rystelser og væk fra kraftige varmekilder (f.eks. udstødningsrør o.lign.).

Figur 5.2 Sådan monteres centralenheden.

5.4 Anbefalinger for montering

- Af hensyn til optimal radiokommunikation skal centralenheden og dens antenne placeres så højt og frit som muligt. Radiosignalmodtagelsen for en antenne, der er afskærmet og omgivet af faste genstande, vil være betragteligt forringet. Der kan anskaffes en ekstern antenne, hvis der er behov for det.
- Antennestiften må ikke berøre nogen metalliske genstande.
- Centralenheden skal monteres på et sted uden rystelser og væk fra kraftige varmekilder (f.eks. udstødningsrør o.lign.).
- Strøm- og ventilkabler skal vende nedad ved montering!

5.5 Monteringsvejledning for kabelsæt

For at maksimere produktets levetid og forhindre uønskede driftsafbrydelser, skal du læse denne vejledning i kabelmontering, før du forsøger at montere kabelsættet.

Hvis der ikke allerede er påført smørelse på de områder, der er vist på billedet, skal du sørge for at påføre vandfast smørelse, som egner sig til elektronisk udstyr, i passende mængder på de nævnte områder.

Figur 5.3 Centralenhed med fjernet låg.

Bryd membranen, og før kablet gennem den. Der opnås en god forsegling ved at lade membranen slutte helt til.

Fastgør kablet med en kabelbinder eller lignende.

Figur 5.4 Membran.

Figur 5.5 Kabelbinder.

Påfør smørelse som vist på billedet. Tildæk alle eksponerede metaldele og fyld alle hulninger.

For at opnå det bedste mulige resultat skal du påføre smørelse i hulningerne på kontakten, før du tilslutter de enkelte ledninger til den.

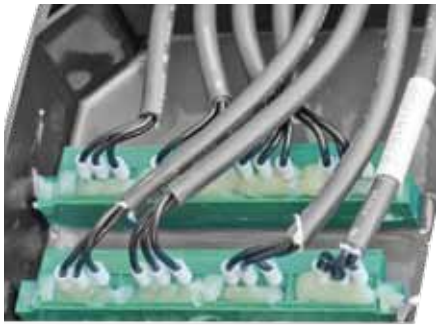

Figur 5.6 Påført smørelse.

Figur 5.7 Kabels retning.

6 Fejlfinding

6.1 Generelle oplysninger

Hvis der opstår fejl:

Operatøren kan kontrollere følgende, før der tilkaldes en reparatør.

Reparatøren skal kontrollere følgende, før distributøren eller Scanreco AB, Sverige, kontaktes.

Kontroller **altid** type- og serienummeret på de relaterede systemers bærbare kontrolenhed og centralenhed, før du kontakter distributøren eller Scanreco AB, Sverige.

6.2 Angivelser på den bærbare kontrolenhed

Status- og alarmangivelser kan aflæses af den bærbare kontrolenheds indikatorer LED MICRO (MIKRO) og LED ON (TÆND) og den indbyggede alarm (se Figur 6.1).

1 = Venstre side af stopknappen: LED MICRO (MIKRO)

2 = Højre side af stopknappen: LED ON (TÆND)

3 = Lyd, via intern alarm

Figur 6.1 Status- og alarmangivelse på bærbar kontrolenhed.

6.2.1 Statusangivelser for drift

Den bærbare kontrolenhed anvender LED ON (TÆND) og LED MICRO (MIKRO) til at angive strømstatus og alarmer.

Et fungerende system skal vise følgende på LED ON (TÆND):

LED ON lyser rødt: Det betyder, at den bærbare kontrolenhed er aktiv og overfører data til centralenheden via kabel eller radio.

LED ON blinker rødt hvert andet sekund: Det betyder, at batteriet snart skal oplades. Denne angivelse går forud for alarmen, som bipper tre (3) gange.

LED MICRO anvendes til at angive mikrotilstand for strømforsyningen.

LED MICRO blinker grønt en, to, tre, fire eller fem gange hvert 3. sekund: Det betyder, at mikrofunktionen er aktiv (se kapitel 3.3.6 for at få yderligere oplysninger).

6.2.2 Fejlkoder

Under opstart af den bærbare enhed udføres en selvtest, og eventuelle fundne fejl angives med en fejlkode på LED ON og alarmen blinker/lyder et bestemt antal gange. Antallet af gange repræsenterer en bestemt fejl:

Indikation	Betydning
1	Greb/joystick i position 1, ikke i neutral position ved opstart eller defekt
2	Greb/joystick i position 2, ikke i neutral position ved opstart eller defekt
3	Greb/joystick i position 3, ikke i neutral position ved opstart eller defekt
4	Greb/joystick i position 4, ikke i neutral position ved opstart eller defekt
5	Greb/joystick i position 5, ikke i neutral position ved opstart eller defekt
6	Greb/joystick i position 6, ikke i neutral position ved opstart eller defekt
7	Greb/joystick i position 7, ikke i neutral position ved opstart eller defekt
8	Greb/joystick i position 8, ikke i neutral position ved opstart eller defekt
13	Fejl i nødstop under selvtest

6.3 Angivelser på centralenheden

Status- og fejlkoder kan aflæses af de to LED-indikatorer på centralenhedens forside (LED DV og LED STATUS) og via lågets vindue til overvågning af det interne, dobbelte og 7-delte LED-display. Placeringerne er vist på figuren nedenfor. (Se Figur 6.2).

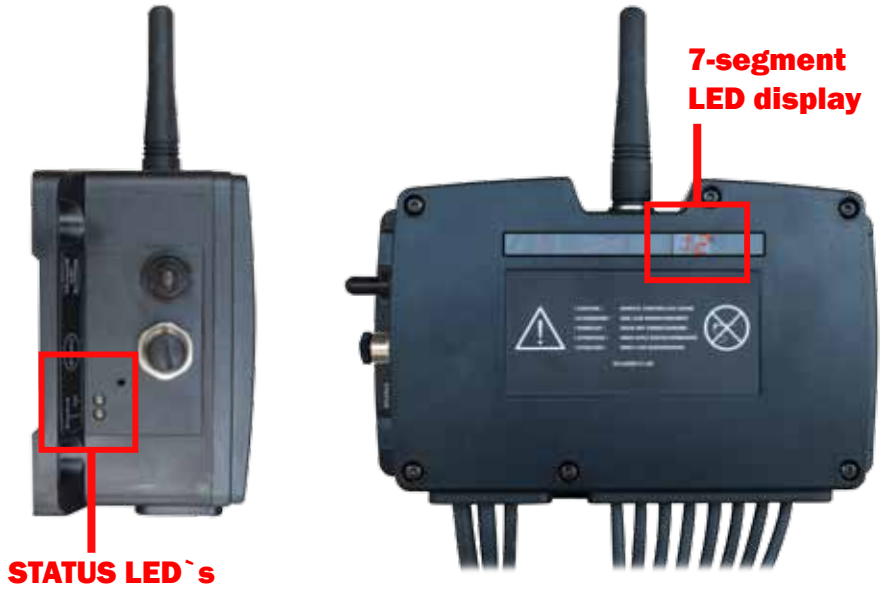

Figur 6.2 Indikatorer på centralenheden.

6.3.1 Statusangivelser for drift

Statusangivelser for driften kan aflæses fra LED STATUS og LED DV.

Et fungerende system skal vise følgende på LED ON (TÆND):

LED STATUS lyser rødt: Centralenhed er i standby-tilstand

LED STATUS lyser grønt: Centralenhedens er i standby-tilstand eller i aktiv driftstilstand

LED STATUS blinker rødt: Række af fejlkoder (Kontroller dobbelt, 7-delt LED-display for yderligere oplysninger).

LED DV anvendes til at angive strømstatus for vippeventilens udgang.

LED DV lyser rødt: Angiver, at DV-udgangen er aktiv

6.3.2 Fejlkoder

Centralenheden angiver registrerede fejl via det dobbelte, 7-delte LED-display.

Hvis centralenheden registrerer en fejl, angives det af LED STATUS, som blinker rødt, mens det dobbelt, 7-delte LED-display angiver fejlkoden sammen med cifrene "Er", efterfulgt af fire cifre ti to blokke med den tilsvarende fejlkode.

Eksempel på række af fejlkoder:

"Er" -> "15" ->"1A" -> ""Er" -> "15" ->"1A" ->"Er" -> "15" ->"1A" ->

Rækken af fejlkoder gentages tre gange, hvis fejlen betragtes som en mindre fejl, og systemet genstarter til standby-tilstand, hvis fejlen betragtes som en alvorlig fejl. Fejlkoderækken vises fortsat, indtil strømmen afbrydes.

Under listen over fejlkoder og deres betydning

Indikation		**Betydning**
Blok 1	**Blok 2**	
01.	01-07	Checksum-fejl (Blok 2 viser typer)
02.	02	Kortslutning i DV-udgang
04.	01-14	Kortslutning i digital udgang (Blok 2 viser hvilken udgang)
07.	1A-8B	Fejl i analog udgang (Blok 2 viser hvilken udgang)
15.	1A-8B	Kortslutning i analog udgang (Blok 2 viser hvilken udgang)
16.	1A-8B	Afbrydelse i analog udgang (Blok 2 viser hvilken udgang)
17.	01	Strømspænding er for lav
17.	02	Strømspænding er for høj

6.4 Systemet fungerer ikke

Kontroller altid følgende:

- Er der strømforsyning på **+**12 V jævnstrøm/+24 V jævnstrøm, +/- 20 %, maks. 5 % V spidseffekt-til-spidseffekt til systemet? Måling foretages ved nødstopkontakt (lodset og lastet).
- Betjenes systemet via kabelkontrolfunktionen?
- Betjenes systemet manuelt, dvs. er systemet i tilstanden MANUAL (MANUEL)?
- Placer kontakten i positionen **"REMOTE"** (FJERN), kontroller og bekræft, hvad centralenhedens LED-indikatorer og det dobbelte, 7-delte LED-display angiver.
- Aktiver den bærbare kontrolenhed, kontroller og bekræft, hvad den bærbare kontrolenheds LED-indikatorer og alarmen angiver.
- Aktiver de enkelte funktioner en ad gangen, kontroller og bekræft hvad centralenheder og/eller den bærbare kontrolenhed angiver.

7 Programmering af parametre og indstillinger

7.1 Generel beskrivelse

Scanreco RC 400 tilbyder betragtelige muligheder for systemkonstruktører af hydraulisk drevne, mobile kraner og maskiner. Programmet i kontrolsystemet er meget omfattende, fleksibelt og har mange tilpasningsmuligheder til specifikke formål. Kontrolsystemet tilbyder enkel programmering af en række funktioner, som let kan aktiveres eller deaktiveres eller ændres under brugen.

Med henblik på at opnå de bedste mulige styringsegenskaber på den mest enkle måde, foretages al programmering/kalibrering af styreegenskaber under brugen (såkaldt online). Al programmering/kalibrering udføres fra den bærbare kontrolenhed. Programmering er enkel og kræver ingen værktøjer/instrumenter.

Kontrolsystemet er fyldt med og forberedt til tovejs (dupleks) kommunikation og signalhåndtering af funktioner som f.eks. rampe, parallel, lås, dødemandsfunktion, fastholdelse, dobbelt og overbelastning/løftreduktion osv.

Niveauerne i autorisationen er opdelt i fire hovedgrupper:

- Autorisationsniveau 1 (installatør)
- Autorisationsniveau 2 (veluddannet installatør, veluddannet servicepersonale)
- Autorisationsniveau 3 (veluddannede kran- og ventilproducent, veluddannet systemkonstruktør)
- Autorisationsniveau 4 (Scanreco AB, Sverige).

7.2 Autorisationsniveau 1

7.2.1 Ændring af bevægelsens retning

Dette afsnit beskriver, hvordan du ændrer bevægelsens retning, hvis kranen bevæger sig i modsat retning af den ønskede.

Eksempel:

Efter installationen og testkørslen er det konstateret, at 3. og 5. grebs bevægelser kører i modsat retning af den ønskede. Se eksemplet nedenfor for at ændre bevægelserne for 3. og 5. greb.

SÅDAN GØR DU

1. Fjern batteriet. Tilslut kablet mellem den bærbare kontrolenhed og centralenheden og testkør kranen. Tryk derefter på stop-knappen på den bærbare kontrolenhed og nødstopknappen på kranen.
2. Drej stopknappen opad på den bærbare kontrolenhed og på kranen.
3. Tryk på ON-knappen (TÆND) på den bærbare kontrolenhed. Den røde LED-indikator skal lyse konstant.
4. Pres returfjederkontakten MICRO (MIKRO) til HØJRE i retningen OFF (SLUK) flere gange efter hinanden, indtil den bærbare kontrolenhed giver et langt bipsignal. Vent ca. 12 sekunder indtil det næste lange bipsignal, og fortsæt derefter med nr. 5 nedenfor.

   Bemærk 1: Den røde LED-indikator slukkes, hver gang den bærbare kontrolenhed giver et bipsignal.

   Bemærk 2: Hvis det første lange bipsignal ikke høres, skal du begynde forfra fra nr. 1 ovenfor og udføre nr. 3 og nr. 4 hurtigere. Nr. 3 og nr. 4 skal udføres inden for maks. 5 sekunder.
5. Tryk på en gang på ON-knappen (TÆND).

   Den bærbare kontrolenheds indbyggede alarm giver et kort bip en gang hvert 5. sekund for at bekræfte, at punkterne ovenfor er udført korrekt. Hvis der høres andre bipsignaler, skal du starte fra punkt 1 igen. Nu kan du let ændre retningen. Se nr. 6 nedenfor.
6. Nu kan du betjene kranen. Flyt det 3. kontrolgreb (som fungerer i modsat retning end den ønskede), og pres kontakten MICRO (MIKRO) mod VENSTRE i retningen ON (TÆND).

   Kranen ændrer nu retning og fortsætter med samme valgte hastighed i den modsatte retning. Udfør samme procedure for det 5. styregreb.

   Flyt det 5. kontrolgreb (som fungerer i modsat retning end den ønskede), og pres omskifterkontakten MICRO (MIKRO) mod VENSTRE i retningen ON (TÆND). Kranen ændrer straks retning og fortsætter med samme valgte hastighed i den modsatte retning. Hvis der er foretaget en retningsændring tidligere for et bestemt greb, skal du gøre som vist ovenfor, men presse omskifterkontakten MICRO (MIKRO) til HØJRE i retningen OFF (SLUK).

   Betjen og kontroller, at alle kranbevægelser kører i de ønskede retninger.
7. Tryk på stopknappen på den bærbare kontrolenheden.

   Programmeringen er nu fuldført, og kranen kører i de retninger, som du angav under punkt 6. Ved radiobetjening skal du fjerne kabelkontrolenheden og teste kørslen af kranen.

Hvis du ikke er tilfreds med en eller flere bevægelsesretninger, skal du gentage proceduren ovenfor.

Bilag 1

www.scanreco.se

Bilag 1

Document number S071	
Revision C	Date 2011-10-17
Document type Manual	

SERVICE MANUAL

Remote Control System RC400 G2B/G3B

Contents

1 General....3
1.1 Synopsis 3
1.2 Distribution 3
1.3 Terminology 4
1.4 Applicable products 4
1.5 Product identification 5
2 Preface....6
2.1 General information 6
3 General system description....7
3.1 General description 7
3.2 Schematic overview of Scanreco RC-400 G2B 8
3.3 Schematic overview of Scanreco RC400 G3B 9
4 Getting started....10
4.1 Portable Control Unit definition 10
4.2 Central Unit G2B definition 11
4.3 Central Unit G3B definition 12
4.4 Cable or radio communication 13
4.5 Cable connection schematics 13
5 Inputs & Outputs....14
5.1 Analogue functions 14
5.2 Portable Control Unit MAXI digital inputs 16
5.3 Portable Control Unit MINI digital inputs 17
5.4 Digital functions 18
5.5 Terminal schematics for current controlled Central Unit G2B 19
5.6 Terminal schematics for voltage controlled Central Unit G2B 20
5.7 Terminal schematics for Central Unit G2B CAN interface 21
5.8 Connection schematics for Central Unit G3B 22
6 Operational indications....23
6.1 Central Unit status and operational indications 23
6.2 Central Unit LED-display 24
6.3 Portable Control Unit status indications 25
7 Error code indications....26
7.1 General description 26
7.2 Central Unit error codes 26
7.3 Portable Control Unit error codes 29
8 Radio....30
8.1 General description 30
8.2 Determining radio quality 30
8.3 Radio channel / Frequency 30
8.4 Range 30
9 Diagnostics mode....31
9.1 General description 31
9.2 Activating diagnostics mode 31
9.3 Table / Diagnostics data 32
10 Online Programming mode....35
10.1 General description 35
10.2 Activating online programming mode 36
10.3 Table / Programming options 37
11 Portable Control Unit self test mode....40
11.1 General description 40
11.2 Activating PCU Test Mode 40
12 ID-code programming....41
12.1 General description 41
12.2 Procedure 41
13 G2B Standard cable kits....42
13.1 General description 42
13.2 Standard supply cable kits 43
13.3 Standard valve cable kits for Sauer-Danfoss PVG-32 44
13.4 Standard valve cable kits for HAWE 45
13.5 Standard valve cable kits for PWM solenoids 46

Document information

Attribute	Information
Document type	Manual
Title	Remote Control System RC400 G2B / G3B
Subtitle	Service Manual
Document number	S071
Filename	S071
Revision	C
Revision date	2011-10-17

Revision history

Revision	Date	Name	Note
A	2010-10-29	Scanreco AB	First release
B	2011-08-14	Scanreco AB	G3B Central Unit added Major changes in document
C	2011-10-17	Scanreco AB	G2B Standard Cable kit chapter added Minor changes in document

1 General

1.1 Synopsis

Scanreco Remote Control System RC400 G2B/G3B Service Manual

This service manual is intended as a complement to the Remote Control System RC400 G2B Instruction manual and covers more in-depth information surrounding service and fault findings on the systems.

1.2 Distribution

Name	Rule
Internal	Only within own organization

1.3 Terminology

Abbreviation	Description
n/a	Not applicable
PWM	Pulse Width Modulation
PCU	Portable Control Unit
CU	Central Unit
LED	Light Emitting Diode
ST	Status LED
DV	Dump Valve

1.4 Applicable products

This document is applicable on the below declared products and program versions.

Item no:	Description	Program version
3010	G2B Central Unit PWM EU	4.10
3011	G2B Central Unit PWM NAFTA	4.10
2010	G2B Central Unit Danfoss EU	2.14
2011	G2B Central Unit Danfoss NAFTA	2.14
1602	G3B Central Unit Type 1 EU	1.00
1603	G3B Central Unit Type 1 NAFTA	1.00
1604	G3B Central Unit Type 2 EU	1.00
1605	G3B Central Unit Type 2 NAFTA	1.00
n/a*	G2B Portable Control Unit Maxi Linear	1.07
n/a*	G2B Portable Control Unit Maxi Joystick	1.07
n/a*	G2B Portable Control Unit Mini Linear	1.07
n/a*	G2B Portable Control Unit Mini Joystick	1.07

*Due to the variety of configurations available for the Portable Control Units, item numbers are not declared; only the available Portable Control Unit platform types are declared, for more detailed information refer to customer part list where available.

1.5 Product identification

All SCANRECO Products are labeled with product part number and serial number for verification. Below illustrations shows where these numbers can be located.

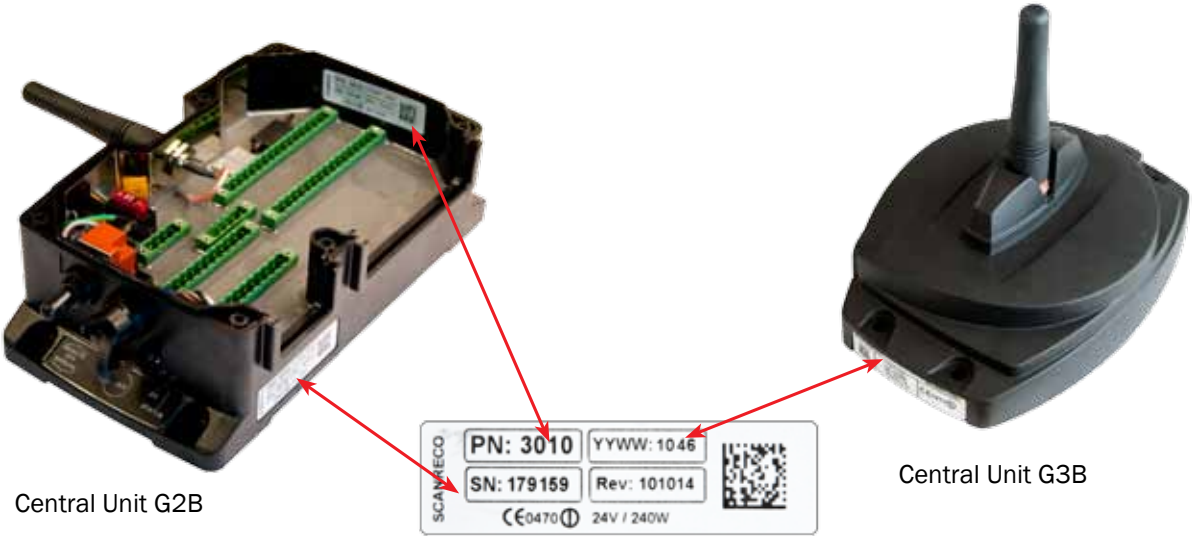

Central Unit G2B

Central Unit G3B

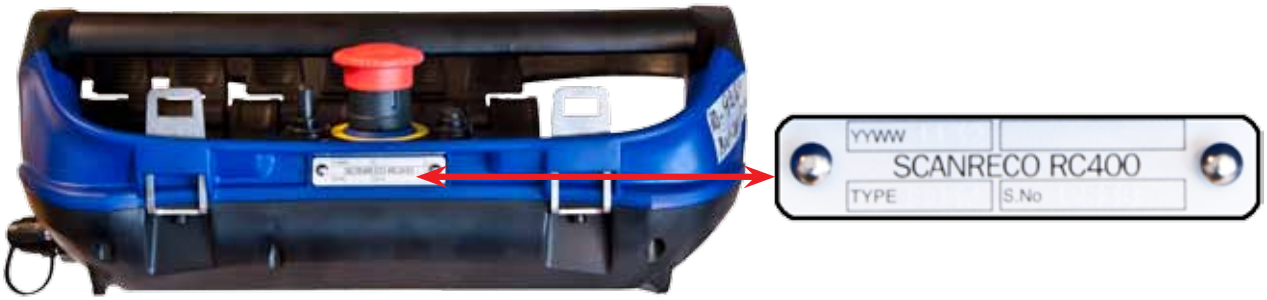

Portable Control Unit MAXI

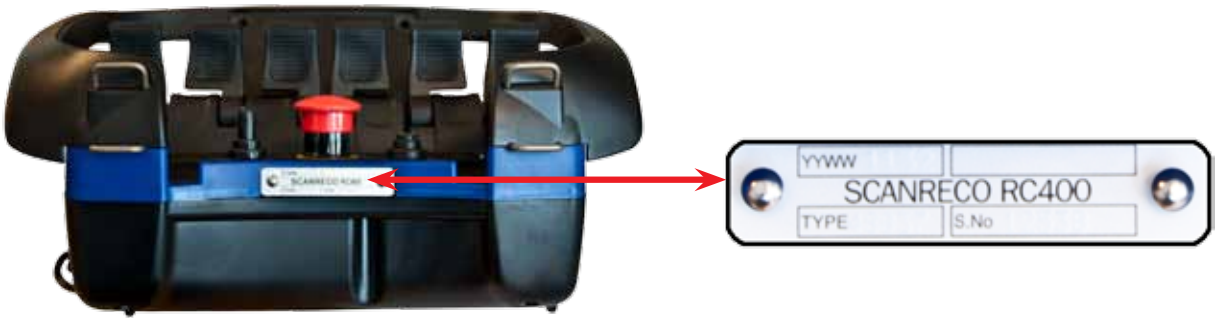

Portable Control Unit MINI

Always check and verify product item- and serial no. before any type of service is commisioned, refer to customer parts list and system-/product technical specifications in order to determine system-/product configuration.

2 Preface

2.1 General information

This manual is intended as a complement to the crane / machine instruction book and covers the Scanreco RC 400 G2B/G3B Remote Control System.

The Scanreco RC 400 G2B/G3B offers the driver an extremely advanced remote control system with speed, precision, control and maximum safety.

In order to ensure your safety and the safety of your crane / machine you should study and learn these instructions. This will enable you to quickly familiarise yourself with your new remote control system and how to utilise it.

- Remotely controlled cranes may only be operated by qualified personnel. The driver must be aware of the contents of chapter 4 “Safety regulations and Operating instructions” available in the Intruction Manual before operation is started. Serious accidents may occur if these instructions are not followed.

- To protect the portable control unit from damage and for safety reasons, the control unit must be kept in a locked cabin

- Follow the instructions given in the crane handbook regarding moving the crane from its parking position, the best arm positioning while loads are being handled and parking of the crane.

- Due to the unlimited variety of cranes, machines, objects, vehicles and equipment on which the remote control system are used, and the numerous standards which are frequently the subject of varying interpretation, it is impossible for the personnel at Scanreco to provide expert advice regarding the suitability of a given remote control for a specific application. It is the responsibility of the purchaser to determine the suitability of any Scanreco remote control product for an intended application and to insure that it is installed and guarded in accordance with all country, federal, state, local, and private safety and health regulation, codes, standards and Scanreco recommendation (this manual). If the Scanreco RC 400 G2B/G3B will be used in a safety critical application, the customer / driver must undertake appropriate testing and evaluation to prevent injury to the ultimate user. Scanreco does not take responsibility for any damage or injury.

- Unauthorized tampering with a Scanreco remote control system automatically invalidates guarantee.

3 General system description

3.1 General description of Scanreco RC-400 G2B/G3B

The Scanreco RC 400 G2B/G3B remote control system has been especially developed for hydraulically driven mobile cranes and machinery. The system is a digital remote control system based on an extremely advanced microprocessor technology. Years of exhaustive and demanding testing have shown that the remote control system can cope with the roughest of environments.

The system is protected against electromagnetic and radio frequency radiation and can be installed onto most hydraulic valve types (voltage, current pulse width, or protocol steered) found on the market.

In its basic form the remote control system is comprised of a portable control unit with manoeuvre levers for proportional control and switches for ON/OFF functions, a central unit with connection cable for driving proportional electro-hydraulic slide controllers.

Digitally coded control information (lever deflection and switch position) is sent from the control unit via electric cable or via radio to the central unit. The control unit and central unit translate the magnitude and direction of the manoeuvre lever deflections and switch positions to corresponding valve function, speed and direction and thus crane movement.

3.2 Schematic overview of Scanreco RC-400 G2B

Below illustrations shows a typical system consistory for the G2B system

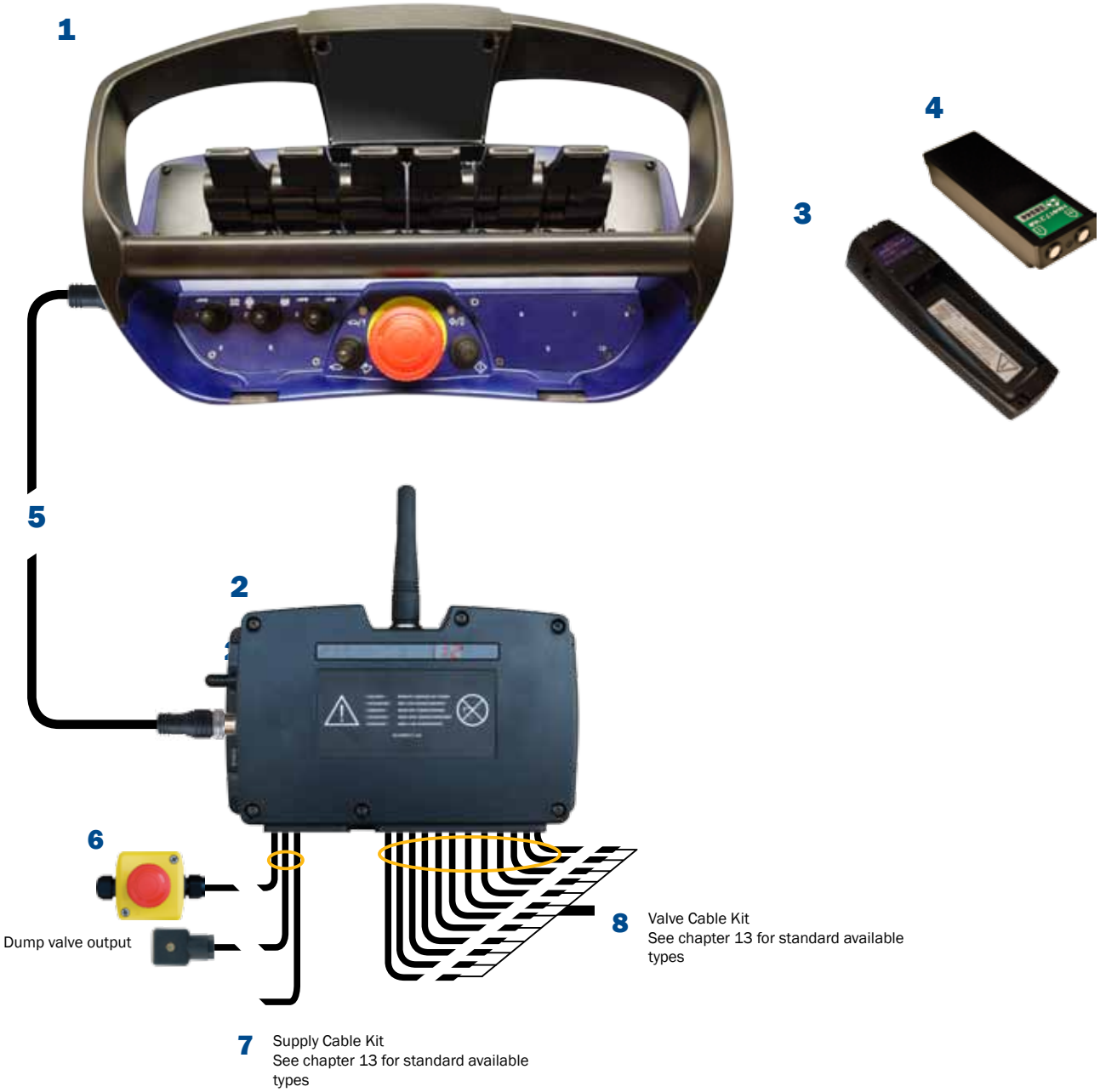

No	Description	Qty
1	Portable Control unit (PCU)	1
2	Central unit G2B (CU)	1
3	Battery Charger (10 - 30 VDC)	1
4	Battery cassette (NiMH 7.2 VDC)	2
5	Manoeuvre cable (10 meters)	1
6	Emergency stop box (Optional)	1
7	Cable kit supply cables + digital outputs	1
8	Cable kit valves cables (analogue outputs)	1

3.3 Schematic overview of Scanreco RC-400 G3B

Below illustrations shows a typical system consistory for the G3B system

No	Description	Qty
1	Portable Control unit (PCU)	1
2	Central unit G3B (CU)	1
3	Battery Charger (10 - 30 VDC)	1
4	Battery cassette (NiMH 7.2 VDC)	2
5	Manoeuvre cable (10 meters)	1

4 Getting started

4.1 Portable Control Unit definition

The illustrations below aims to delare all entities mentioned in this document.

Activating the Portable Control Unit

Insert battery or connect cable connector!

1. Twist up the Stop-button
2. Press the On-button once
   - LED-Power will be illuminated RED

4.2 Central Unit G2B definition

The illustrations below aims to declare all entities mentioned in this document.

Activating the Central Unit

The Central Unit can be activated in two modes via the R/M switch; REMOTE or MANUAL mode. In REMOTE mode the Central Unit is controlled by the PCU, in MANUAL mode the system supplies only the DV-output intended for Dump valve supply; the complete system is by-passed allowing manual operation of distributor bench (where available).

REMOTE MODE:

Operation via PCU
LED STATUS will be illuminated red at first then green when in contact with PCU.

MANUAL MODE:

System by-pass / Manual operation

LED DV will be illuminated red.

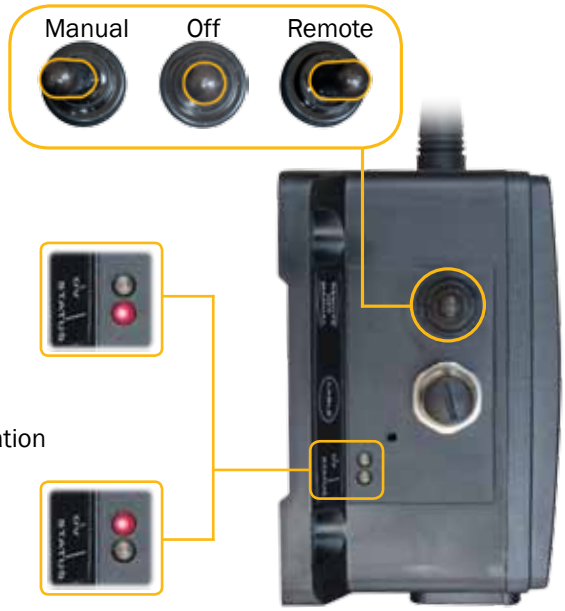

4.3 Central Unit G3B definition

The illustrations below aims to declare all entities mentioned in this document.

Activating the Central Unit G3B

The Central Unit G3B is supplied thru Cable A and requires external power switching, see chapter 5.8 for further info.

The Central Unit G3B exists in 2 different versions; one with 2 cable outputs and one with 3 cable outputs. Refer to chapter 5.8 for further info.

4.4 Cable or radio communication

Cable communication has higher priority than radio communication, if a cable link is present between the PCU and Central Unit this will be detected by the system, disabling radio communication.

4.5 Cable connection schematics

Cable connection	
Pin no.	Wire color
1	Brown
2	White
3	Blue
4	Black
5	Grey

Portable Control Unit Pin assignments

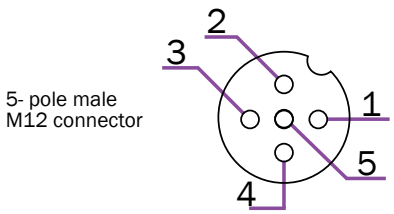

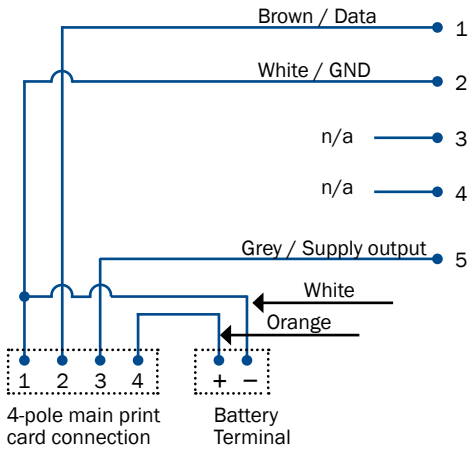

Central Unit G2B/G3B Pin Assignments

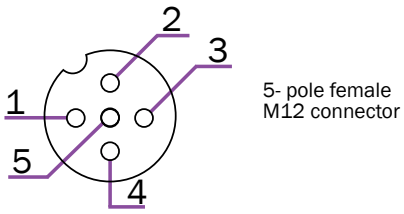

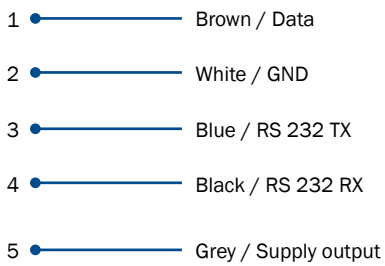

5 Inputs & Outputs

5.1 Analogue functions

The analogue inputs available for each platform (MAXI Linear, MAXI Joystick, MINI Linear and MINI Joy stick) are by default assigned an analogue output on the Central Unit, below figures declares the standard assignments.

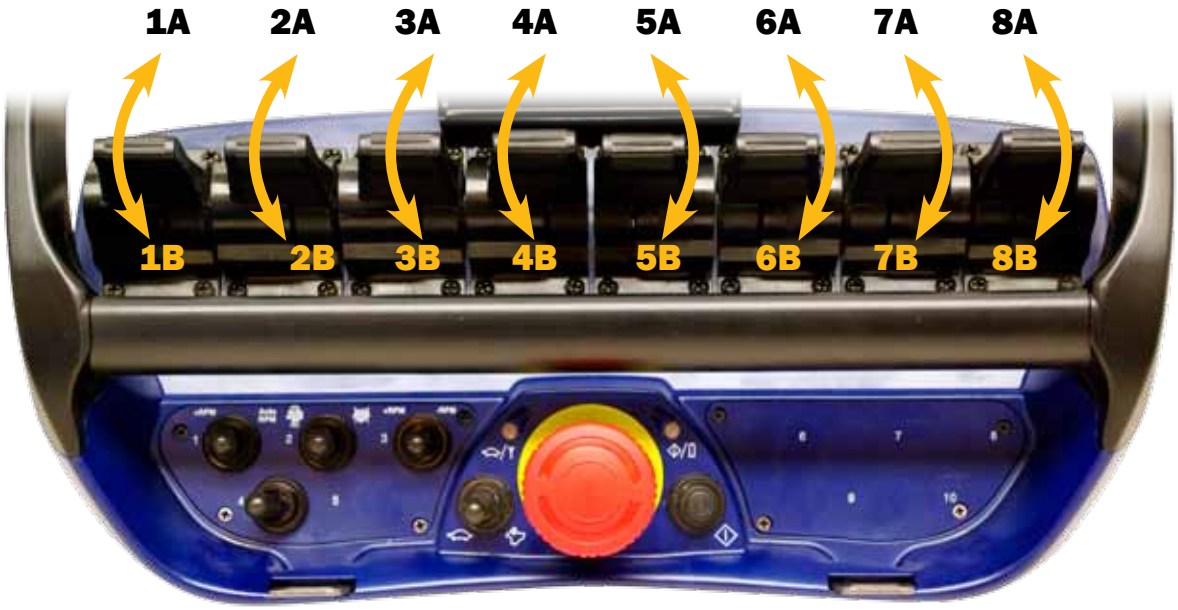

PCU MAXI Linear standard assignments

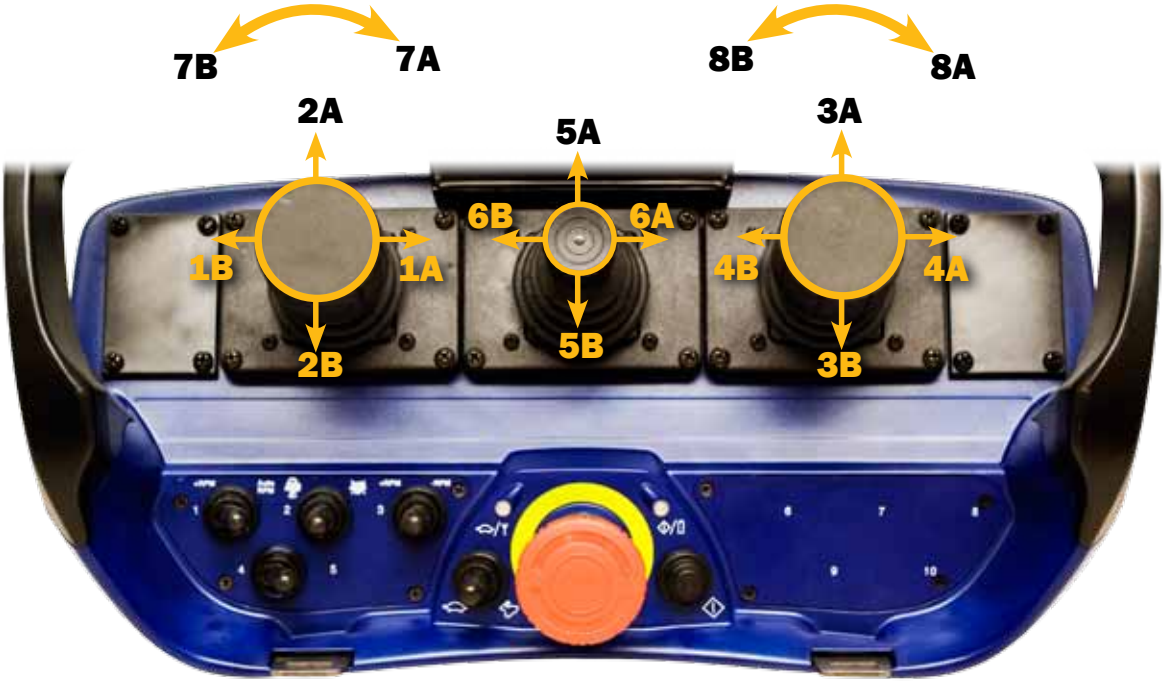

PCU MAXI Joystick standard assignments

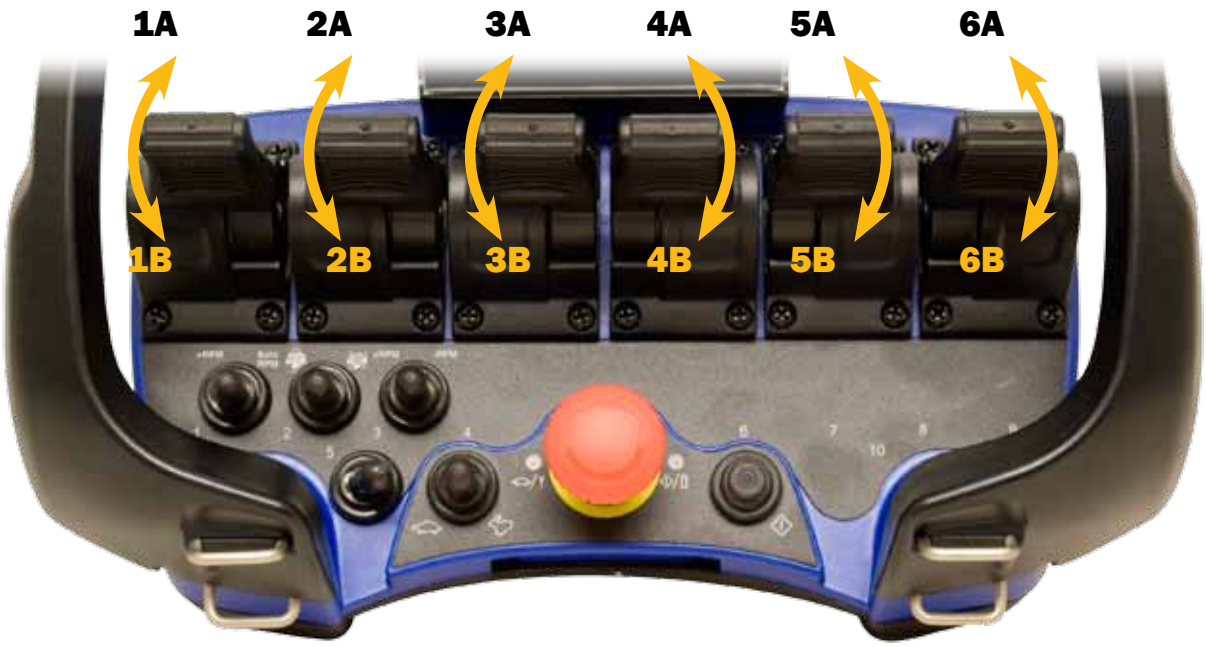

PCU MINI Linear standard assignments

PCU MINI Joystick standard assignments

5.2 Portable Control Unit MAXI digital inputs

The digital inputs available are NOT all by default assigned an digital output on the Central Unit, below figures only declares digital input access.

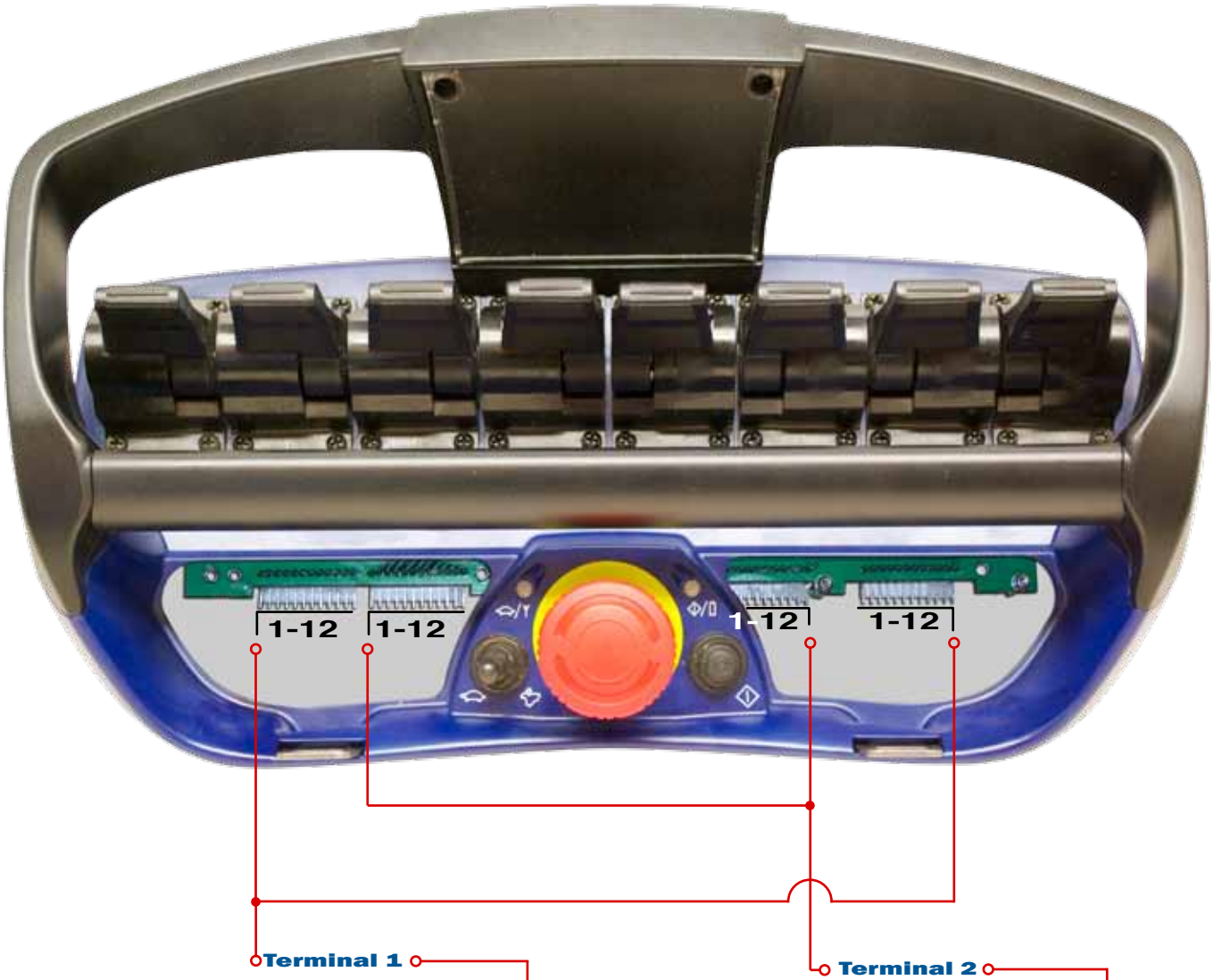

No.	Type	Colour code	AMP Pin no.
-	Common (GND)	Black	1
10	Digital input 33	Pink	2
9	Digital input 06	Grey	3
8	Digital input 02	Brown	4
7	Digital input 32	Purple	5
6	Digital input 05	Orange	6
5	Digital input 31	Black	7
4	Digital input 07	White	8
3	Digital input 04	Blue	9
2	Digital input 03	Green	10
1	Digital input 01	Yellow	11
-	Supply output	Red	12

No.	Type	Colour code	Amp Pin no.
-	Common (GND)	Black	1
20	Digital input 36	Pink	2
19	Digital input 35	Grey	3
18	Digital input 34	Brown	4
17	Digital input 37	Purple	5
16	Digital input 08	Orange	6
15	Digital input 09	Black	7
14	Digital input 13	White	8
13	Digital input 12	Blue	9
12	Digital input 11	Green	10
11	Digital input 10	Yellow	11
-	Supply output	Red	12

Note that on the MAXI platform the Terminals 1 and 2 are mirrored and available on both left and right hand side of the stop button

5.3 Portable Control Unit MINI digital inputs

The digital inputs available are NOT all by default assigned an digital output on the Central Unit, below figures only declares digital input access.

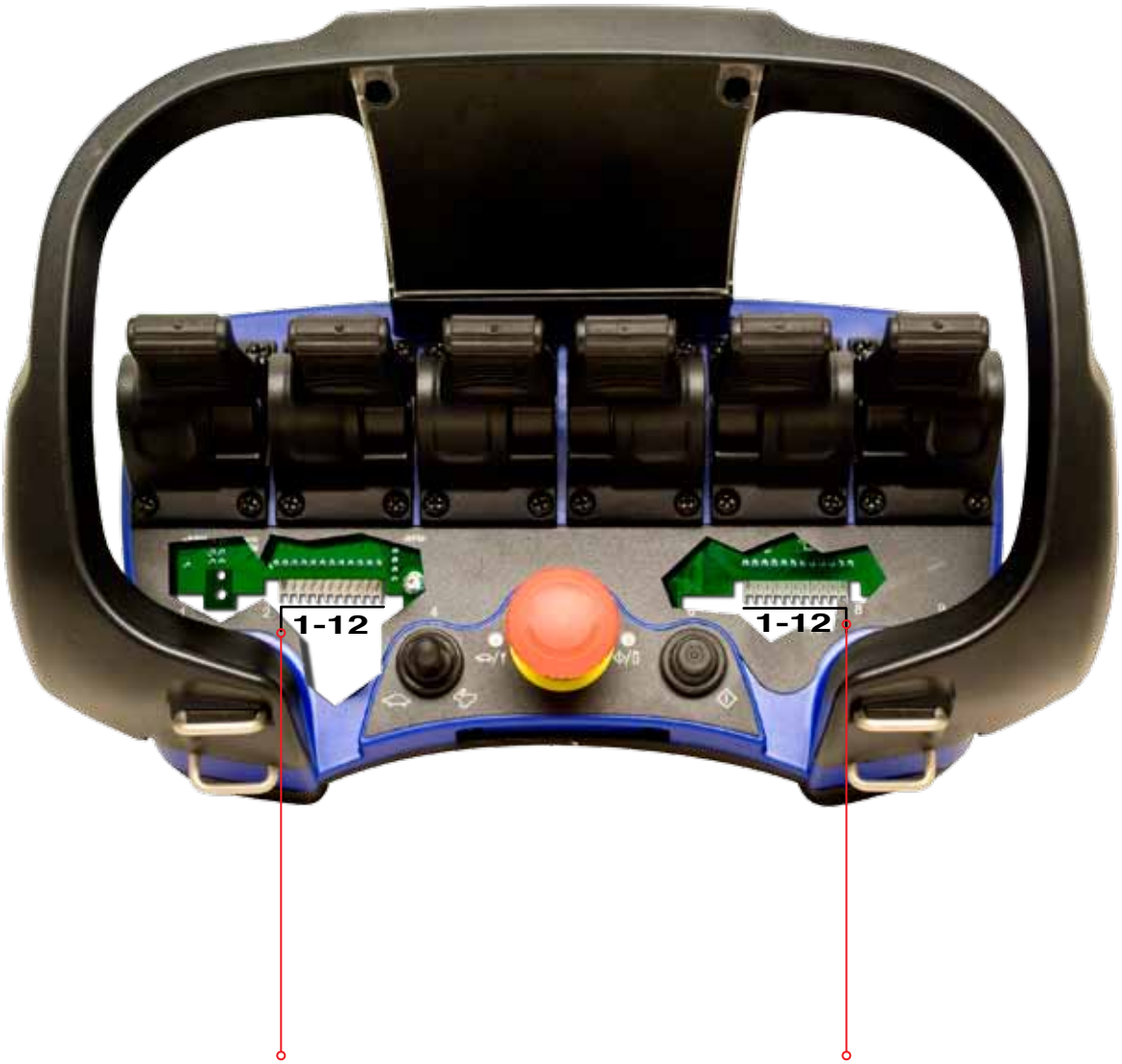

No.	Type	Colour code	AMP Pin no.
-	Common (GND)	Black	1
10	Digital input 33	Pink	2
9	Digital input 06	Grey	3
8	Digital input 02	Brown	4
7	Digital input 32	Purple	5
6	Digital input 05	Orange	6
5	Digital input 31	Black	7
4	Digital input 07	White	8
3	Digital input 04	Blue	9
2	Digital input 03	Green	10
1	Digital input 01	Yellow	11
-	Supply output	Red	12

No.	Type	Colour code	Amp Pin no.
-	Common (GND)	Black	1
20	Digital input 36	Pink	2
19	Digital input 35	Grey	3
18	Digital input 34	Brown	4
17	Digital input 37	Purple	5
16	Digital input 08	Orange	6
15	Digital input 09	Black	7
14	Digital input 13	White	8
13	Digital input 12	Blue	9
12	Digital input 11	Green	10
11	Digital input 10	Yellow	11
-	Supply output	Red	12

5.4 Digital functions

The digital functions utilized varies depending on system configuration, up to 20 digital functions can be implemented thru left- and/or right switch panels with programmable assignments to up to 14 digital outputs.

In excess the On-button may also be assigned a digital output.

Below shows PCU platforms standard digital inputs and default Central Unit output assignment

PCU MINI Standard assignment

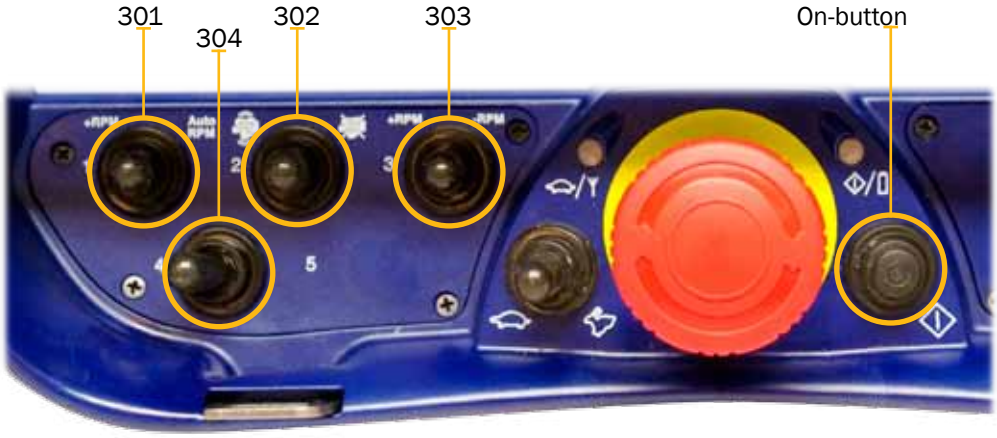

PCU MAXI Standard assignment

Position	Type	Central Unit
301	3 way detent toggle	Digital output 1 / Digital output 1 Parallel with analogue input movement (AutoRPM engine feature)
302	3 way spring back toggle	Digital output 2 / Digital output 3 (Engine start / Engine stop)
303	3 way spring back toggle	Digital output 4 / Digital output 5 (Engine RPM+ / Engine RPM-)
304/305	2 way detent toggle	Digital output 6 (Optional)
On-button	Push button	Digital output 7

5.5 Terminal schematics for current controlled Central Unit G2B

The drawing below declares access points for each available input and output both from the inside terminal (above) and the standard cable kits (below). Standard cable wire number/marking is also declared.

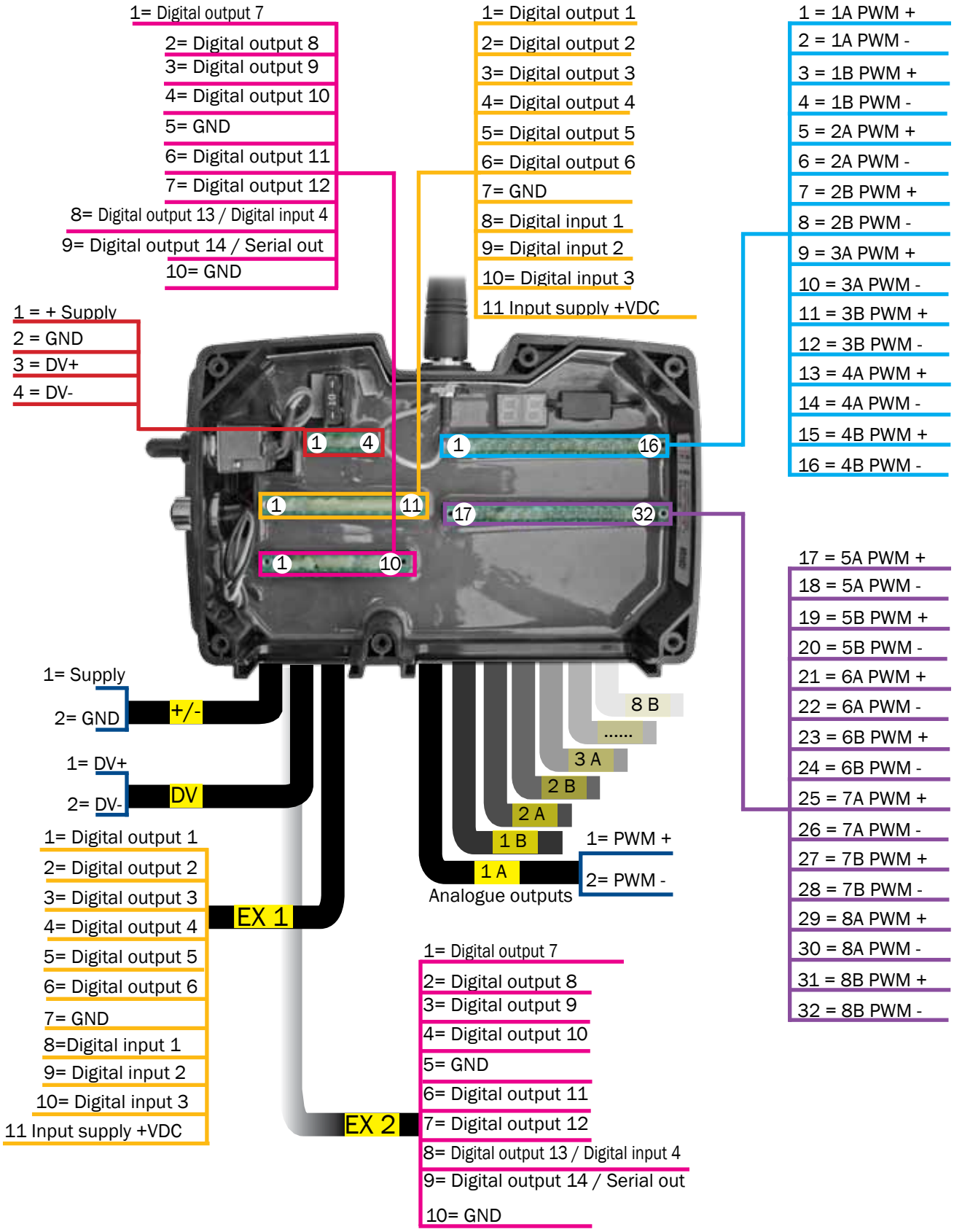

5.6 Terminal schematics for voltage controlled Central Unit G2B

The drawing below declares access points for each available input and output both from the inside terminal (above) and the standard cable kits (below). Standard cable wire number/marking is also declared.

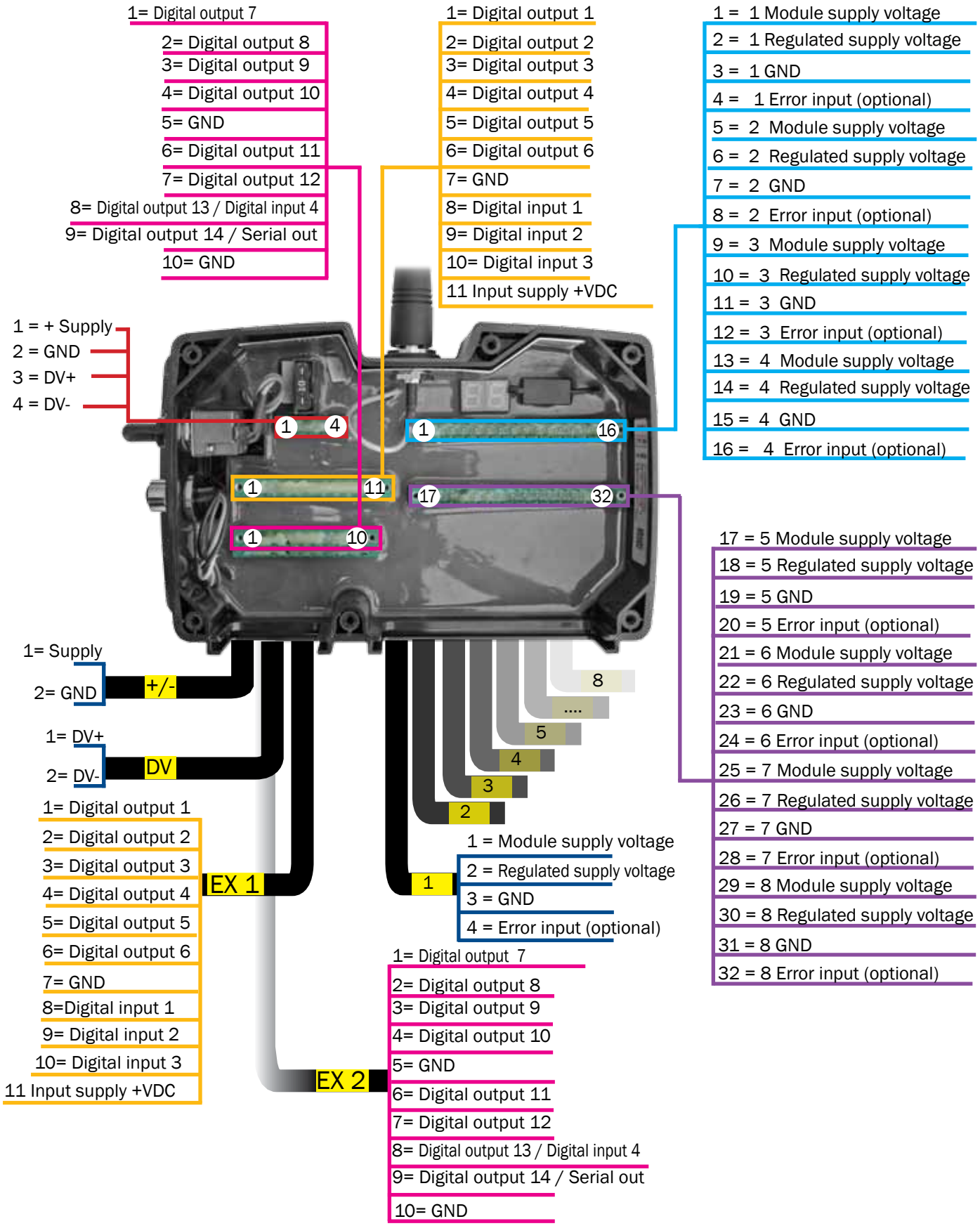

5.7 Terminal schematics for Central Unit G2B CAN interface

The Central Unit is equipped with terminal connections for CAN. The drawing below declares the access points both from the inside terminals (above) and the standard cable kit (below).

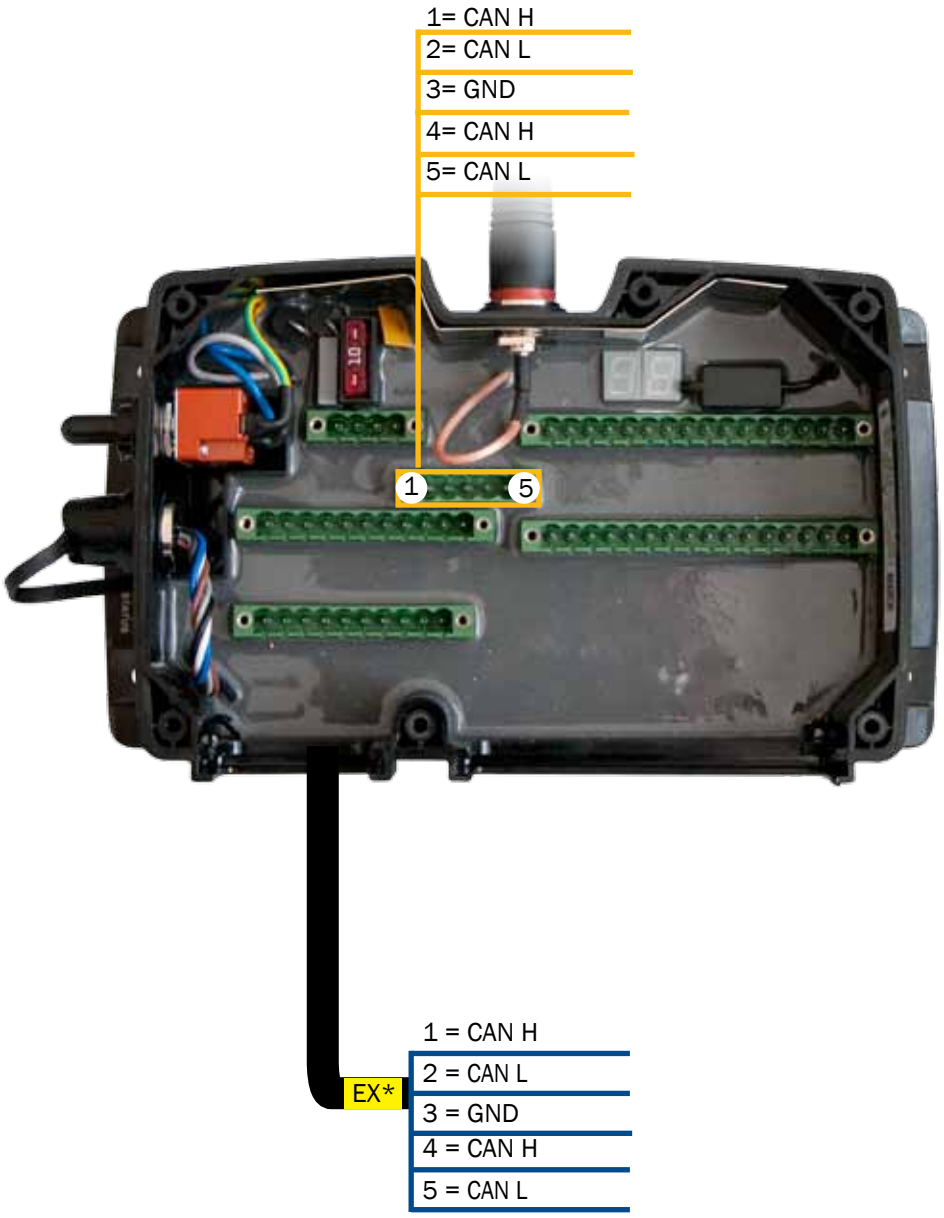

NOTE:

* as various cable kits exists, please refer to chapter 13 or system technical specification for further information

The Central Unit G2B is not equipped with a specific “STOP loop” connection, if needed a digital output are in such cases assigned; if more info is required; refer to system technical specification.

If required; a terminator resistor can be installed between points 4 & 5: the resistor value needs to be defined by the system installer.

5.8 Connection schematics for Central Unit G3B

The Central Unit G3B is equipped with either 2 or 3 circular M12 5-pole connectors (check item no). The drawing below declares Pin-assignments for both versions of the Central Unit G3B

Item no: 1602, 1603

Item no: 1604, 1605

Cable A (3 meters)

Connection	
Pin no.	Colour / Function
1	Brown / DV1
2	White /Power supply
3	Blue / GND
4	Black / CAN_HIGH
5	Grey / CAN_LOW

5- pole male
M12 connector

Cable B (3 meters)

Connection	
Pin no.	Colour / Function
1	Brown / DATA
2	White /GND
3	Blue / RS 232 TX
4	Black / RS 232 RX
5	Grey / Supply output

5- pole female
M12 connector

Cable C (3 meters)

Connection	
Pin no.	Colour / Function
1	Brown / DV2
2	White / LOOP1_OUT
3	Blue / LOOP1_IN
4	Black / LOOP2_OUT
5	Grey / LOOP2_IN

5- pole male
M12 connector

6 Operational indications

6.1 Central Unit status and operational indications

The Central Unit G2B is equipped with 2 individual positions where status and operational indications can be read, the external LEDs STATUS and DV provides basic limited information whilst the LED display provides more detailed information, the Central Unit G3B only have the LED-display as shown below.

Position 4: Status LEDs

Position 5: LED-display

External LEDs (on Central Unit G2B only!)

LED STATUS	Meaning
OFF	Off, Central Unit is deactivated
RED	ON – Central Unit is activated in REMOTE mode No communication with PCU
GREEN	ON – Central Unit is activated in REMOTE mode Communication link with Portable Control Unit
RED flashing 4/1	Error code being displayed on internal LED Display

LED DV	Meaning
RED	Dump Valve output is supplied

Note that the LED STATUS is used also for error code alarms and operator controlled functions and is then triggered by an event, the type of indication will be declared for each event further in this document.

6.2 Central Unit LED-display

Below table shows the variety of status indications available for both the Central Unit G2B and G3B:

LED Display	Meaning
	Off, deactivated
	Standby mode, no communication link with PCU
1P	Standby mode, communication link with PCU
1-	Communication link via cable, ID-code approved
2-	Communication link via cable, ID-code not approved
1H	Communication link via radio, frequency hopping
10	Communication link via radio, frequency locked on channel 1
11	Communication link via radio, frequency locked on channel 2
12	Communication link via radio, frequency locked on channel 3
13	Communication link via radio, frequency locked on channel 4
14	Communication link via radio, frequency locked on channel 5
15	Communication link via radio, frequency locked on channel 6
16	Communication link via radio, frequency locked on channel 7
17	Communication link via radio, frequency locked on channel 9
18	Communication link via radio, frequency locked on channel 10
19	Communication link via radio, frequency locked on channel 11
1A	Communication link via radio, frequency locked on channel 12
1b	Communication link via radio, frequency locked on channel 13
rA oF	Radio communication deactivated via program setting (WinSCI)
Pb Id	ID-programming procedure is active (See chapter 12 for further info)
bL	ID-programming procedure rejected (See chapter 12 for further info)

6.3 Portable Control Unit status indications

The Portable Control Unit uses 2 LEDs to indicate operational status, the Portable Control Unit is also equipped with an internal buzzer that emits sounds and alarms when required.

Typical status indications involving the Micro- and Power-LED are declared below:

Power-LED	Meaning
OFF	Off, Portable Control Unit is deactivated
RED Fixed	ON – Transmitting data
RED Flashing 1/1 sec.	ON – Transmitting data Low battery! (Buzzer will emit an alarm for the first three sequences when low level is detected)

Micro-LED	Meaning
OFF	Normal mode
Green Flashing 1/3th sec.	Micro step 1 active
2 / 3rd sec	Micro step 2 active
3 / 3rd sec	Micro step 3 active
4 / 3rd sec	Micro step 4 active
5 / 3rd sec	Micro step 5 active

Note that these LEDs are used also for error code alarms and operator controlled functions and are then triggered by an event, the type of indication will be declared for each event further in this document.

7 Error code indications

7.1 General description

Both the Portable Control Unit and the Central Unit are embedded with constant fault monitoring, any errors noticed by the system will result in interruption of all operational commands.

7.2 Central Unit Error codes

All of the Central Units outputs are fault monitored for short circuits and/or overloads, in the event of an error being detected the Central Unit will alert that an error has occurred via the external LED Status and indicate the appropriate error code via the LED-display, the Central Unit will then reset to operational mode if possible.

Below example flowchart on behaviour:

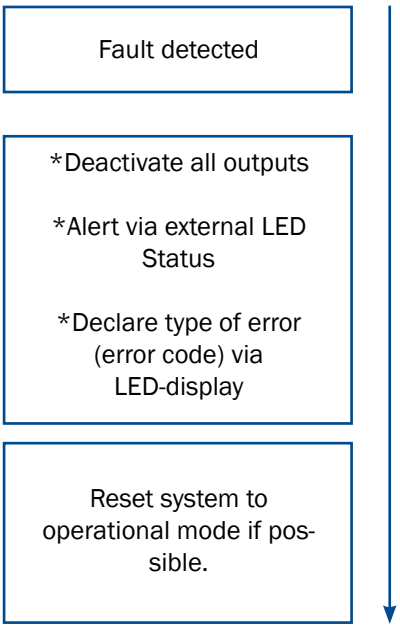

This fault sequence will take an approximately 6 seconds The external LED STATUS will flash rapidly in red colour declaring that an error has been detected, for more detailed information; the LED-display must be monitored (or error code log available from diagnostics menu).

The LED-display Error codes are displayed in up to 3 sequences, this allows the Central Unit to declare exactly which output that is related to the error (where applicable).

First sequence: Letters E:r is presented declaring an error code

Second sequence: Type of error code

Third sequence: Additional information (where applicable)
In example:

(Repeated 3 times)

The example would imply that there is an short circuit on output 1A

7.2.1 Error codes

2nd	3rd	Description	Cause	Action
01.	01	EEPROM failure.	Incorrect checksum on EEPROM, last stored data will be set.	Reset system, if persistent; Re-load application program.
01.	02	Flash memory failure.	Incorrect checksum on flash memory.	Reset system, if persistent; Re-load application program.
01.	03	Stack memory failure.	Incorrect sizes of data in CANopen protocol, incorrect dataflow or stack overflow.	System will self reset automatically. If persistent; Re-load application program.
01.	04	RAM memory failure.	Incorret RAM and/or hardware identification.	System will self reset automatically. If persistent; Re-load application program.
02.	01	Illegal voltage; DVoutput.	DV-output error; DV-output (DV+) externally supplied	System will self reset. Check DV-output connection. Remove terminal connector and reset system.
02.	02	Short circuit; DV-output.	DV-output error; DV output (DV+) short circuited or overloaded.	System will self reset. Check DV-output connection. Remove terminal connector and reset system.
02.	03	Safety switch error	Safety switch output read back error, incorrect voltage (High instead of Low)	System will self reset. Remove all terminal connectors and reset system.
02.	04	Safety switch error	Safety switch output read back error, incorrect voltage (Low instead of High)	System will self reset. Remove all terminal connectors and reset system.
03.	00	Illegal voltage; Digital output	Digital output (1-14) illegal voltage, expected low signal but read as high (Could be any of the available 14	System will self reset. Check digital output connections. Remove terminal connector and reset

7.2.1 Error codes (continued)

2nd	3rd	Description	Outputs	system
04.	00	Short circuit; Digital output	Digital output (1-14) short circuited or overloaded (Could be any of the available 14 outputs)	System will self reset. Check digital output connections. Remove terminal connector and reset system.
05.	00	Error input triggered (Danfoss CU only).	Error signal for Danfoss valve triggered (Could be any of the available 8 inputs)	System will self reset. Check analogue output connections. Remove terminal connector and reset system.
06.	x	Illegal voltage analogue output	Wrong voltage on analogue output (3rd sequence declares related output; 1A,1B....).	System will self reset. Check analogue output connections. Remove terminal connector and reset system.
07.	x	Illegal voltage analogue output	Wrong current on analogue output (3rd sequence declares related output; 1A,1B....).	System will self reset. Check connections. Remove terminal connector and reset system.
08.	01	CAN Passive	CAN bus in passive mode.	System will self reset. Check CAN connections. Check other nodes on bus and reset system.
08.	02	CAN I/O Buffer overflow	CAN overrun; either the CAN input or CAN output buffer are full	System will self reset. Reset system, re-initiate via CAN controller.
08.	03	CAN physical layer error	Bad communication/transmission	System will self reset. Check CAN connections. Check other nodes on bus and reset system.
08.	04	CAN PDO length exceeded	PDO length is to long	System will self reset. Reset system, re-initiate via CAN controller.
08.	05	CAN PDO length error	PDO length is too short	System will self reset. Reset system, re-initiate via CAN controller.
08.	06	CAN Transmit COB-ID collision	To many collisions on CANbus	System will self reset. Check CAN connections. Check other nodes on bus and reset system, re-initiate via CAN controller.
10.	00	PCU failure; Emergency stop	Error transmitted from PCU: Illegal signal from PCU emergency stop switch	System will self reset. Check emergency stop switch on PCU
11.	00	PCU failure; Analogue input	Error transmitted from PCU: Analogue input active on start-up	System will self reset. Ensure all analogue inputs on PCU are at zero/neutral position. Restart PCU.
12	00	PCU failure; Analogue input	Error transmitted from PCU: Signal redundancy test; illegal signal from analogue input.	System will self reset; Diagnose PCU via TEST MODE
13.	n/a	PCU failure; Analogue input	Error transmitted from PCU: Signal redundancy test; illegal signal from analogue input.	System will self reset; Diagnose PCU via TEST MODE

7.2.1 Error codes (continued)

14.	01	ID programming failure	ID-code and/or parameter settings not accepted.	System will self reset. Verify ID-programming procedure. Reset application program.
14.	02	Program failure	Programmable logic parameter error	System will self reset. Reset application program.
15.	x	PWM output failure	Analogue output short circuited or overloaded. (3rd sequence declares related output; 1A,1B....).	System will self reset. Check analogue output connections. Remove terminal connector and reset system.
16.	x	PWM output failure	Analogue output not connected (Programmable feature). (3rd sequence declares related output; 1A,1B....).	System will self reset. Check analogue output connections. Remove terminal connector and reset system.
17.	01	Low supply power	Low power supply (Below 8,5 VDC)	System will self reset. Check power supply and supply connections.
17.	02	High supply power	High power supply (Above 36,0 VDC)	System will self reset. Check power supply and supply connections.
98.	n/a	Undefined PCU error	Undefined error in PCU.	Diagnose PCU via TEST MODE
99.	n/a	Undefined CU error	Undefined error in CU.	System will self reset. Remove all terminal connectors Check power supply and supply connections. Reset system.

7.3 Portable Control Unit error codes

The Portable Control Unit monitors all analogue and digital inputs for faults and uses the Power-LED and BUZZER to indicate alarms.

Below available error codes:

Indications	Meaning
1	Analogue input 1 not at zero position during start-up
2	Analogue input 2 not at zero position during start-up
3	Analogue input 3 not at zero position during start-up
4	Analogue input 4 not at zero position during start-up
5	Analogue input 5 not at zero position during start-up
6	Analogue input 6 not at zero position during start-up
7	Analogue input 7 not at zero position during start-up
8	Analogue input 8 not at zero position during start-up

8 Radio

8.1 General description

Radio is used as a bus link for data packages between the transmitter (Portable Control Unit) and receiver (Central Unit), the radio continuously transmits the positions of the analogue and digital inputs available on the Portable Control Unit to the Central Unit for further processing.

The digitalized data transfer protocol uses a high security level for verification of each data package, no loss of individual functions due to radio interferences can occur.

The unique ID-code held in the Portable Control Unit ensures that the system can not be operated unintentionally by other Control Unit.

The transmission allows interferences to some extent as long as multiple data packages are not interfered successively.

8.2 Determining radio quality

The radio quality can be determined by the external status LED and/or the first 7- segment on the LED-display during radio communication

When an optimal communication is acquired the external Status LED will be fixed green and the Central Unit LED-display will indicate “1x” (x being dependent on program setting).

Short interruptions and losses of data packages will be indicated by irregular flashes of these indicators, an increasing intensity of flashes indicates a decreasing radio reception.

Note that irregular flashes is a common occurence, unless they cause an interuption in communication they should not be considered a cause for concern.

NOTE:
In such cases that a locked frequency is used the second 7-segment indication will be different, check chapter 6.2 for further information.

8.3 Radio channel / Frequency

Refer to separate document for radio channel used in your region

8.4 Range

Refer to separate document for radio channel used in your region

9 Diagnostics mode

9.1 General description

A diagnostics mode has been made available as to diagnose and manage the system, the LED-display is required to be monitored during diagnostics and will allow operator to read out recently occurred error codes, output characteristics and program information in order to diagnose the system.

9.2 Activating diagnostics mode

Note that the LED-display is required to be monitored during diagnostics mode.

Do as follows:

1. Remove the battery pack. Connect the cable between the Portable Control Unit and turn off the Central Unit via the R/M-switch.

2. Activate the Central Unit in REMOTE mode.

3. Press the Portable Control units On-button once.
-The Power-LED should be illuminated

4. Produce impulses in very quick succession with the Micro-toggle to the LEFT (MICRO-ON direction) 15 times or until the Central Units LED-display indicates D:i – 0:0.

5. Diagnostics mode is now active!

The diagnostics mode consist of 8 different menus' that can be toggled using the on-button, once a menu is entered the current values for that specific parameter is presented in the LED-display.

To exit diagnostics mode press Stop-button on Portable Control Unit.

If activation fails, the 4th step may have been done too slow, the toggle has to be done with a maximum 0,5 second interval.

Attention:
Note that system will operate outputs as in normal operational mode, real-time values (where available) are shown in the LED-display.

Note that by entering the diagnostics mode, the Micro function has been activated and analogue outputs may operate reduced speeds, if full speeds are desired; press Micro-toggle to the right once (MICRO-OFF direction).

9.3 Table / diagnosics data

Position / LED Indication	Meaning
D:i - 0:0	Default position
D:i - 0:1	Analogue output status
D:i - 0:2	Digital output status
D:i - 0:3	Digital Input status
D:i - 0:4	Error code Log
D:i - 0:5	Program save
D:i - 0:6	Program load
D:i - 0:7	Central Unit firmware version
D:i - 08	Portable Control Unit firmware version
-	Return to position 00

9.3.1 Position 1 - Analogue output status

Press On-button once from position D:i – 0:0

D:i – 0:1 is displayed

As to determine the current status for all analogue outputs. Lever/joystick assignments and analogue output start, stopp and ramp values.

While in this position, actuating a specific lever will result in the LED-display presenting which output that is assigned, the direction and the current real time value.

In example:

Lever is actuated, display responds by indicating related output for 1 second

In example

1:A, 2:A, 3:A, 4:A, 5:A, 6:A, 7:A, 8:A, 1:b, 2:b, 3:b, 4:b, 5:b, 6:b, 7:b, 8:b

Followed by the current value in correspondance to lever angle.

1-99, h:i*

*h:i indicating that 100% velocity is achieved

9.3.2 Position 2 - Digital output status

Press On-button two times from position D:i – 0:0

D:i – 0:2 is displayed for 1 second, the LED-display will then toggle all Central Unit digital outputs and present current value (High or Low)

O:n – 0:1 - 0:1 or 0:0 (High/Low)

O:n – 0:2 - 0:1 or 0:0 (High/Low)

O:n – 0:3 - 0:1 or 0:0 (High/Low)
...
O:n – 1:4 = 0:1 or 0:0 (High/Low)

As to determine the current status for all digital outputs.

While in this position the LED display will present each digital output from 1 to 14, high or low, continuously

9.3.3 Position 3 - Digital input status

Press On-button three times from position D:i – 0:0

D:i – 0:3 is displayed for 1 second, the LED-display will then toggle all Central Unit digital inputs and present current value (High or Low).

i:n – 0:1 - 0:1 or 0:0 (High/Low)

i:n – 0:2 - 0:1 or 0:0 (High/Low)

i:n – 0:3 - 0:1 or 0:0 (High/Low)

i:n – 0:4 - 0:1 or 0:0 (High/Low)

As to determine the current status for all digital inputs.

While in this position the LED-display will present each digital input from 1 to 4, high or low, continuously

9.3.4 Position 4 - Error code log

Press On-button four times from position D:i – 0:0

D:i – 0:4 is displayed for 1 second, the LED-display will then toggle the 5 most recent error codes that have been triggered in the Central Unit.

As to determine faults registered by the Central Unit, refer to chapter 7 for error code information.

The LED-display will toggle the logged error codes continuously.

9.3.4.1 Clear error code log

Hold Micro-toggle in LEFT position for 5 seconds

E:r – C:L is displayed in the LED-display (Error Clear)

Release and press Micro-toggle once more to LEFT position to confirm.

Central Unit error code logg is cleared.

An error code clear is suitable to conduct after service!

9.3.5 Position 5 - Program save

Press On-button five times from position D:i – 0:0

D:i – 0:5 is displayed

Press and hold Micro-toggle in LEFT position for 3 seconds

C:o – F:A is displayed

Release and press Micro-toggle once more to LEFT position to confirm and store the current settings

Saves the current settings for DIRECTION and SPEEDS (START, STOPP, MICRO, RAMP) and DV-delay time as back-up for eventual future program load, see below chapter “program load”.

9.3.6 Position 6 - Program load

Press On-button six times from position D:i – 0:0

D:i – 0:6 is displayed

Press and hold Micro-toggle in LEFT position for 3 seconds

P:o – F:A is displayed

Release and press Micro-toggle once more to LEFT position to confirm and load the settings previosly stored

Enables a reset to previously stored application program setting “Program save”

9.3.7 Position 7 - Central Unit program version

Press On-button seven times from position D:i – 0:0

D:i – 0:7 is displayed followed by current firmware version

V:n – n:n

The current version of the Central Units program is presented in two sequences, continuously repeated

In example:

+

9.3.8 Position 8 - Portable Control Unit program version

Press On-button eight times from position D:i – 0:0

D:i – 0:8 is displayed followed by the current firmware version

V:n – n:n

The current version of the Portable Control Units program is presented in two sequences, continuously repeated

10 Online Programming mode

10.1 General description

The Scanreco RC 400 offers considerable possibilities for system constructors of hydraulically driven mobile cranes and machines. The program in the control system is very comprehensive, flexible and has many adaptation possibilities for specific applications. The control system offers simple programming of a number of functions which can easily be turned on or off or altered during operation.

To obtain the best manoeuvre characteristics in the simplest way, all programming / calibration of manoeuvre characteristics is made during operation (so called on-line programming). All programming / calibration is made from the Portable Control Unit.

Programming is simple and does not require tools / instruments.

The installer/system designer is responsible for seeing that system is used correctly and is responsible for any re-programming of the system functions and the characteristics changes caused by this!

The system has 4 levels of authorisation:

Authorisation level 1. (Installer)
Change direction of analogue movement

Authorisation level 2. (Well trained installer, well trained service personnel)

Change direction of analogue outputs A/B

Change start speeds for analogue outputs

Change stop speeds for analogue outputs

Change micro speed for analogue outputs

Change ramp speeds for analogue outputs

Authorisation level 3. (Well trained crane and valve manufacturer, well trained system constructor)
Not declared in this document

Authorisation level 4. (Scanreco AB)
Not declared in this document

IMPORTANT SAFETY NOTE:
In online programming mode, when you select a programming step, the system automatically activates the speeds of the corresponding selected lever. Speeds used are independent by SET selected in the system and depend only by programming step in which you are.

EXAMPLE:
Even if the system is working in SET1 (SET1 argument is valid), when you enter in the programming mode step no. 8 (SET2), the system will activate and work with the speeds of SET2

10.2 Activating online programming mode

The Central Units LED-display or Portable Control Units acoustic step signalling is required to be monitored during programming mode, check the table (10.3) for the indications given.

Do as follows:

1. Remove the battery pack. Connect the cable between the Portable Control Unit and the Central Unit and test run the system.

2. Press the Stop-button on the Portable Control Unit and deactivate the Central Unit via the R/M-switch.

2. Twist up the Stop-button on the Portable Control Unit and activate the Central Unit in REMOTE mode.

3. Press the Portable Control Units On-button once.
-The Power-LED should be illuminated

4. Produce impulses in very quick succession with the Micro-toggle to the RIGHT (MICRO-OFF direction) 10 times or until the Portable Control Unit gives a long beep signal and the Central Units LED-display indicates P:o – 0:0.

5. Online programming mode is now active, The online programming mode consist of 15 different menu's that can be toggled using the On-button, once a menu is entered the Central Units LED-display will indicate the current parameter value of any actuated analogue output, MICRO-ON (left) will decrease the value and MICRO OFF (right) will increase the value.

To exit online programming mode press the Stop-button on the Portable Control Unit.

If activation fails; the 4th step may have been done too slow, the toggle has to be done with a maximum 0,5 second interval.

Attention:
Note that the system will operate outputs as in normal operational mode!

Online programming is done in real time, any parameters set are immediately effecitve!

If not satisfied with the new settings you may be able to retrive previous/default parameter setting via the diagnostics mode, load program.

10.3 Table / Programming options

Position via CU LED Indication	PCU Acoustic signal (L=Long, S=Short)	Meaning
P:0 - 0:0	1L	Start / Default position
P:0 - 0:1	1S	Direction
P:0 - 0:2	2S	Start value SET1
P:0 - 0:3	3S	Stop value SET1
P:0 - 0:4	4S	Micro value SET1
P:0 - 0:5	1L, 1S	Ramp delay up SET1
P:0 - 0:6	1L, 2S	Ramp delay down SET1
P:0 - 0:7	1L, 3S	Start value SET2
P:0 - 0:8	1L, 4S	Stop value SET2
P:0 - 0:9	2L, 1S	Micro value SET2
P:0 - 1:0	2L, 2S	Ramp delay up SET2
P:0 - 1:1	2L, 3S	Ramp delay down SET2
P:0 - 1:2	2L, 4S	Start value SET3
P:0 - 1:3	3L, 1S	Stop value SET3
P:0 - 1:4	3L, 2S	Micro value SET3
P:0 - 1:5	3L, 3S	Dump valve delay time
-		Return to position 00

10.3.1 Position 01 - Direction

For individual adjustment of the direction of lever movement
Available values
0 or 1 (Normal or reversed direction)

When actuating a lever/joystick the LED-display will indicate which output that is active and its corresponding direction.

Example:
1:b – 0:1 meaning reversed direction is enabled for output 1

10.3.2 Position 02 - Start speed SET1

For individual adjustment of start speed
Available values:
Values ranging from 1-100

When activating a lever/joystick the LED-display will indicate which output that is active and its corresponding start speed.

Example:
2:A – 2:0 meaning that the start speed is set to 20% of the maximum velocity on output 2A

10.3.3 Position 03 - Stop speed SET1

For individual adjustment of stop speed
Available values:
Values ranging from 1-100

When activating a lever/joystick the LED-display will indicate which output that is active and its corresponding start speed.

Example:
3:b – h:I meaning stop speed is set to 100% of maximum velocity on output 3B

10.3.4 Position 04 - Micro speed SET1

For individual adjustment of 1st step micro speed
Available values:
Values ranging from 1-100

When activating a lever/joystick the LED-display will indicate which output that is active and its corresponding 1st step micros speed.

Example:
4:b – 6:0 meaning micro speed is set to 60% of maximum velocity on output 4B.

10.3.5 Position 05 - Start ramp SET1

For individual adjustment of start ramp
Available values:
Values ranging from 0-100 (0 = No ramp delay, 1-50 = x100 ms delay/step)

When activating a lever/joystick the LED-display will indicate which output that is active and its corresponding start ramp speed.

10.3.6 Position 06 - Stop ramp SET1

For individual adjustment of stop ramp
Available values:
Values ranging from 0-100 (0 = No ramp delay, 1-50 = x100 ms delay/step)

When activating a lever/joystick the LED-display will indicate which output that is active and its corresponding stop ramp speed.

10.3.7 Position 07 - Start speed SET2

For individual adjustment of start speed
Available values:
Values ranging from 1-100

When activating a lever/joystick the LED-display will indicate which output that is active and its corresponding start speed.

10.3.8 Position 08 - Stop speed SET2

For individual adjustment of stop speed
Available values:
Values ranging from 1-99

When activating a lever/joystick the LED-display will indicate which output that is active and its corresponding stop speed.

10.3.9 Position 09 - Micro speed SET2

For individual adjustment of 1st step micro speed
Available values:
Values ranging from 1-100

When activating a lever/joystick the LED-display will indicate which output that is active and its corresponding 1st step micros speed.

10.3.10 Position 10 - Start ramp SET2

For individual adjustment of start ramp
Available values:
Values ranging from 0-100 (0 = No ramp delay, 1-50 = x100 ms delay/step)

When activating a lever/joystick the LED-display will indicate which output that is active and its corresponding start ramp speed.

10.3.11 Position 11 - Stop ramp SET2

For individual adjustment of stop ramp
Available values:
Values ranging from 0-100 (0 = No ramp delay, 1-50 = x100 ms delay/step)

When activating a lever/joystick the LED-display will indicate which output that is active and its corresponding stop ramp speed

10.3.12 Position 12 - Start speed SET3

For individual adjustment of start speed
Available values:
Values ranging from 1-100

When activating a lever/joystick the LED-display will indicate which output that is active and its corresponding start speed.

10.3.13 Position 13 - Stop speed SET3

For individual adjustment of stop speed
Available values:
Values ranging from 1-00

When activating a lever/joystick the LED-display will indicate which output that is active and its corresponding stop speed.

10.3.14 Position 14 - Micro speed SET3

For individual adjustment of 1st step micro speed
Available values:
Values ranging from 1-100

When activating a lever/joystick the LED-display will indicate which output that is active and its corresponding 1st step micros speed.

10.3.15 Position 15 - Dump valve delay time

For adjustment of the dump valve delay time

A lever/joystick is required to be actuated before value can be changed.

Available values:
Values ranging from 0-100 (0= No delay, 1-99= x100 ms delay/step, 100 = Always active*

*The DV output will remain active after lever/joystick actuation until CU is reset,

11 Portable Control Unit self test mode

11.1 General description

To simplify service and faultfinding, the portable control unit can be put into internal self test mode. This means that the service man can easily control the Portable Control unit's switches and manoeuvre levers, without the need to open the Portable Control Unit. When each switch or manoeuvre lever is activated / manoeuvred the Portable Control Unit gives a "beep - signal" to confirm that the function is working.

11.2 Activating Portable Control Unit Self Test Mode

1. Press the Stop-button on the Portable Control Unit to disable it.

2. Twist up the Stop-button and press On-button once so that the Power-LED is illuminated red.

3. Wait approx. 1 seconds from step 2 then press the On-button in quick successions until the Power-LED is distinguished (approx 10 times).

4. Portable Control Unit Self Test Mode is now active

Each time a switch is activated / manoeuvred the control unit should beep.

Each time a manoeuvre lever is activated / manoeuvred a beep signal should be heard from the Portable Control Unit which increases in "sound intensity" along with lever displacement. The control unit beeps with a continuous tone when the manoeuvre lever is manoeuvred to maximum. This gives a confirmation that the control unit's levers have been manoeuvred fully / max. (If a certain manoeuvre lever does not beep there is a fault in the manoeuvre lever, pin / socket contact or in the control unit's electronic card).

When testing of the Portable Control Unit is completed, press down the Stop-button to exit self test mode.

Note:
When self test mode is active no data is transmitted to the Central Unit.

12 ID-code programming

12.1 General description

The unique ID-code required for radio communication is programmed between the Portable Control Unit and Central Unit

The Central Unit may store the ID-code of maximum one (1) Portable Control Unit, if another Portable Control Unit is required to operate the Central Unit via radio the ID-code procedure is required to be done.

The previous ID-code will be overwritten.

12.2 Procedure

1. Remove the battery pack from the Portable Control Unit. Test run the system/application via cable control.

2. Leave the cable control connected between the Portable Control Unit and the Central Unit.

3. Press the Stop-button on the Portable Control Unit and deactivate the Central Unit via the R/M-switch

4. Activate the Central Unit in REMOTE mode, twist up the Stop-button on the Portable Control Unit.

5. Press and hold the On-button on the Portable Control Unit until you get a beep indication (approx 5 seconds). Release the On-button and wait; the Portable Control Unit will beep once followed by the indication “Po-Id” in the LED-display (approx 8 seconds) then further followed by 5 beeps and the deactivate.

6. When ID- programming is completed, remove the cable control, insert battery pack and test run the system/application with radio control.

-If the initial short beep is followed by one long beep, the Central Unit LED-display indication “bL” and Portable Control Unit then deactivates the ID-programming has been rejected, check below for further info.

Note:
Via cable control option you can easily determine via the LED-display if the ID-code is accepted; if the LED-display indicates “2-” the ID-code programming procedure is required prior to radio operation, if the LED-display indicates “1-”; the ID-code has already been programmed/accepted.

Typical reasons to ID-programming failure:

The 5th step, pressing and holdning the on-button, needs to be initialized from max. 10 seconds from activation of the Central Unit.

The cable control cable is damaged, ensure that no battery is inserted in the Portable Control Unit and that the system/application can be operated via cable alone.

The Portable Control Unit deactivates immediately upon start-up, check that the Power-LED remains lit during the procedure, the Power-LED should remain lit until the last 5 beeps can be heard; if the Portable Control Unit deactivates beforehand it has an internal malfunction.

13 G2B Standard Cable Kits

13.1 General description

Various standard cable kits exist to suit certain system configurations and valves/coils.

Typically two sets of cable kits are required, one for power supply and digital functions and one for analogue functions, see below illustration.

1 = Left side; “Supply Cable kit” for power supply and digital functions.
2 = Right side; “Valve Cable kit” for analouge functions.

13.2 Standard Supply cable kits

For connection of power supply input, DV-output, Digital functions and CANBUS.

Central Unit type:
2010
2011
3010
3011

+/- Power supply
See chapter 5.5 - 5.6 for assignments
+/-

DV - Dump Valve output
Hirchmann GDM3009
DV

EX1 - Digital functions
See chapter 5.5 - 5.6 for assignments
EX1

EX2 - Digital functions
See chapter 5.5 - 5.6 for assignments
EX2

EX3 - CANBUS
See chapter 5.7 for assignments
EX3

EX4 - CANBUS
See chapter 5.7 for assignments
EX4

Girder/cable alignment:

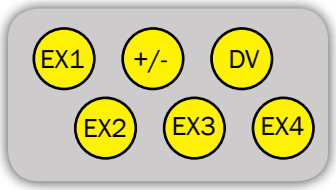

Cable specification:

Cable	Lenght	Wires x Dim.
+/-	2,5 meters	2 x 2,5mm^2
DV	2 meters	2 x 1,0mm^2
EX1	3 meters	11 x 0,5mm^2
EX2	3 meters	10 x 0,5mm^2
EX3	3 meters	5 x 0,5mm^2
EX4	3 meters	5 x 0,5mm^2

Part number information:

Part no:	Output Cables
47979	Power supply, DV & EX1
47752	Power supply, DV, EX1 & EX2
48810	Power supply, DV, EX1, EX2, EX3 & EX4

13.3 Standard valve cable kits for Sauer-Danfoss PVG-32

For connection of analogue functions for Sauer-Danfoss PVG-32 module

Central Unit type:
2010
2011

Girder/cable alignment:

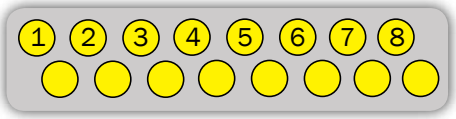

CONNECTOR:
AMP-JPT 4-pol

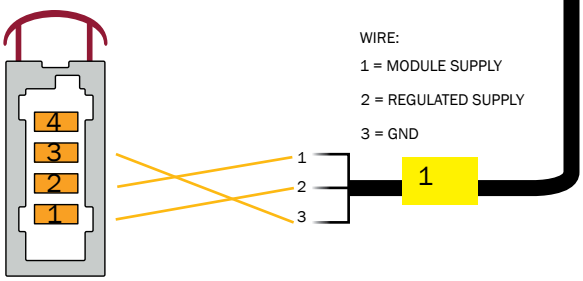

WIRE:
1 = MODULE SUPPLY
2 = REGULATED SUPPLY
3 = GND

CONNECTOR:
Hirchmann GDM3009

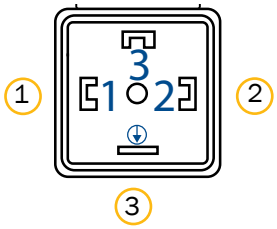

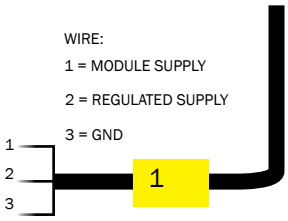

WIRE:
1 = MODULE SUPPLY
2 = REGULATED SUPPLY
3 = GND

Cable specification:

Cable	Lenght	Wires x Dim.
1-8	2 meters	3 x 0,5mm

Part number information:

Part no:	No of outputs	Type of connector
47753	8	AMP-JTP 4-pol
47961	8	Hirchmann GDM3009

13.3 Standard valve cable kits for HAWE

For connection of analogue functions for HAWE module

Central Unit type:
3010
3011

Girder/cable alignment:

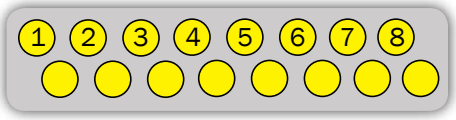

CONNECTOR:
Hirchmann GDM3009

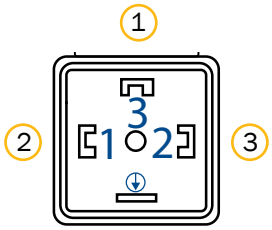

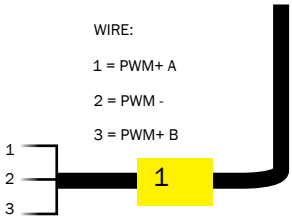

Cable specification:

Cable	Lenght	Wires x Dim.
1-8	2 meters	3 x 0,5mm

Part number information:

Part no:	No of outputs	Type of connector
48046	8	Hirchmann GDM3009

13.3 Standard valve cable kits for PWM solenoids

For connection of analogue functions for PWM solenoids

Central Unit type:
3010
3011

Girder/cable alignment:

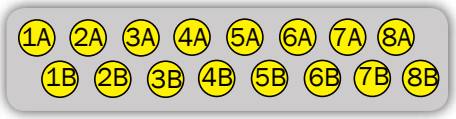

CONNECTOR:
AMP-JPT 2-pol

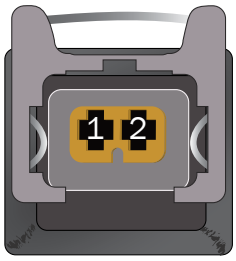

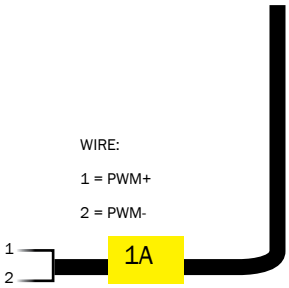

CONNECTOR:
Hirchmann GDM3009

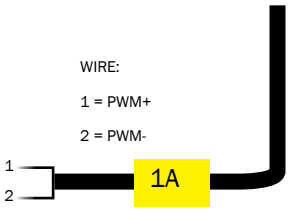

Cable specification:

Cable	Lenght	Wires x Dim.
1-8 (A/B)	2 meters	2 x 0,5mm

Part number information:

Part no:	No of outputs	Type of connector
47925	8 (1A-4B)	Hirchmann GDM3009
47924	12 (1A-6B)	Hirchmann GDM3009
47903	16 (1A-8B)	Hirchmann GDM3009
48238	12 (1A-6B)	AMP-JPT 2-pol
48362	16 (1A-8B)	AMP-JPT 2-pol

Bilag 1

SCANRECO

Radio Remote Control

Bilag 2

ENGINEERING
TOMORROW

Technical Information

PVG 32
Proportional Valve Group

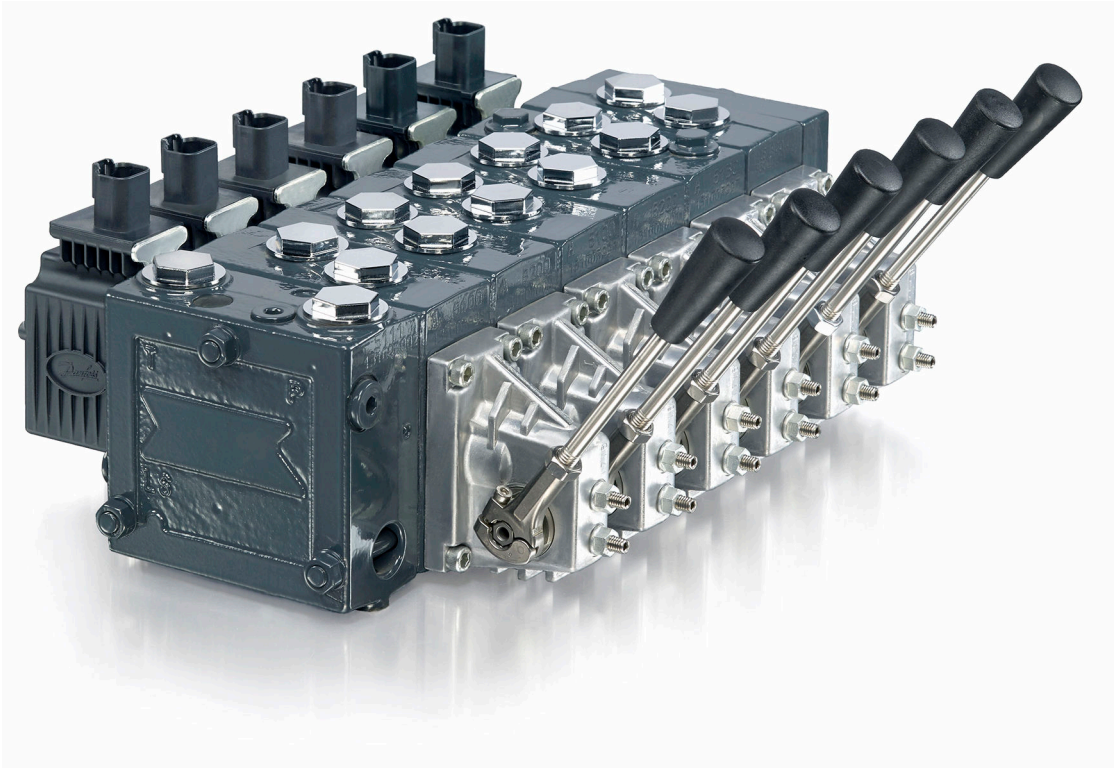

www.danfoss.com

Revision history

Table of revisions

Date	Changed	Rev
December 2018	Major revision of document.	1101
September 2018	Safety topic, new PVBS spools added.	1001
July 2018	Major update.	0901
November 2017	Dimenions section changes.	0803
August 2017	Added informational note to Technical Data section.	0802
March 2016	Pressure-compensated PVB, open center PVP; Characteristics for float position main spools.	0801
February 2006 - March 2016	Various changes	BA - 0710
January 2005	New Edition	AA

Contents

General Information

General Description....7
PVG 32 Features....7
Other technical features....7
Safety in Systems....8
PVG 32 Modules Overview....10

PVP Inlet Modules

Open Center PVP....12
Open Center PVP with PPRV....15
Open center PVP with HPCO and PVE PPRV....19
Closed Center PVP....22
Closed Center PVP with PPRV....24
Closed center PVPV with PPRV....27
Closed center PVPVM with PPRV....29
Open/Closed center PVP with PPRV....31
Open/Closed center PVPM....34

PVP Inlet Module Accessories

PVPX Electrical LS Pressure Unloading Valve....35
Part numbers for PVPX....36
PVPC without Check Valve....38
PVPC with Check Valve....39

PVB Basic Modules

Uncompensated PVB....41
Uncompensated PVB with load drop check valve....44
Uncompensated PVBZ with POC....47
Compensated PVB....48
Dampened Compensated PVB....51
Dampened compensated PVB with LS A/B....54
Compensated PVB with LS A/B....57
Compensated high flow PVB....61
Compensated high flow PVB with LS A/B....64
Compensated PVBZ with POC....68
Compensated high flow PVBZ with POC....70
Compensated high flow PVBZ with POC and manifold interface....73

PVB Basic Modules Accessories

PVLP Shock and Anti-Cavitation Valve....76
PVLA Suction Valve....78

PVSP and PVSPM Priority Modules

PVSP and PSPVM Versions Overview....80
Sectional view of priority modules PVSP/PVSPM....82
Compensator spool for PVSP/PVSPM....83

PVBD Diverter Module

PVBD Diverter Principle....84
PVBD Diverter Module Overview....85

PVBS Main Spools

PVBS fluid flow characteristics—Theoretical performance....87

PVBS Main Spools Part Numbers

Flow Control Spools—Closed Neutral Position....92
Flow Control Spools—Closed Neutral Position with A-float....96
Flow Control Spools—Closed Neutral Position with B-float....96
Flow Control Spools—Closed Neutral Position with A-float for PVMF....98
Flow Control Spools—Closed Neutral Position with B-float for PVMF....98
Flow Control Spools—Closed Neutral Position for PVMR....99
Flow Control Spools—Open/Closed Neutral Position....99
Flow Control Spools—Open/Closed A and Closed B Position....100

Contents

Flow Control Spools—Throttled Open Neutral Position ... 101
Flow Control Spools—Throttled Open Neutral Position for PVMR ... 105
Flow Control Spools—Throttled A to T Neutral Position ... 106
Flow Control Spools—Throttled B to T Neutral Position ... 107
Linear Flow Control Spools—Closed Neutral Position ... 108
Linear Flow Control Spools—Throttled Open Neutral Position ... 109
Linear Flow Control Spools—Open/Closed Neutral Position ... 110
Single Acting Cylinder Flow Control Spools—Neutral A-port Position ... 110
Single Acting Cylinder Flow Control Spools—Neutral B-port Position ... 112
Single Acting Cylinder Linear Flow Control Spools—Neutral B-port Position ... 112
Flow/Pressure Control Spools—Closed Neutral Position ... 113
Flow/Pressure Control Spools—Throttled Open Neutral Position ... 113
Flow/Pressure Control Spools—Throttled Open B to T in Neutral Position ... 114
Flow/Pressure Control Spools—Throttled Open A to T in Neutral Position ... 116
Flow/Pressure Control Spools—Throttled Open B to T in Neutral Position ... 117
Flow/Pressure Control Spools—Open/Closed in Neutral Position ... 117
Flow/Pressure Control Spools—Closed A and Open/Closed B Position ... 117
Pressure Control Spools—Closed Neutral Position ... 118
Pressure Control Spools—Throttled Open Neutral Position ... 119
Pressure Control Spools—Throttled A to T in Neutral Position ... 120
Pressure/Flow Control Spools—Closed Neutral Position ... 121
Pressure/Flow Control Spools—Closed Neutral Position with B-float ... 122
Pressure/Flow Control Spools—Throttled Open Neutral Position ... 122
Pressure/Flow Control Spools—Open/Closed Neutral Position ... 122
Pressure/Flow Control Spools—Open/Closed A and Closed B Position ... 123

PVBS for PVBZ Main Spools Part Numbers

PVBZ Flow Control Spools—Closed Neutral Position ... 124
PVBZ Flow Control Spools—Closed Neutral Position with A-float ... 124
PVBZ Flow Control Spools—Closed Neutral Position with B-float ... 125
PVBZ Flow Control Spools—Throttled Open Neutral Position with B-float ... 126
PVBZ Linear Flow Control Spools—Closed Neutral Position ... 127
PVBZ Single Acting Cylinder Flow Control Spools—Closed Neutral A-port Position ... 127
PVBZ Single Acting Cylinder Flow Control Spools—Closed Neutral B-port Position ... 128
PVBZ Single Acting Cylinder Linear Flow Control Spools—Closed Neutral B-port Position ... 128
PVBZ–HS Single Acting Cylinder Flow Control Spools—Closed Neutral Position ... 128

PVDI Directional Indicator

PVG 32 Actuation

PVM Manual Actuation ... 131
- PVM functionality ... 132
- PVMD/F/R Detention Covers ... 133
- Part Numbers for PVMD/F/R Covers ... 133
- PVML, Spring Centering Cover ... 134

PVH Hydraulic Actuation ... 135
PVHC Electro-Hydraulic Actuation ... 136

PVE Electro-hydraulic Actuation

PVE Series 4 ... 140
- PVEP ... 140
- PVEP Technical Data ... 142

PVE Series 5 ... 144
- PVED-CC Series 5 ... 144
- Operating data overview ... 145
- Connectors ... 146
- LED coloring for PVED-CC Series 5 ... 147
- PVED-CC Hysteresis and Ripple ... 147
- PVED-CC Reaction Times ... 148
- PVED-CC Part Numbers ... 148

PVE Series 7 ... 149

Contents

PVEO....149
PVEO Technical Data....151
PVEO Reaction Times....152
PVEO Part Numbers....152
PVEO-HP....154
PVEO-HP Technical Data....155
PVEO-HP Reaction Times....156
PVEO-HP Part Numbers....157
PVEM....158
PVEM Technical Data....159
PVEM Reaction Times....160
PVE Hysteresis and Ripple....161
PVEM part numbers....161
PVEA....162
PVEA Technical Data....163
PVEA Reaction Times....164
PVE Hysteresis and Ripple....164
PVEA part numbers....164
PVEH....166
PVEH Technical Data....166
PVEH Reaction Times....168
PVE Hysteresis and Ripple....168
PVEH Part Numbers....168
PVES....170
PVES Technical Data....171
PVES Reaction Times....172
PVE Hysteresis and Ripple....172
PVES Part Numbers....172
Connector Overview....174
Extension plates for PVE Series 7....176

Fault Monitoring and Reaction

Generic Fault Reaction....177
Fault Reaction Overview....178
Error Pin Specification....178

Functionality Overview

PWM Voltage Control....179
Float A-Port (-FLA)....180
Float B-Port (-FLB)....180
PVE Power Save....180

Special Features

Direction Indication (-DI)....182
Dedicated Float Pin (UF)....183
Spool Position (SP)....184
Neutral Power-OFF (NP)....185
Disable Mode....186

PVS End Plates

PVS/PVSI....189
PVS/PVSI with LX-connection....191
PVSI with P-, T-, LX- and M-connection....193
PVST with T-connection....194
PVSI Start Plate....195
PVSD End Plate....196
PVSI with PVE PPRV....198
PVST with PVE PPRV and PP dump....200

PVSKM Full Flow Cut Off Modules

PVSKM Functionality....203

Contents

PVSKM Spool 205

PVAS Stay Bolts

PVAS Part Numbers 207
PVG 32 modules total length 208
PVG 32/16 Combinations 208
PVG 256/128/32/16 Combinations 209

PVG 32 Combinations Valve Stack Dimensions

PVG 32 Dimensions 211
PVG 32/16 Dimensions 213
PVG 100/32 Dimensions 215
PVG 120/32 Dimensions 217
PVG 128/32 Dimensions 219
PVG 256/32 Dimensions 221

General Information

General Description

PVG is a hydraulic, load-sensing proportional valve, designed for optimal machine performance and maximum design flexibility. The PVG valve design is based on a modular concept that enables machine designers to specify a valve solution suitable for multiple market segments across multiple applications.

The PVG 32 is a member of the PVG product platform and interfaces to other valve families enabling all machine functions being controlled from one single valve stack.

PVG 32 controls work port flow up to 125 l/min [33 US gal/min] l/min and up to 420 bar [6090 psi] bar work port pressure.

The load independent proportional control valve and high performance actuator technology combined with a low pressure drop design improves the machine performance and efficiency – increasing productivity and reducing energy consumption.

PVG 32 Features

PVG load-sensing proportional valves features and benefits summarized in bullets below:

- Load-independent flow control:
  - Oil flow to an individual function is independent of the load pressure of this function
  - Oil flow to one function is independent of the load pressure of other functions
- Possible combination with the rest of the PVG family, when using an interface module
- Up to 12 basic modules per PVG 32 valve group
- Reliable regulation characteristics across the entire flow range
- Load sense relief valves for A and B port enables reduced energy loss at target pressure
- Several options for connection threads and flange mount
- Compact design, easy installation and serviceability
- Energy-saving
- Low weight

Other technical features

Inlets, work section housing, and actuation methods features are listed below:

Inlets include:

- Built-in pressure relief valve
- Pressure gauge connection
- Versions for different pump types
  - Open center systems with fixed displacement pumps
  - Closed center systems with variable displacement pumps
- Integrated pilot oil supply

Work section housing include:

- Interchangeable spools
- Pressure gauge connection
- Versions for different application needs:
  - Built-in compensator for load independent flow
  - Built-in load holding check valve in P-channel
  - Integrated shock/suction valve
  - Integrated local pressure relief valve

General Information

Actuation methods include:

- Manual control
  - with lever
  - with friction detent
- Hydraulic control
- Electro-hydraulic
  - ON/OFF control
  - Ratiometric proportional control
  - CAN bus proportional control
  - PWM proportional control

Safety in Systems

All types and brands of control valves, including proportional valves, can fail. Therefore, the necessary protection against the serious consequences of a functional failure should always be built into the system.

General safety considerations

For each application an assessment should be made for the consequences of the system in case of pressure failure and uncontrolled or blocked movements.

Warning

Because the proportional valve is used in many different applications and under different operating conditions, it is the sole responsibility of the manufacturer to ensure that all performance, safety and warning requirements of the application is met in his selection of products and complies with relevant machine specific and generic standards.

Control system example

An example of a control system using an aerial lift is shown below:

Aerial lift

General Information

This example breaks down the control system into smaller bits explaining the architecture in depth. Even though many Danfoss components are used in the PVG control system.

The function of the control system is to use the output from the PVE together other external sensors to ensure the PLUS+1 main controllers correct function of the aerial lift.

Electrical block diagram

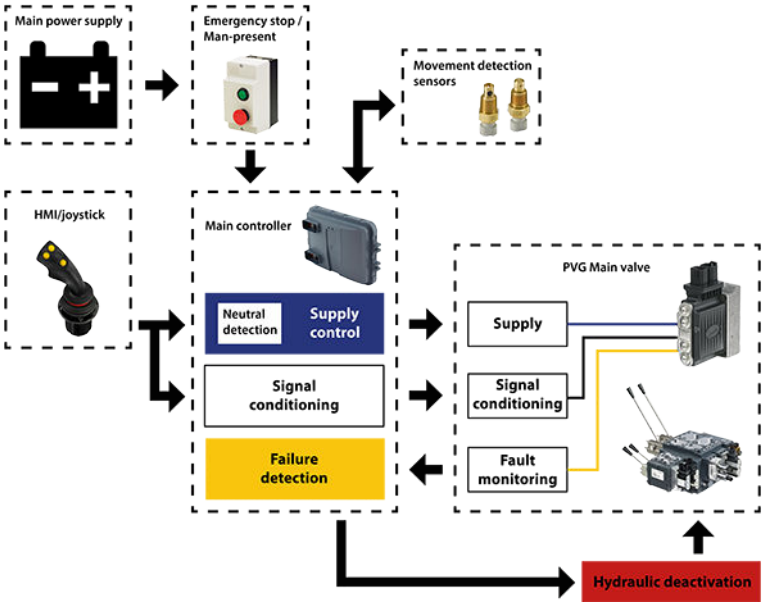

Warning

It is the responsibility of the equipment manufacturer that the control system incorporated in the machine is declared as being in conformity with the relevant machine directives.

Caution

A mix of electrical actuation and hydraulic actuation on the same valve stack is not safe. PVE and PVH are designed for different pilot pressure.

Cost-free repairs, as mentioned in Danfoss General Conditions of Sale, are carried out only at Danfoss or at service shops authorized by Danfoss.

General Information

PVG 32 Modules Overview

PVG proportional valve group shown in the exploded view illustration for a quick modules navigation.

PVG 32 Modules Assembly Overview

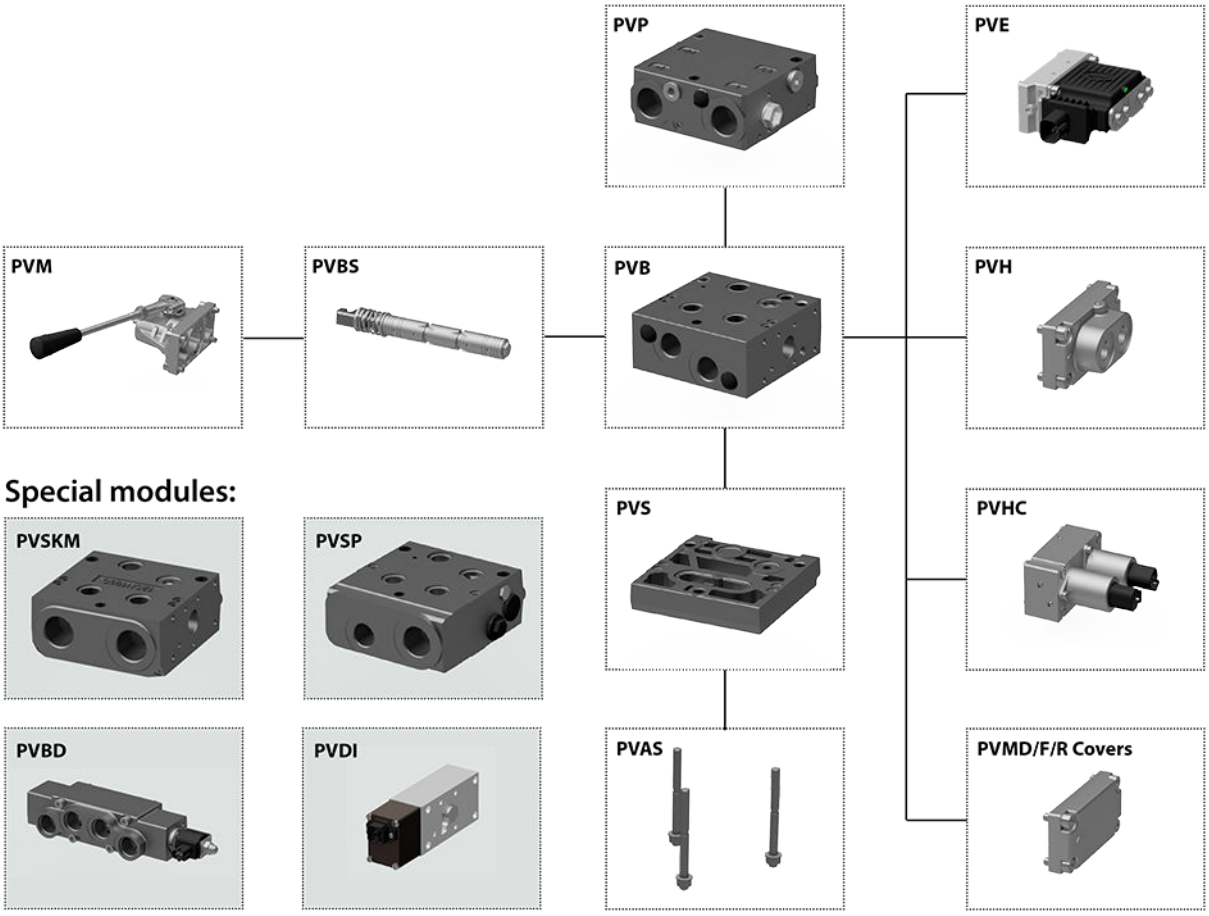

PVG Modules Navigation:

PVP Inlet Modules on page 11 and *PVP Inlet Module Accessories* on page 35

PVB Basic Modules on page 40

PVSP and PVSPM Priority Modules on page 79

PVBD Diverter Module on page 84

PVBS Main Spools on page 86

PVM Manual Actuation on page 131

PVE Electro-hydraulic Actuation on page 138

PVH Hydraulic Actuation on page 135

PVHC Electro-Hydraulic Actuation on page 136

PVDI Directional Indicator on page 129

PVSKM Full Flow Cut Off Modules on page 202

PVS End Plates on page 187

PVAS Stay Bolts on page 207

PVP Inlet Modules

The PVG 32 PVP inlet modules, also referred to as pump side modules, act as an interface between the PVG 32 proportional valve group and the hydraulic pump and tank reservoir.

PVP Inlet Module

PVP inlet module dimensions

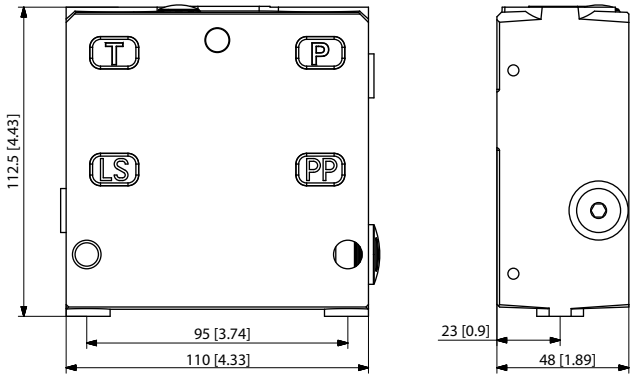

Weight: 3.1 kg [6.9 lb]

Fixed displacement pump symbol

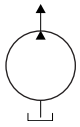

Variable displacement pump symbol

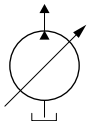

The PVP inlet module variants are based on a generic platform with a selection of additional features, enabling you to tailor the PVP to suit the demands of any hydraulic system:

- *Open Center PVP* on page 12 (for fixed displacement pumps)
- *Open Center PVP with PPRV* on page 15 (for fixed displacement pumps)
- *Open center PVP with HPCO and PVE PPRV* on page 19 (for fixed displacement pumps)
- *Closed Center PVP* on page 22 (for variable displacement pumps)
- *Closed Center PVP with PPRV* on page 24 (for variable displacement pumps)
- *Closed center PVPV with PPRV* on page 27 (for variable displacement pumps)
- *Closed center PVPVM with PPRV* on page 29 (for variable displacement pumps)
- *Open/Closed center PVP with PPRV* on page 31
- *Open/Closed center PVPM* on page 34

PVP Inlet Modules

Open Center PVP

The basic Open Center PVP inlet module is intended for use with fixed displacement pumps in applications, where a valve group with mechanically controlled work sections is desired, or where the pilot pressure to the valve group is supplied externally.

The Open Center PVP features:

- Integrated LS pressure relief valve
- Threaded ports for P/T/LS and M measuring gauge
- Optional LS unloading valve, PVPX
- Optional T0 facility and external T0 port

All modules can be manually activated with the PVM actuation.

Open center PVP schematic

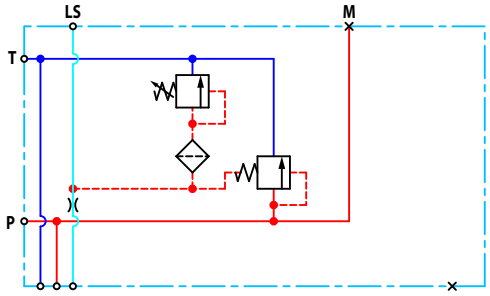

Technical specification for PVP

Max. P-port continuous	Max. P-port intermittent	Max. T-port static/ dynamic	Max. rated flow
350 [5076 psi]	400 bar [5800 psi]	25/40 bar [365/580 psi]	140 l/min [37 US gal/min]

Technical specification

Parameter	Minimum	Recommended range	Maximum
Fluid temperature	-30°C [-22°F]	30 to 60°C [86 to 140°F]	90° [194°F]
Fluid viscosity	4 mm^2/s [39 SUS]	12 to 75 mm^2/s [65 to 347 SUS]	460 mm^2/s [2128 SUS]
Fluid cleanliness	23/19/16 (according to ISO 4406)		
Operating temperature	Ambient: -30 to 60°C [-22 to 140°F]		

PVP Inlet Modules

Theoretical Performance Graphs

Integrated LS pressure relief valve characteristics

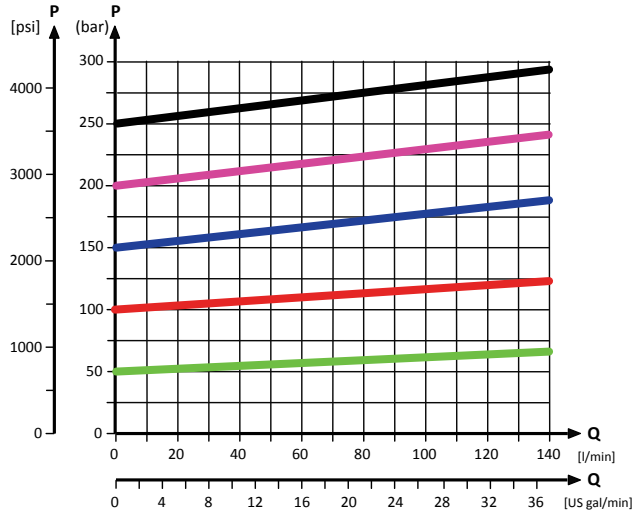

Neutral by-pass pressure drop characteristics

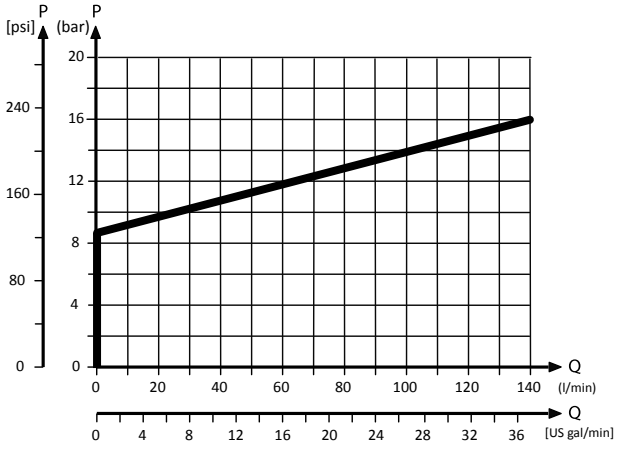

Part numbers for Open Center PVP

Part number	P-port	T-port	LS-, M-port (LS1**)	T0-port	Mounting	PVPX*
157B5000	G1/2″	G3/4″	G1/4″	-	M8	–
157B5100	G3/4″			–		-
157B5102	G3/4″			-		Yes
157B5200	7/8-14 UNF	1 1/16-12 UNF	1/2-20 UNF	-	5/16-18 UNC	-
157B5300	1-1/16 UN			-		-
11008852	G1/2	G3/4	G1/4 (G1/8)	-	M8	-
11030545	G3/4	G3/4	G1/4 (G1/4)	G1/4	M8	-
11053947	G3/4	G3/4	G1/4 (G1/4)	G1/4	M8	-
11151852	1 1/16-12 UNF	1 1/16-12 UNF	9/16-18 UNF	9/16-18 UNF	M8	-
157B5908	1 1/16-12 UNF	1 1/16-12 UNF	1/2-20 UNF	-	M8	-
157B5921	JIS 1/2	JIS 3/4	JIS 1/4	-	M8	-

PVP Inlet Modules

Part numbers for Open Center PVP (continued)

Part number	P-port	T-port	LS-, M-port (LS1**)	T0-port	Mounting	PVPX*
157B5925	JIS 1/2	JIS 3/4	JIS 1/4	-	M8	-
157B5945	G1/2	G3/4	G1/4	-	M8	-
157B5990	1 1/16-12 UNF	1 1/16-12 UNF	-	-	M8	-

** LS1 is an extra LS-port.

* For more information see *PVPX Electrical LS Pressure Unloading Valve* on page 35.

PVP Inlet Modules

Open Center PVP with PPRV

The Open Center PVP inlet with integrated pilot pressure reduction valve (PPRV) is intended for use with fixed displacement pumps in applications, where a valve group with electro-hydraulically or hydraulically controlled work sections is desired (PVE or PVH/PVHC).

The Open Center PVP with PPRV features:

- Integrated LS pressure relief valve
- Threaded ports for P/T/LS and M measuring gauge
- Integrated pilot pressure reducing valve (PPRV) for PVE or PVH/PVHC
- Optional T0 facility and external T0 port
- Optional external pilot pressure port (Pp)
- Optional LS unloading valve, PVPX

All modules can be manually activated with the PVM actuation.

Open center PVP with PPRV schematic

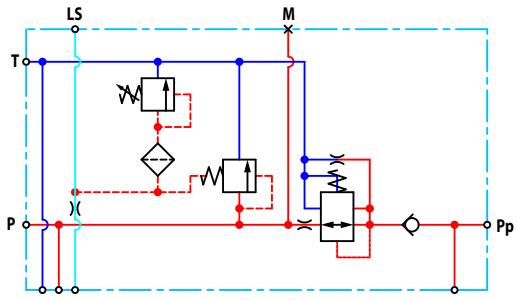

Technical specification for PVP

Max. P-port continuous	Max. P-port intermittent	Max. T-port static/ dynamic	Max. rated flow
350 [5076 psi]	400 bar [5800 psi]	25/40 bar [365/580 psi]	140 l/min [37 US gal/min]

Technical specification

Parameter	Minimum	Recommended range	Maximum
Fluid temperature	-30°C [-22°F]	30 to 60°C [86 to 140°F]	90° [194°F]
Fluid viscosity	4 mm^2/s [39 SUS]	12 to 75 mm^2/s [65 to 347 SUS]	460 mm^2/s [2128 SUS]
Fluid cleanliness	23/19/16 (according to ISO 4406)		
Operating temperature	Ambient: -30 to 60°C [-22 to 140°F]		

PVP Inlet Modules

Theoretical Performance Graphs

Integrated LS pressure relief valve characteristics

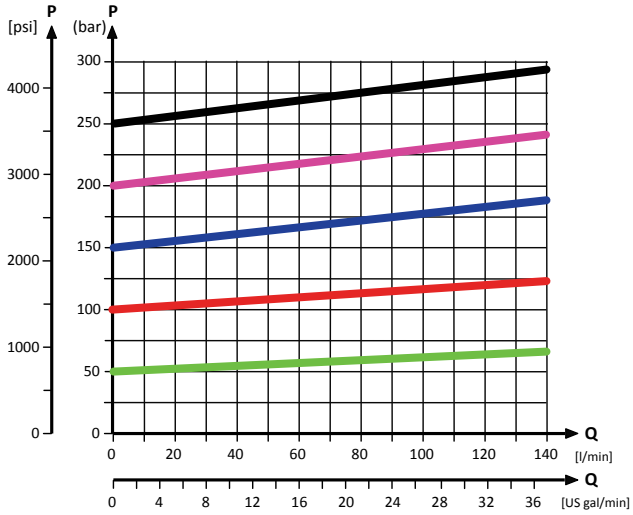

Neutral by-pass pressure drop characteristics

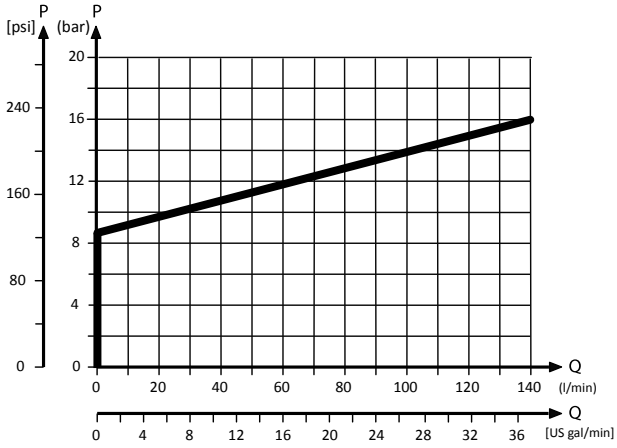

Pilot pressure reduction valve characteristics

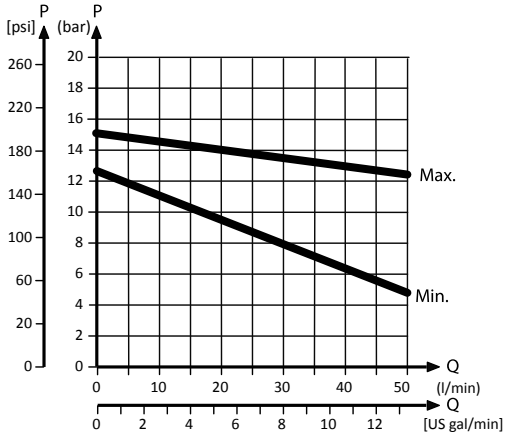

PVP Inlet Modules

Part numbers for Open Center PVP with PPRV

Part number	Actuation	P-port	T-port	LS-port	M-port	Pp-port	T0-port	Mounting	PVPX*
11008849	PVE	G3/4″	G3/4″	G1/4″	G1/4″	-	-	M8	-
11008851	PVH/PVHC	G3/4″	G3/4″	G1/4″	G1/4″	G1/4″	-	M8	-
11066027	PVH/PVHC	G3/4″	G3/4″	G1/4″	G1/4″	-	-	M8	Yes
11072195	PVE	M27x2	M27x2	M14x1.5	M14x1.5	-	M14x1.5	M8	-
157B5010	PVE	G1/2″	G3/4″	G1/4″	G1/4″	-	-	M8	-
157B5012	PVE	G1/2″	G3/4″	G1/4″	G1/4″	-	-	M8	Yes
157B5110	PVE	G3/4″	G3/4″	G1/4″	G1/4″	-	-	M8	-
157B5112	PVE	G3/4″	G3/4″	G1/4″	G1/4″	-	-	M8	Yes
157B5130	PVE	G3/4″	G3/4″	G1/4″	G1/4″	G1/4″	G1/4″	M8	-
157B5132	PVE	G3/4″	G3/4″	G1/4″	G1/4″	G1/4″	-	M8	Yes
157B5180	PVE	G3/4″	G3/4″	G1/4″	G1/4″	G1/4″	-	M8	-
157B5190	PVH/PVHC	G3/4″	G3/4″	G1/4″	G1/4″	G1/4″	-	M8	-
157B5210	PVE	7/8-14 UNF	1 1/16-12 UNF	1/2-20 UNF	1/2-20 UNF	-	-	5/16-18 UNC	-
157B5212	PVE	7/8-14 UNF	1 1/16-12 UNF	1/2-20 UNF	1/2-20 UNF	-	-	5/16-18 UNC	Yes
157B5310	PVE	1 1/16-12 UNF	1 1/16-12 UNF	1/2-20 UNF	1/2-20 UNF	-	-	5/16-18 UNC	-
157B5312	PVE	1 1/16-12 UNF	1 1/16-12 UNF	1/2-20 UNF	1/2-20 UNF	-	-	5/16-18 UNC	Yes
157B5330	PVE	1 1/16-12 UNF	1 1/16-12 UNF	1/2-20 UNF	1/2-20 UNF	1/2-20 UNF	-	5/16-18 UNC	-
157B5332	PVE	1 1/16-12 UNF	1 1/16-12 UNF	1/2-20 UNF	1/2-20 UNF	-	-	5/16-18 UNC	Yes
157B5380	PVE	1 1/16-12 UNF	1 1/16-12 UNF	9/16-18 UNF	9/16-18 UNF	9/16-18 UNF	-	5/16-18 UNC	-
157B5390	PVH/PVHC	1 1/16-12 UNF	1 1/16-12 UNF	9/16-18 UNF	9/16-18 UNF	9/16-18 UNF	-	5/16-18 UNC	-
11101194	PVE	M22x1.5 M16x1.5 (P2)	M22x1.5	M12x1.5	M10x1	-	M16x1.5	M8	-
11008850	PVE	G3/4	G3/4	G1/4	G1/4	-	-	M8	Yes
11013317[1]	PVE	G3/4	G3/4	G1/4	G1/4	G1/4	G1/4	M8	-
11020964	PVE	1 1/16-12 UNF	1 1/16-12 UNF	1/2-20 UNF	1/2-20 UNF	-	-	M8	-
11087590[1]	PVH/PVHC	G3/4	G3/4	G1/4	G1/4	G1/4	-	M8	-
11090453	PVE	JIS 3/4	JIS 3/4	JIS 1/4	JIS 1/4	JIS 1/4	JIS 1/4	M8	-
11119429[2]	PVE	G3/4	G3/4	G1/4	G1/4	G1/4	-	M8	-
11124965	PVH/PVHC	G3/4	G3/4	G1/4	G1/4	G1/4	-	M8	Yes
11124966	PVH/PVHC	G3/4	G3/4	G1/4	G1/4	G1/4	-	M8	-
11130941[2]	PVE	1 1/16-12 UNF	1 1/16-12 UNF	9/16-18 UNF	9/16-18 UNF	9/16-18 UNF	-	5/16-18 UNC	-
11167773	PVH/PVHC	1 1/16-12 UNF	1 1/16-12 UNF	1/2-20 UNF	1/2-20 UNF	-	-	5/16-18 UNC	Yes
11187356	PVE	G1/2	G3/4	G1/4	G1/4	-	-	M8	Yes
11190123	PVH/PVHC	G1/2	G3/4	G1/4	G1/4	-	-	M8	Yes
11196947	PVE	G3/4	G3/4	G1/4	G1/4	-	G1/4	M8	-
11225941	PVE	1 1/16-12 UNF	1 1/16-12 UNF	9/16-18 UNF	9/16-18 UNF	9/16-18 UNF	9/16-18 UNF	5/16-18 UNC	-
157B5135[3]	PVE	G3/4	G3/4	G1/4	G1/4	G1/4	G1/4	M8	-
157B5904[2]	PVE	G3/4	G3/4	G1/4	G1/4	G1/4	-	M8	-
157B5923	PVE	JIS 1/2	JIS 3/4	JIS 1/4	JIS 1/4	-	-	M8	-

PVP Inlet Modules

Part numbers for Open Center PVP with PPRV (continued)

Part number	Actuation	P-port	T-port	LS-port	M-port	Pp-port	T0-port	Mounting	PVPX*
157B5926	PVE	JIS 3/4	JIS 3/4	JIS 1/4	JIS 1/4	-	-	M8	-
157B5934	PVE	G3/4	G3/4	G1/4	G1/4	-	-	M8	-
157B5943[2]	PVH/PVHC	G3/4	G3/4	G1/4	G1/4	G1/4	-	M8	-
157B5953[2]	PVE	G3/4	G3/4	G1/4	G1/4	-	-	M8	Yes
157B5954	PVE	G3/4	G3/4	G1/4	G1/4	G1/4	-	M8	-
157B5960	PVE	1 1/16-12 UNF	1 1/16-12 UNF	9/16-18 UNF	9/16-18 UNF	-	9/16-18 UNF	5/16-18 UNF	-
157B5966	PVE	G3/4	G3/4	G1/4	G1/4	-	-	M8	Yes
157B5976	PVE	G3/4	G3/4	G1/4	G1/4	-	-	M8	Yes
157B5977[1,4]	PVE	G3/4	G3/4	G1/4	G1/4	-	-	M8	-
11101194	PVE	M22 x 1.5	M22 x 1.5	M12 x 1.5	M10 x 1	-	M16 x 1.5	M8	-

* For more information please see the topic *PVPX Electrical LS Pressure Unloading Valve*.

[1] Dampened LS response

[2] Pressure adjustment spool with check valve

[3] Internal T0 connection

[4] Low flow pressure adjustment spool

PVP Inlet Modules

Open center PVP with HPCO and PVE PPRV

The Open Center PVP inlet with integrated High Pressure Carry Over (HPCO) functionality is intended for use with fixed displacement pumps in applications where one pump supply for multiple hydraulic subsystems is desired.

The integrated HPCO functionality guides the excess flow of the PVG 32 valve group to the external hydraulic subsystem(s), giving priority to the PVG 32 work functions.

The Open Center PVP with HPCO and PVE PPRV features:

- Integrated LS pressure relief valve
- Threaded ports for P/T/LS/HPCO and M measuring gauge
- Integrated pilot pressure reducing valve (PPRV) for PVE
- Optional T0 facility and external T0 port
- Optional external pilot pressure port (Pp)
- Optional LS unloading valve, PVPX

Only applicable with PVST end plates with separate T-port due to blocked T-lines for HPCO functionality.

Open Center PVP with HPCO, PVE PPRV schematic

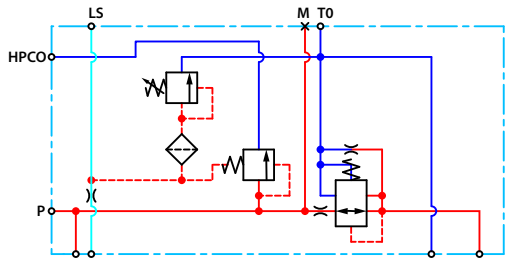

Technical specification for PVP

Max. P-port continuous	Max. P-port intermittent	Max. T-port static/ dynamic	Max. rated flow
350 [5076 psi]	400 bar [5800 psi]	25/40 bar [365/580 psi]	140 l/min [37 US gal/min]

Technical specification

Parameter	Minimum	Recommended range	Maximum
Fluid temperature	-30°C [-22°F]	30 to 60°C [86 to 140°F]	90° [194°F]
Fluid viscosity	4 mm^2/s [39 SUS]	12 to 75 mm^2/s [65 to 347 SUS]	460 mm^2/s [2128 SUS]
Fluid cleanliness	23/19/16 (according to ISO 4406)		
Operating temperature	Ambient: -30 to 60°C [-22 to 140°F]		

PVP Inlet Modules

Theoretical Performance Graphs

Integrated LS pressure relief valve characteristics

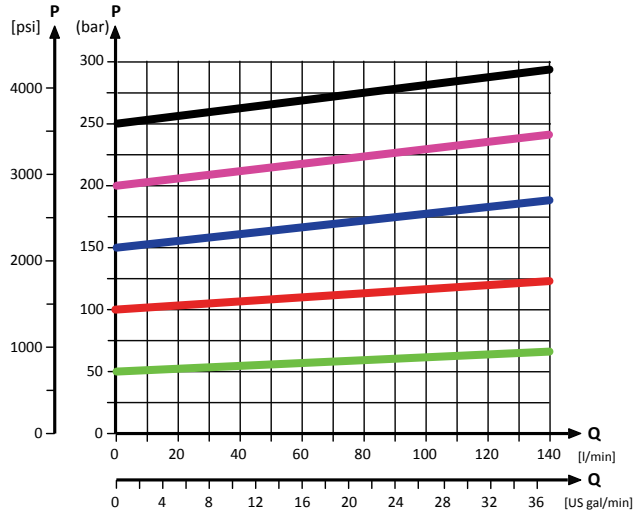

Neutral by-pass pressure drop characteristics

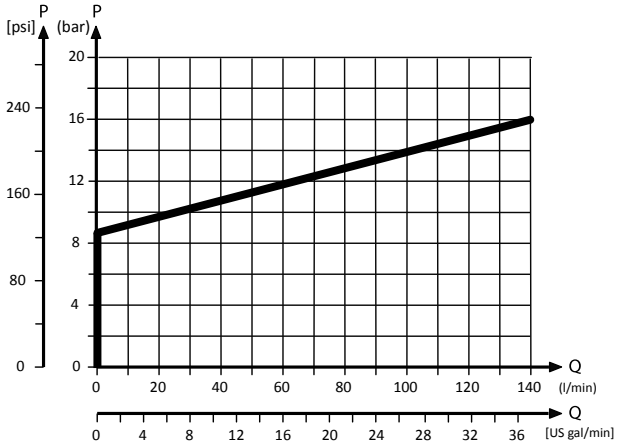

Pilot pressure reduction valve characteristics

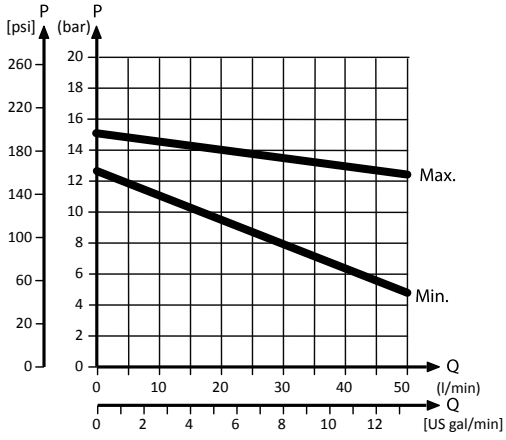

PVP Inlet Modules

Part numbers for OC PVP (HPCO and PPRV)

Part number	P-port	HPCO-port	LS-port	M-port	Pp-port	T0-port	Mounting	PVPX*
157B5140	G3/4″	G3/4"	G1/4″	G1/4″	G1/4″	G1/4″	M8	-
157B5142	G3/4″	G3/4"	G1/4″	G1/4″	G1/4″	–	M8	Yes
157B5340	1 1/16-12 UNF	1 1/16-12 UNF	1/2-20 UNF	1/2-20 UNF	1/2-20 UNF	1/2-20 UNF	5/16-18 UNC	-
157B5342	1 1/16-12 UNF	1 1/16-12 UNF	1/2-20 UNF	1/2-20 UNF	1/2-20 UNF	–	5/16-18 UNC	Yes
157B5961	M27x2	M27x2	M14x1.5	M14x1.5	–	M14x1.5	M8	–
11101195	M22x1.5 M16x1.5 (P2)	M22x1.5	M12x1.5	M10x1	–	M16x1.5	M8	–

* For more information please see the topic *PVPX Electrical LS Pressure Unloading Valve*.

PVP Inlet Modules

Closed Center PVP

The basic Closed Center PVP inlet is intended for use with variable displacement pumps in applications where a valve group with mechanically controlled work sections is desired, or where the pilot pressure to the valve group is supplied externally.

The Closed Center PVP features:

- Integrated LS pressure relief valve
- Threaded ports for P/T/LS and M measuring gauge
- Optional LS unloading valve, PVPX
- Optional T0 facility and external T0 port

Closed center PVP schematic

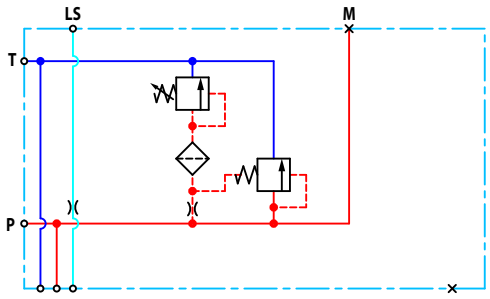

Technical specification for PVP

Max. P-port continuous	Max. P-port intermittent	Max. T-port static/ dynamic	Max. rated flow
350 [5076 psi]	400 bar [5800 psi]	25/40 bar [365/580 psi]	140 l/min [37 US gal/min]

Technical specification

Parameter	Minimum	Recommended range	Maximum
Fluid temperature	-30°C [-22°F]	30 to 60°C [86 to 140°F]	90° [194°F]
Fluid viscosity	4 mm^2/s [39 SUS]	12 to 75 mm^2/s [65 to 347 SUS]	460 mm^2/s [2128 SUS]
Fluid cleanliness	23/19/16 (according to ISO 4406)		
Operating temperature	Ambient: -30 to 60°C [-22 to 140°F]		

PVP Inlet Modules

Theoretical Performance Graphs

Integrated LS pressure relief valve characteristics

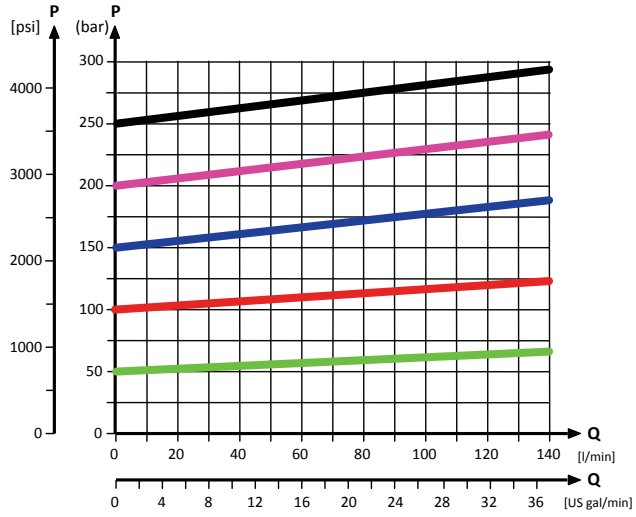

Part numbers for Closed Center PVP

Part number	P-port	T-port	LS-port (LS1**)	M-port	T0-port	Mounting	PVPX*
11030683	G3/4	G3/4	G1/4 (G1/4)	G1/4	G1/4	M8	-
157B5001	G1/2	G3/4	G1/4	G1/4	-	M8	-
157B5101	G3/4	G3/4	G1/4	G1/4	-	M8	-
157B5103	G3/4	G3/4	G1/4	G1/4	-	M8	Yes
157B5201	7/8-14 UNF	1 1/16-12 UNF	1/2-20 UNF	1/2-20 UNF	--	5/16-18 UNC	-
157B5301	1 1/16-12 UNF	1 1/16-12 UNF	1/2-20 UNF	1/2-20 UNF	-	5/16-18 UNC	-
15B5907	1 1/16-12 UNF	1 1/16-12 UNF	1/2-20 UNF	1/2-20 UNF	-	M8	-
157B5922	JIS 1/2	JIS 3/4	JIS 1/4	JIS 1/4	-	M8	-
157B5927	JIS 3/4	JIS 3/4	JIS 1/4	JIS 1/4	-	M8	-
157B5946	G1/2	G3/4	G1/4 (G1/8)	G1/4	-	M8	-

** LS1 is an extra LS-port

* For more information see *PVPX Electrical LS Pressure Unloading Valve* on page 35

PVP Inlet Modules

Closed Center PVP with PPRV

The Closed Center PVP inlet with integrated pilot pressure reduction valve (PPRV) is intended for use with variable displacement pumps in applications where a valve group with electro-hydraulic or hydraulically controlled work sections is desired.

The Closed Center PVP with PPRV features:

- Integrated LS pressure relief valve
- Threaded ports for P/T/LS and M measuring gauge
- Integrated pilot pressure reducing valve (PPRV) for PVE or PVH/PVHC
- Optional T0 facility and external T0 port
- Optional LS unloading valve, PVPX

Closed center PVP with PPRV schematic

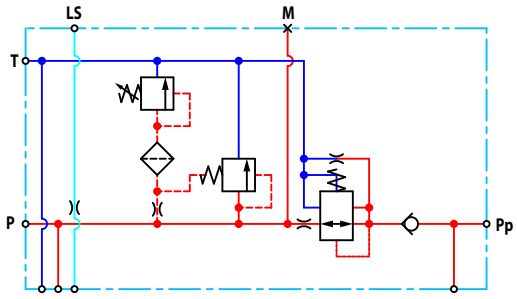

Technical specification for PVP

Max. P-port continuous	Max. P-port intermittent	Max. T-port static/ dynamic	Max. rated flow
350 [5076 psi]	400 bar [5800 psi]	25/40 bar [365/580 psi]	140 l/min [37 US gal/min]

Technical specification

Parameter	Minimum	Recommended range	Maximum
Fluid temperature	-30°C [-22°F]	30 to 60°C [86 to 140°F]	90° [194°F]
Fluid viscosity	4 mm^2/s [39 SUS]	12 to 75 mm^2/s [65 to 347 SUS]	460 mm^2/s [2128 SUS]
Fluid cleanliness	23/19/16 (according to ISO 4406)		
Operating temperature	Ambient: -30 to 60°C [-22 to 140°F]		

PVP Inlet Modules

Theoretical Performance Graphs

Integrated LS pressure relief valve characteristics

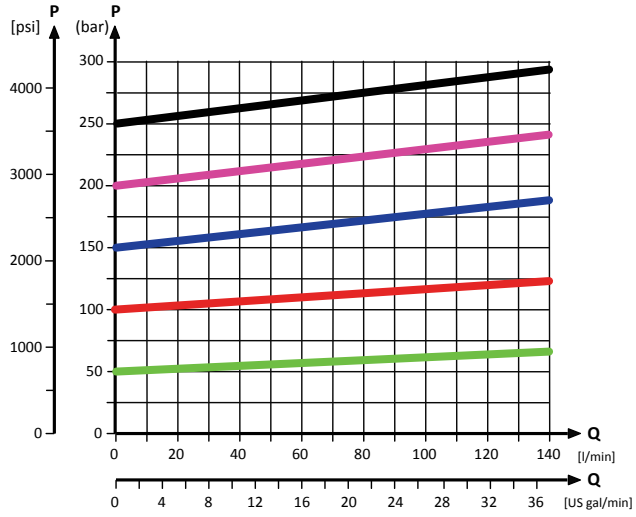

Pilot pressure reduction valve characteristics

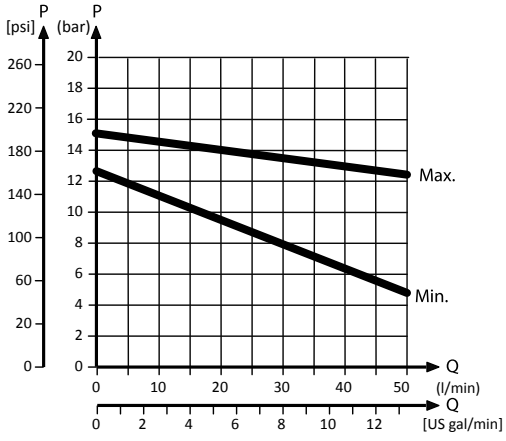

Part numbers for Closed Center PVP with PPRV

Part number	Actuation	P-port	T-port	LS-port (LS1**	M-port	Pp-port	T0-port	Mounting	PVPX*
11051802	PVH/PVHC	1 1/16-12 UNF	1 1/16-12 UNF	1/2-20 UNF	1/2-20 UNF	1/2-20 UNF	1/2-20 UNF	5/16-18 UNC	-
157B5011	PVE	G1/2″	G3/4″	G1/4″	G1/4″	-	-	M8	-
157B5013	PVE	G1/2″	G3/4″	G1/4″	G1/4″	-	-	M8	Yes
157B5111	PVE	G3/4″	G3/4″	G1/4″	G1/4″	-	-	M8	-
157B5113	PVE	G3/4″	G3/4″	G1/4″	G1/4″	-	-	M8	Yes
157B5131	PVE	G3/4″	G3/4″	G1/4″	G1/4″	G1/4″	G1/4″	M8	-
157B5133	PVE	G3/4″	G3/4″	G1/4″	G1/4″	G1/4″	-	M8	Yes
157B5181	PVE	G3/4″	G3/4″	G1/4″	G1/4″	G1/4″	-	M8	-
157B5191	PVH/PVHC	G3/4″	G3/4″	G1/4″	G1/4″	G1/4″	-	M8	-
157B5211	PVE	7/8-14 UNF	1 1/16-12 UNF	1/2-20 UNF	1/2-20 UNF	-	-	5/16-18 UNC	-

PVP Inlet Modules

Part numbers for Closed Center PVP with PPRV (continued)

Part number	Actuation	P-port	T-port	LS-port (LS1**	M-port	Pp-port	T0-port	Mounting	PVPX*
157B5213	PVE	7/8-14 UNF	1 1/16-12 UNF	1/2-20 UNF	1/2-20 UNF	-	-	5/16-18 UNC	Yes
157B5311	PVE	1 1/16-12 UNF	1 1/16-12 UNF	1/2-20 UNF	1/2-20 UNF	-	-	5/16-18 UNC	-
157B5313	PVE	1 1/16-12 UNF	1 1/16-12 UNF	1/2-20 UNF	1/2-20 UNF	-	-	5/16-18 UNC	Yes
157B5331	PVE	1 1/16-12 UNF	1 1/16-12 UNF	1/2-20 UNF	1/2-20 UNF	1/2-20 UNF	1/2-20 UNF	5/16-18 UNC	-
157B5333	PVE	1 1/16-12 UNF	1 1/16-12 UNF	1/2-20 UNF	1/2-20 UNF	1/2-20 UNF	1/2-20 UNF	5/16-18 UNC	Yes
157B5381	PVE	1 1/16-12 UNF	1 1/16-12 UNF	9/16-18 UNF	9/16-18 UNF	9/16-18 UNF	-	5/16-18 UNC	-
157B5391	PVH/PVHC	1 1/16-12 UNF	1 1/16-12 UNF	9/16-18 UNF	9/16-18 UNF	9/16-18 UNF	-	5/16-18 UNC	

** LS1 is an extra LS-port

* For more information please see *PVPX Electrical LS Pressure Unloading Valve* on page 35

All modules can be manually activated with the PVM actuation.

PVP Inlet Modules

Closed center PVPV with PPRV

The Closed Center PVPV inlet with integrated pilot pressure reduction valve (PPRV) is intended for use with variable displacement pumps in applications where a valve group with electro-hydraulic or hydraulically controlled work sections is desired.

The Closed Center PVPV with PPRV features:

- Optional shock/anti-cavitation valve facility (PVLP)
- Threaded ports for P/T/LS and M measuring gauge
- Integrated pilot pressure reducing valve (PPRV) for PVE or PVH/PVHC

Hydraulic schematic

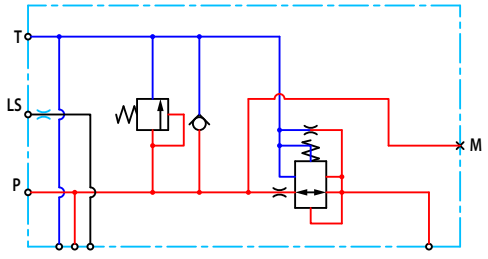

Technical specification for PVP

Max. P-port continuous	Max. P-port intermittent	Max. T-port static/ dynamic	Max. rated flow
350 [5076 psi]	400 bar [5800 psi]	25/40 bar [365/580 psi]	140 l/min [37 US gal/min]

Technical specification

Parameter	Minimum	Recommended range	Maximum
Fluid temperature	-30°C [-22°F]	30 to 60°C [86 to 140°F]	90° [194°F]
Fluid viscosity	4 mm^2/s [39 SUS]	12 to 75 mm^2/s [65 to 347 SUS]	460 mm^2/s [2128 SUS]
Fluid cleanliness	23/19/16 (according to ISO 4406)		
Operating temperature	Ambient: -30 to 60°C [-22 to 140°F]		

Pilot pressure reduction valve characteristics

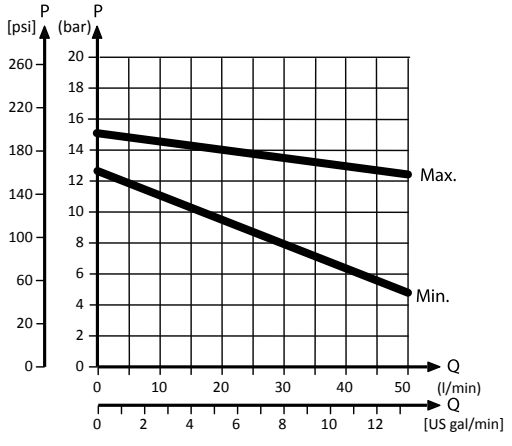

PVP Inlet Modules

Part numbers for Closed Center PVPV with PPRV

Part number	Actuation	P-, T-port	LS-, M-port	Mounting	TO-port	PVPX*
11008856	PVH/PVHC	G1″	G1/4″	M8	–	Yes
11051803		1 5/16-12 UN	9/16-18 UNF	5/16-18 UNC	–	Yes
11003806	PVE	M27x2 M14x1.5 (P2)	M14x1.5	M8	M14x1.5	–
157B5911		1 5/16-12 UN	9/16-18 UNF	5/16-18 UNC	–	–
157B5913					–	Yes
157B5938		G1″	G1/4″	M8	–	–
157B5941					–	Yes
157B5969		M33x2 M14x1.5 (T2)	M14x1.5		M16x1.5	Yes

* For more information please see the topic *PVPX Electrical LS Pressure Unloading Valve*.

All modules can be manually activated with the PVM actuation.

PVP Inlet Modules

Closed center PVPVM with PPRV

The Closed Center PVPVM mid-inlet module with integrated pilot pressure reduction valve (PPRV) is intended for use with variable displacement pumps in applications where a valve group with electro-hydraulic or hydraulically controlled work sections is desired.

Using a PVPVM module in a valve group requires a 180° degree rotation of the PVG 32 work sections on one side.

The Closed Center PVPVM with PPRV features:

- Optional shock/anti-cavitation valve facility (PVLP)
- Threaded ports for P/T/LS and M measuring gauge
- Integrated pilot pressure reducing valve (PPRV) for PVE or PVH/PVHC

Hydraulic schematic

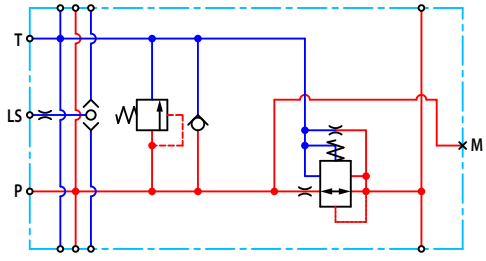

Technical specification for PVP

Max. P-port continuous	Max. P-port intermittent	Max. T-port static/ dynamic	Max. rated flow
350 [5076 psi]	400 bar [5800 psi]	25/40 bar [365/580 psi]	140 l/min [37 US gal/min]

Technical specification

Parameter	Minimum	Recommended range	Maximum
Fluid temperature	-30°C [-22°F]	30 to 60°C [86 to 140°F]	90° [194°F]
Fluid viscosity	4 mm^2/s [39 SUS]	12 to 75 mm^2/s [65 to 347 SUS]	460 mm^2/s [2128 SUS]
Fluid cleanliness	23/19/16 (according to ISO 4406)		
Operating temperature	Ambient: -30 to 60°C [-22 to 140°F]		

Pilot pressure reduction valve characteristics

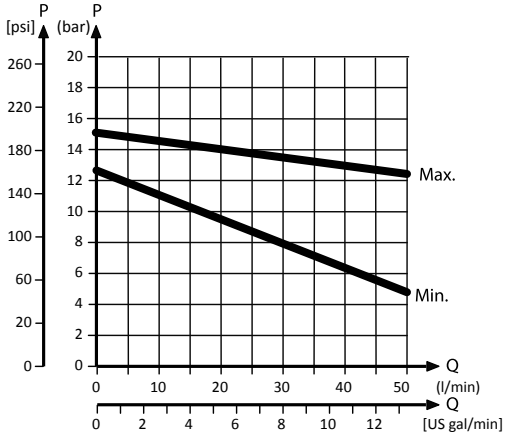

PVP Inlet Modules

Part numbers for Closed Center PVPVM with PPRV

Part number	Actuation	P-, T-port	LS-, M-port	Mounting	PVLP
11083156	PVH/PVHC	1 5/16-12 UN	9/16-18 UNF	5/16-18 UNC	Yes
157B5912	PVE				-
157B5914					Yes
157B5937		G1″	G1/4″	M8	-
157B5940					Yes

All modules can be manually activated with the PVM actuation.

PVP Inlet Modules

Open/Closed center PVP with PPRV

The Open Center/Closed Center PVP with integrated pilot pressure reduction valve (PPRV) is intended for use with fixed or variable displacement pumps in applications where the application manufacturer does not determine the pump type.

The modules allow an easy switch between Open Center and Closed Center configuration by means of an external hexagon selector key. Variants also feature an LS boost functionality, increasing the LS pressure to the pump LS regulator with a constant 6 bar, compensating for potential LS bleed-off and leakage.

The Open/closed center PVPV with PPRV features:

- Integrated OC/CC selector
- Integrated LS pressure relief valve
- Threaded ports for P/T/LS and M measuring gauge
- Integrated pilot pressure reducing valve (PPRV) for PVE or PVH/PVHC
- Optional LS boost functionality

Hydraulic schematic

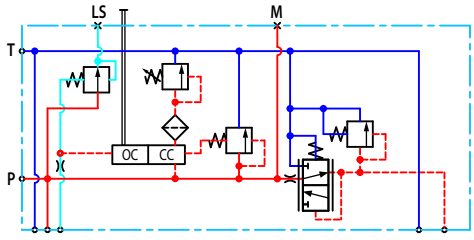

Technical specification for PVP

Max. P-port continuous	Max. P-port intermittent	Max. T-port static/ dynamic	Max. rated flow
350 [5076 psi]	400 bar [5800 psi]	25/40 bar [365/580 psi]	140 l/min [37 US gal/min]

Technical specification

Parameter	Minimum	Recommended range	Maximum
Fluid temperature	-30°C [-22°F]	30 to 60°C [86 to 140°F]	90° [194°F]
Fluid viscosity	4 mm^2/s [39 SUS]	12 to 75 mm^2/s [65 to 347 SUS]	460 mm^2/s [2128 SUS]
Fluid cleanliness	23/19/16 (according to ISO 4406)		
Operating temperature	Ambient: -30 to 60°C [-22 to 140°F]		

PVP Inlet Modules

Theoretical Performance Graphs

Integrated LS pressure relief valve characteristics

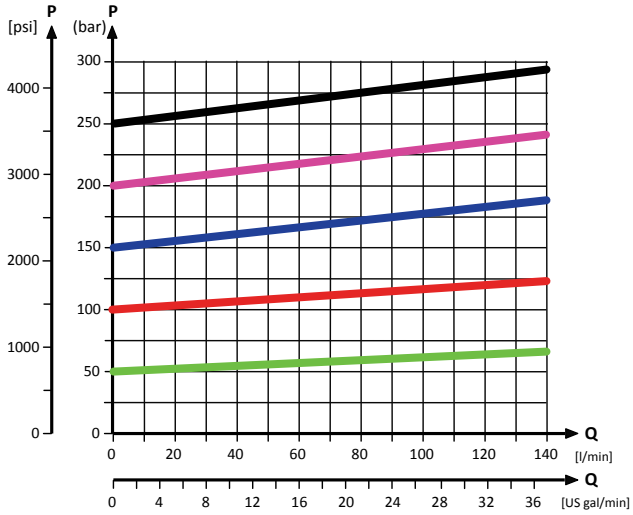

Neutral by-pass pressure drop characteristics

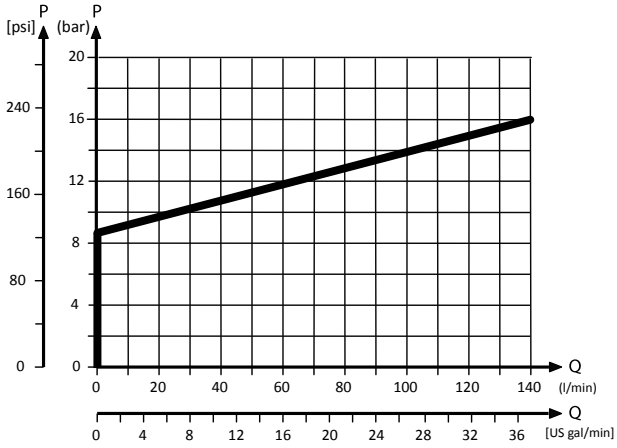

Pilot pressure reduction valve characteristics

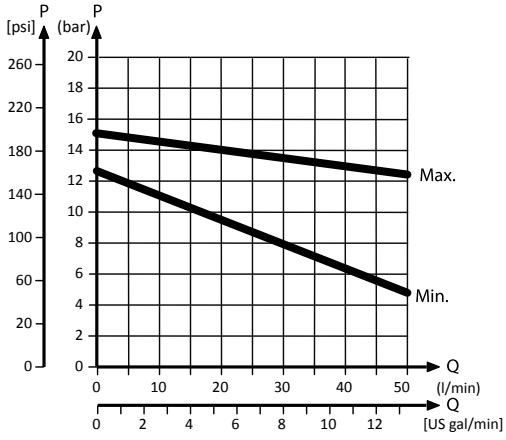

PVP Inlet Modules

Part numbers for Open/Closed Center PVP with PPRV

Part number	Actuation	P-port	T-port	LS-port (LS1**)	M-port	T0-port	Mounting	LS Boost
11093273	PVE	G3/4	G3/4	-	G1/4	-	M8	Yes
11119094	PVE	G3/4	G3/4	-	G1/4	-	M8	-
11119095	PVE	1 1/16-12 UNF	1 1/16-12 UNF	1/2-20 UNF	1/2-20 UNF	-	M8	-
11131344	PVH/PVHC	G3/4	G3/4	-	G1/4	-	M8	Yes
11168608[1]	PVE	G3/4	G3/4	-	G1/4	-	M8	Yes

** LS1 is an extra LS-port

[1] Dampened LS response

All modules can be manually activated with the PVM actuation.

PVP Inlet Modules

Open/Closed center PVPM

The Open Center/Closed Center PVPM mid-inlet acts as a simple manifold and is intended for use with fixed or variable displacement pumps. The PVPM features no logic other than a PVLP shock/anti-cavitation valve facility for pressure peak protection and anti-cavitation prevention.

The PVPM module must be configured together with an Open Center PVP module for **fixed displacement pumps** and for **variable displacement pumps** can be configured together with a PVSI start plate or a Closed Center PVP/PVPV module.

The Open center/closed center PVPM features:

- Integrated shock/anti-cavitation valve facility (PVLP)
- Threaded ports for P/T
- Pilot pressure and T0 lines through module

Hydraulic schematic

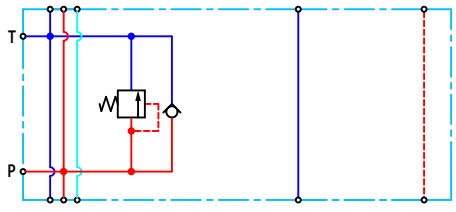

Technical specification for PVP

Max. P-port continuous	Max. P-port intermittent	Max. T-port static/ dynamic	Max. rated flow
350 [5076 psi]	400 bar [5800 psi]	25/40 bar [365/580 psi]	140 l/min [37 US gal/min]

Technical specification

Parameter	Minimum	Recommended range	Maximum
Fluid temperature	-30°C [-22°F]	30 to 60°C [86 to 140°F]	90° [194°F]
Fluid viscosity	4 mm^2/s [39 SUS]	12 to 75 mm^2/s [65 to 347 SUS]	460 mm^2/s [2128 SUS]
Fluid cleanliness	23/19/16 (according to ISO 4406)		
Operating temperature	Ambient: -30 to 60°C [-22 to 140°F]		

Part numbers for Open Center/Closed Center PVPM

Part number	P-, T-port	Mounting	PVLP
11093682	1 5/16-12 UN	5/16-18 UNC	Yes
11093684	G1″	M8	Yes

PVP Inlet Module Accessories

The generic PVP inlet module accessory platform includes the PVPX Electrical LS pressure unloading valve, External pilot pressure adapters PVPC with or without check valve for all Open Center PVP with PPRV.

- *PVPX Electrical LS Pressure Unloading Valve* on page 35
- *PVPC without Check Valve* on page 38
- *PVPC with Check Valve* on page 39

PVPX Electrical LS Pressure Unloading Valve

The electrical LS pressure unloading valve is an accessory available for PVP inlet modules with PVPX facility. The PVPX consist of a solenoid valve and a magnetic coil package, allowing the operator to relieve the LS pressure to tank electrically.

Configuration variants also feature a Manual Override functionality to activate the PVPX manually:

- Normally Open (NO),
- Normally Open with Manual Override (NOMO)

There are two types of NOMO-configurations - PUSH, and PUSH & TURN. With the TURN function you can keep the override function until you unlock it again.

- Normally Closed (NC)

Configuration variants

Normally Open (NO)	Normally Open with MOR (NOMO)	Normally Closed (NC)
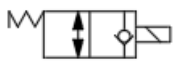	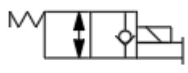	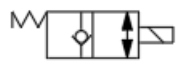

Relieving the LS pressure to tank results in a reduced system pressure level, which is determined by:

- the sum of the tank and neutral by-pass pressure drop in a **Open Center** PVP configuration
- the sum of the tank and standby-pressure in a **Closed Center** PVP configuration

PVPX with NOMO schematic

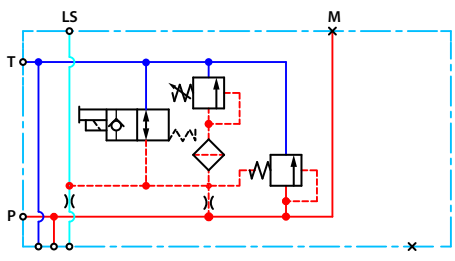

PVPX technical data

Voltage supply	12/24 V_{DC} ± 10%
Resistance @ 12 V_{DC}	7.2 Ω ± 7%
Resistance @ 24 V_{DC}	28.2 Ω ± 7%
Power consumption	20 W
Maximum LS response time	300 ms
Max. pressure drop @ 0.1 l/min [2.6 US gal/min]	2 bar [30 psi]

PVP Inlet Module Accessories

PVPX technical data (continued)

Max. coil surface temperature	155°C [311°F]
Thread size	3/4-16 UNF

Technical specification

Parameter	Minimum	Recommended range	Maximum
Fluid temperature	-30°C [-22°F]	30 to 60°C [86 to 140°F]	90° [194°F]
Fluid viscosity	4 mm^2/s [39 SUS]	12 to 75 mm^2/s [65 to 347 SUS]	460 mm^2/s [2128 SUS]
Fluid cleanliness	23/19/16 (according to ISO 4406)		
Operating temperature	Ambient: -30 to 60°C [-22 to 140°F]		

Part numbers for PVPX

Part numbers for PVPX, NO and NC configuration

Part number	Configuration	Voltage Supply	Connector	IP Rating
157B4236	NO	12 V_{DC}	1x2 DIN	IP 65
157B4238	NO	24 V_{DC}		
157B4246	NC	12 V_{DC}		
157B4248	NC	24 V_{DC}		
157B4976	NC	26 V_{DC}		
157B4981	NO	12 V_{DC}	1x2 AMP	IP 66
157B4982	NO	24 V_{DC}		
157B4983	NC	12 V_{DC}		
157B4984	NC	24 V_{DC}		
11180766	NO	12 V_{DC}	1x2 DEUTSCH	IP 67
11180767	NO	24 V_{DC}		
11180768	NC	12 V_{DC}		
11180769	NC	24 V_{DC}		
11225108	NO	26 V_{DC}		
11225109	NC	26 V_{DC}		

Part numbers for PVPX, NOMO configuration

Part number	Manual Override	Voltage Supply	Connector	IP Rating
157B4256	PUSH	12 V_{DC}	1x2 DIN	IP 65
157B4257	PUSH & TURN	12 V_{DC}		
157B4258	PUSH	24 V_{DC}		
157B4259	PUSH & TURN	24 V_{DC}		
157B4260	PUSH	26 V_{DC}		
157B4985	PUSH	12 V_{DC}	1x2 AMP	IP 66
157B4986	PUSH	24 V_{DC}		

PVP Inlet Module Accessories

Part numbers for PVPX, NOMO configuration (continued)

Part number	Manual Override	Voltage Supply	Connector	IP Rating
11193839	PUSH	12 V_{DC}	1x2 DEUTSCH	IP 67
11193836	PUSH	24 V_{DC}		
11225111	PUSH	26 V_{DC}		
11225110	PUSH & TURN			

PVP Inlet Module Accessories

PVPC without Check Valve

The PVPC external pilot pressure adapter without check valve is an accessory in the M-port available for PVP inlet modules with integrated pilot pressure reduction valve (PPRV).

The PVPC without check valve cuts off the integrated PPRV to the PVE or PVH/PVHC in the valve group and enables an external pilot pressure supply through the PVPC adapter.

PVPC without Check Valve

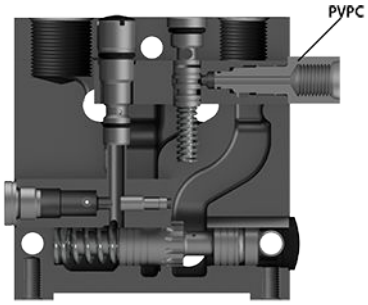

PVP with PVPC without check valve schematic

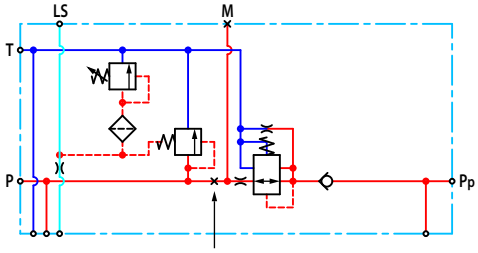

One application example for the PVPC without check valve is where it is a wanted feature to supply the valve group with oil from a manually operated emergency pump without directing oil flow to the PPRV.

When the main pump is running in its normal operation mode, the oil is directed through the PVPC adapter via the PPRV to the PVE electrical actuators.

When the main pump flow fails, the external shuttle valve ensures that the oil flow from the manually operated emergency pump is used to pilot open the over-center valve and lower the load. The load is only possible to lower when using the mechanical operating lever of the PVG 32 valve group.

Part numbers for Open Center/Closed Center PVPM

Part number	157B5400	158X1000
Thread	G1/2"	1/2-20 UNF

PVP Inlet Module Accessories

PVPC with Check Valve

The PVPC external pilot pressure adapter with check valve is an accessory in the M-port available for PVP inlet modules with integrated pilot pressure reduction valve (PPRV).

The PVPC with check valve enables an external pilot pressure supply through the PVPC adapter and the PPRV, while also allowing the main pump to supply the PPRV through the P-gallery as a standard Open Center PVP with PPRV.

PVPC with Check Valve

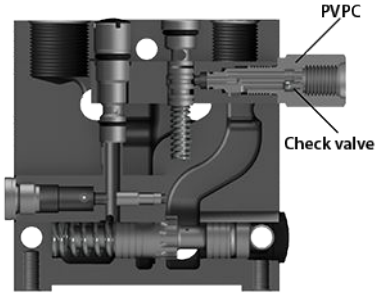

PVP with PVPC with check valve schematic

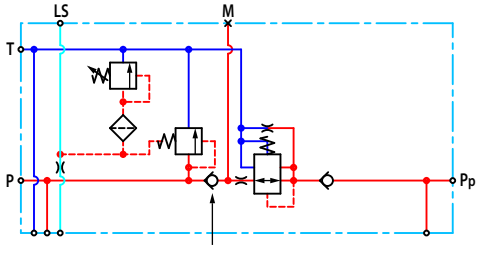

One application example for the PVPC with check valve is where it is a wanted feature to operate the valve group by means of the PVE electrical actuators without pump flow.

When the external solenoid valve is opened, oil from the pressure side of the cylinder is fed via the PVPC through the PPRV to act as the pilot supply for the PVE electrical actuators. This means that it is possible to lower a load by means of the PVE electrical actuators without starting the pump.

The built-in check valve prevents the oil from flowing via the pressure adjustment spool to tank. With the pump functioning normally the external solenoid valve is closed to ensure that the load is not lowered due to the pilot supply oil flow requirement of approximately 1 l/min [0.25 US gal/min].

With a Closed Center PVP the external pilot oil supply can be connected to the pressure gauge connection without the use of a PVPC plug.

Part numbers for Open Center/Closed Center PVPM

Part number	157B5600	157B5700
Thread	G1/2"	1/2-20 UNF

PVB Basic Modules

The PVG 32 PVB basic modules, also referred to as work sections, are the interface between the PVG 32 proportional valve group and the work function such as a cylinder or a motor.

PVB Basic Module

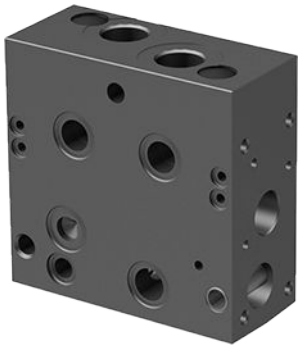

PVB 32 dimensions

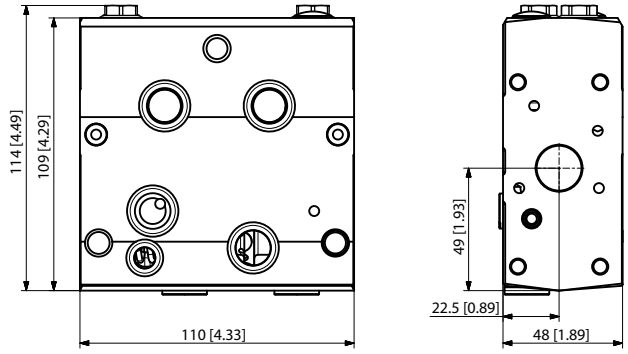

Weight: 3.05 kg [6.73 lb]

Uncompensated PVB schematic symbol

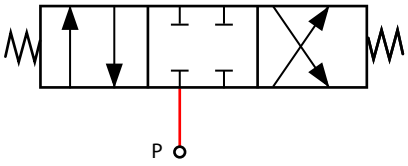

Compensated PVB schematic symbol

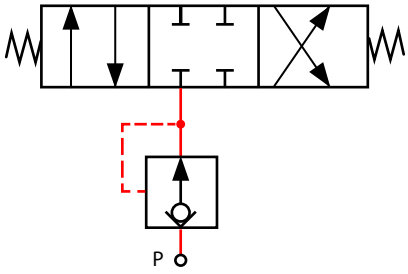

The PVB basic module variants are based on a generic platform with a selection of additional features, enabling you to tailor the PVB to suit the demands of any hydraulic system. The generic PVB basic module platform includes the following main variants:

- *Uncompensated PVB* on page 41
- *Uncompensated PVB with load drop check valve* on page 44
- *Uncompensated PVBZ with POC* on page 47
- *Compensated PVB* on page 48
- *Dampened Compensated PVB* on page 51
- *Dampened compensated PVB with LS A/B* on page 54
- *Compensated PVB with LS A/B* on page 57
- *Compensated high flow PVB* on page 61
- *Compensated high flow PVB with LS A/B* on page 64
- *Compensated PVBZ with POC* on page 68
- *Compensated high flow PVBZ with POC* on page 70
- *Compensated high flow PVBZ with POC and manifold interface* on page 73

PVB Basic Modules

Uncompensated PVB

The uncompensated PVB is intended for controlling a work function where the function behavior in terms of flow and pressures requires independence on the load pressure of other functions used simultaneously.

The Uncompensated PVB features:

- Integrated LS shuttle network
- Optional shock/anti-cavitation valve facility (PVLP)
- Optional $LS_{A/B}$ shuttle valve facility for float spool use
- Optional T0 facility

Schematic

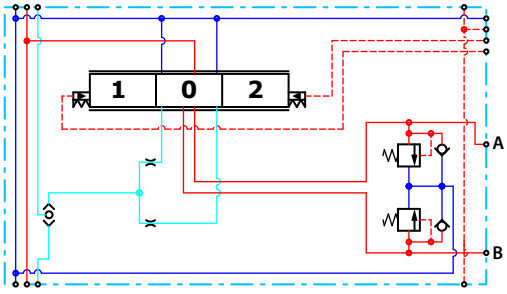

Technical specification for A/B-port

Max. continuous pressure	Max. intermittent pressure	Max. rated flow
350 bar [5076 psi]*	420 bar [6090 psi]**	125 l/min [33 US gal/min]

* With PVSI end plate. With PVS end plate max. 300 [4351 psi]

** Intermittent pressure at max. 250,000 cycles of full PVG life time cycles, with PVSI end plate. The maximum intermittent pressure at max. 250,000 cycles stresses the need to confirm application duty cycle before proceeding with specification. For further information contact Danfoss Product Application Engineering.

Technical specification

Parameter	Minimum	Recommended range	Maximum
Fluid temperature	-30°C [-22°F]	30 to 60°C [86 to 140°F]	90° [194°F]
Fluid viscosity	4 mm^2/s [39 SUS]	12 to 75 mm^2/s [65 to 347 SUS]	460 mm^2/s [2128 SUS]
Fluid cleanliness	23/19/16 (according to ISO 4406)		
Operating temperature	Ambient: -30 to 60°C [-22 to 140°F]		

PVB Basic Modules

Performance graphs (Theoretical)

PVLP shock valve characteristics

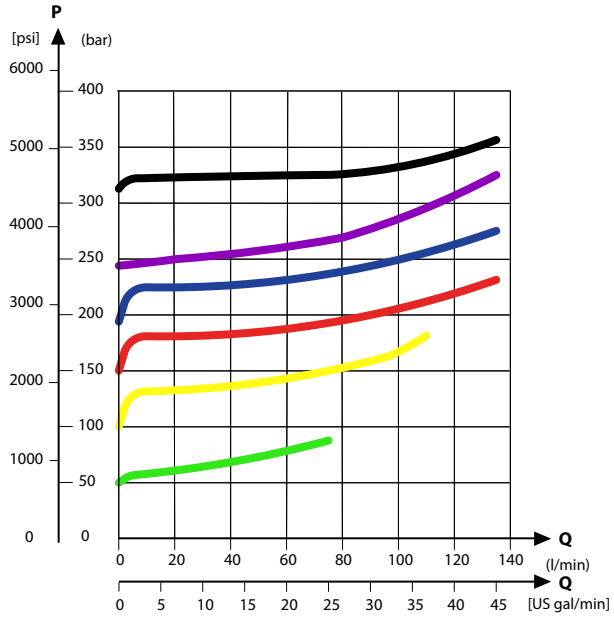

PVLP/PVLA suction valve characteristics

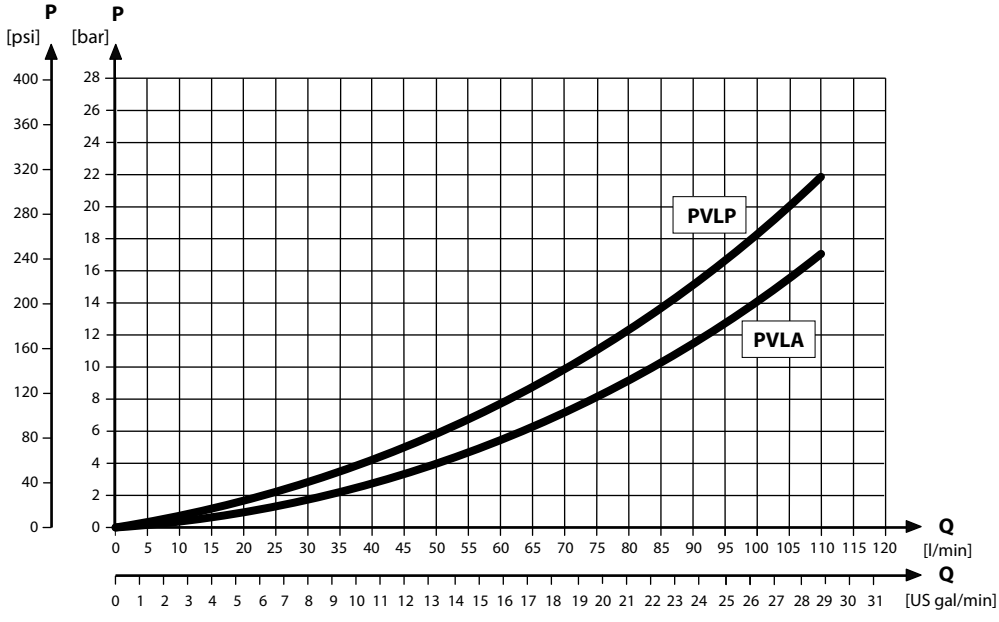

Part numbers for uncompensated PVB

Part number	A/B-port	PVLP/PVLA	LS A/B shuttle	T0 facility
157B6000	G1/2"	—	—	—
157B6010		—	—	Yes
157B6030		Yes	—	—
11071832		Yes	Yes	—

PVB Basic Modules

Part numbers for uncompensated PVB (continued)

Part number	A/B-port	PVLP/PVLA	LS A/B shuttle	T0 facility
157B6400	7/8–14 UNF	—	—	—
157B6410		—	—	Yes
157B6430		Yes	—	—

PVB Basic Modules

Uncompensated PVB with load drop check valve

The uncompensated PVB is intended for controlling a work function where the function behavior in terms of flow and pressures allows dependency on the load pressure of other functions used simultaneously. The integrated load drop check valve prevents flow back from work ports influencing other functions.

The Uncompensated PVB with load drop check valve features:

- Integrated LS shuttle network
- Load drop check valve
- Optional shock/anti-cavitation valve facility (PVLP)
- Optional $LS_{A/B}$ shuttle valve facility for float spool use
- Optional T0 facility

Schematic

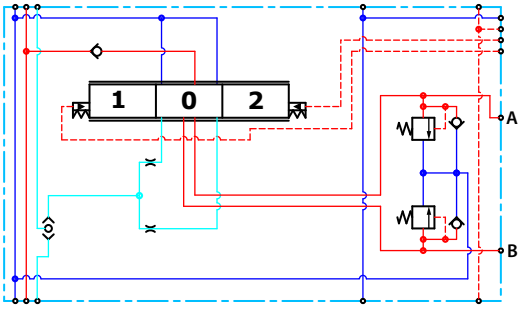

Technical specification for A/B-port

Max. continuous pressure	Max. intermittent pressure	Max. rated flow
350 bar [5076 psi]	420 bar [6090 psi]	125 l/min [33 US gal/min]

Technical specification

Parameter	Minimum	Recommended range	Maximum
Fluid temperature	-30°C [-22°F]	30 to 60°C [86 to 140°F]	90° [194°F]
Fluid viscosity	4 mm^2/s [39 SUS]	12 to 75 mm^2/s [65 to 347 SUS]	460 mm^2/s [2128 SUS]
Fluid cleanliness	23/19/16 (according to ISO 4406)		
Operating temperature	Ambient: -30 to 60°C [-22 to 140°F]		

PVB Basic Modules

Performance graphs (Theoretical)

PVLP shock valve characteristics

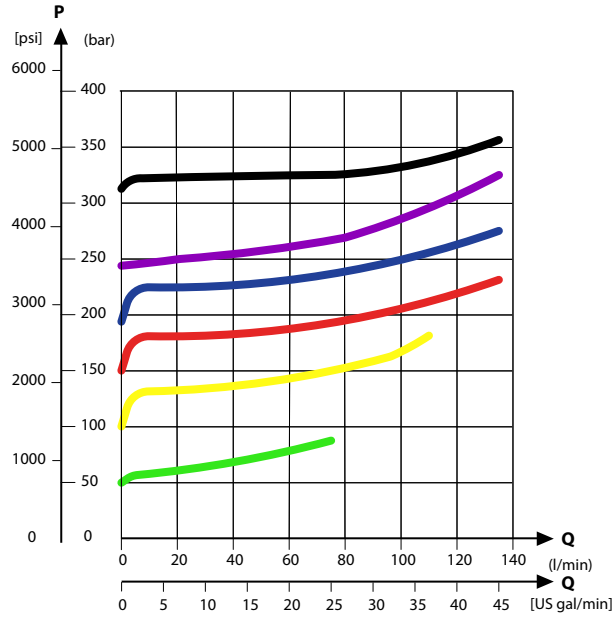

PVLP/PVLA suction valve characteristics

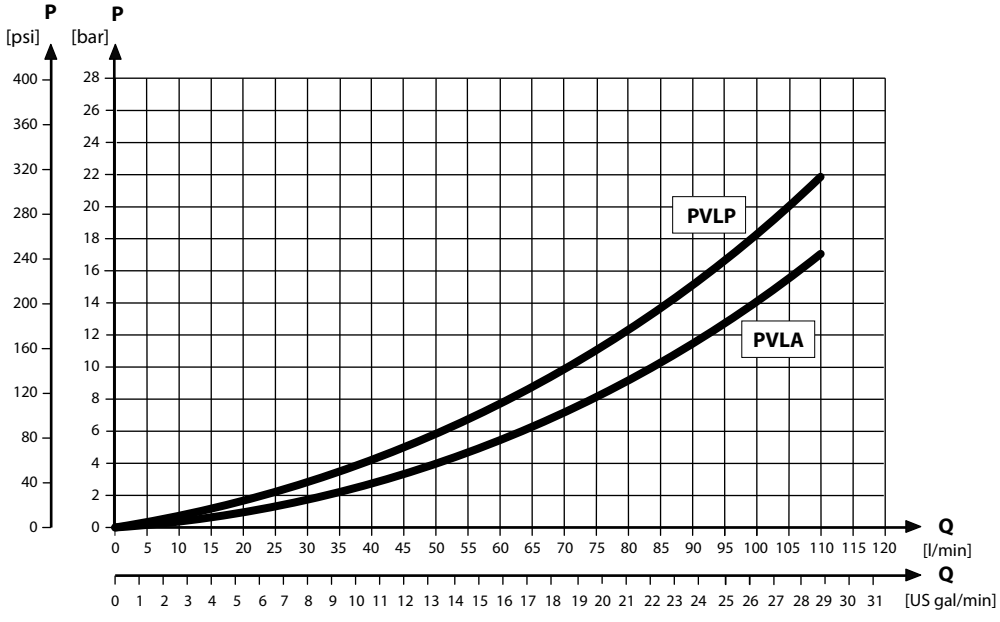

Part numbers for Uncomp. PVB with load drop check valve

Part number	A/B-port	PVLP/PVLA	LS A/B shuttle	T0 facility
157B6100	G1/2"	—	—	—
157B6500	7/8–14 UNF	—	—	—
157B6110	G1/2"	—	—	Yes
157B6909	7/8–14 UNF	—	—	Yes

PVB Basic Modules

Part numbers for Uncomp. PVB with load drop check valve (continued)

Part number	A/B-port	PVLP/PVLA	LS A/B shuttle	T0 facility
157B6130	G1/2"	Yes	—	—
157B6530	7/8–14 UNF	Yes	—	—
157B6140	G1/2"	Yes	—	Yes
157B6904	7/8–14 UNF	Yes	—	Yes
157B6136	G1/2"	Yes	Yes	—
157B6536	7/8–14 UNF	Yes	Yes	—

PVB Basic Modules

Uncompensated PVBZ with POC

The uncompensated PVBZ is intended for controlling a work function where the function behavior in terms of flow and pressures allows dependency on the load pressure of other functions used simultaneously.

The Pilot Operated Check valve giving very low leakage will prevent cylinder creep.

The Uncompensated PVBZ with POC features:

- Integrated LS shuttle network
- Integrated POC
- Optional T0 facility

Schematic

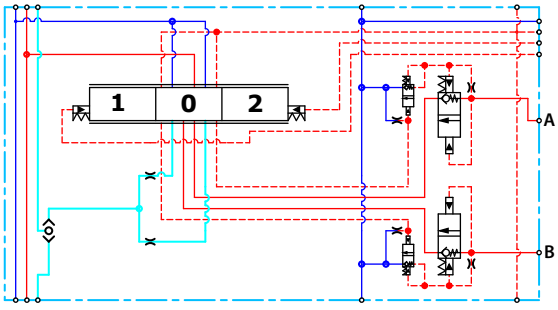

Technical specification for A/B-port

Max. continuous pressure	Max. intermittent pressure	Max. rated flow
350 bar [5076 psi]	420 bar [6090 psi]	125 l/min [33 US gal/min]

Technical specification

Parameter	Minimum	Recommended range	Maximum
Fluid temperature	-30°C [-22°F]	30 to 60°C [86 to 140°F]	90° [194°F]
Fluid viscosity	4 mm^2/s [39 SUS]	12 to 75 mm^2/s [65 to 347 SUS]	460 mm^2/s [2128 SUS]
Fluid cleanliness	23/19/16 (according to ISO 4406)		
Operating temperature	Ambient: -30 to 60°C [-22 to 140°F]		

Part numbers for uncompensated PVBZ with POC

Part number	A/B-port	POC
157B6051	G½"	B-port
157B6052		A/B-port
157B6451	7/8–14 UNF	B-port
157B6452		A/B-port
157B6969	None – machined top[1)]	A-port

[1)] Prepared for mounting of a PVBD diverter. For more details, see *PVBD Diverter Module* on page 84.

PVB Basic Modules

Compensated PVB

The compensated PVB is intended for controlling a work function where the function behavior in terms of flow and pressures requires independence on the load pressure of other functions used simultaneously.

The Compensated PVB features:

- Integrated LS shuttle network
- Integrated compensator
- Optional shock/anti-cavitation valve facility (PVLP)
- Optional T0 facility and external T0 port

Compensated PVB schematic

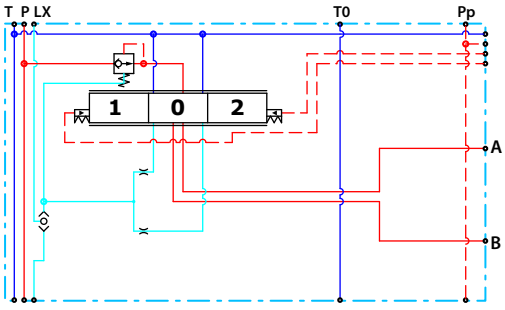

Technical specification for A/B-port

Max. continuous pressure	Max. intermittent pressure	Max. rated flow *
350 bar [5067 psi]	420 bar [6090 psi]	125 l/min [33 US gal/min]

* With turbo function spool @ max rated flow of 130 l/min is possible

Technical specification

Parameter	Minimum	Recommended range	Maximum
Fluid temperature	-30°C [-22°F]	30 to 60°C [86 to 140°F]	90° [194°F]
Fluid viscosity	4 mm^2/s [39 SUS]	12 to 75 mm^2/s [65 to 347 SUS]	460 mm^2/s [2128 SUS]
Fluid cleanliness	23/19/16 (according to ISO 4406)		
Operating temperature	Ambient: -30 to 60°C [-22 to 140°F]		

PVB Basic Modules

Performance graphs (Theoretical)

PVLP shock valve characteristics

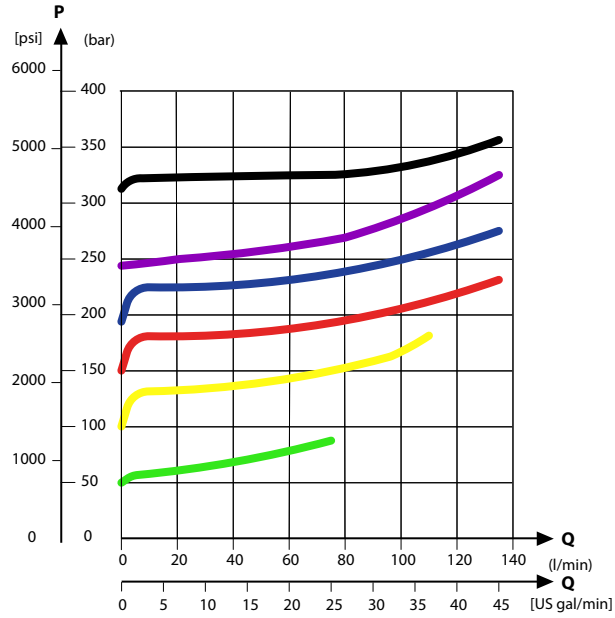

Load Independent Fluid Flow – Pressure Compensated PVB

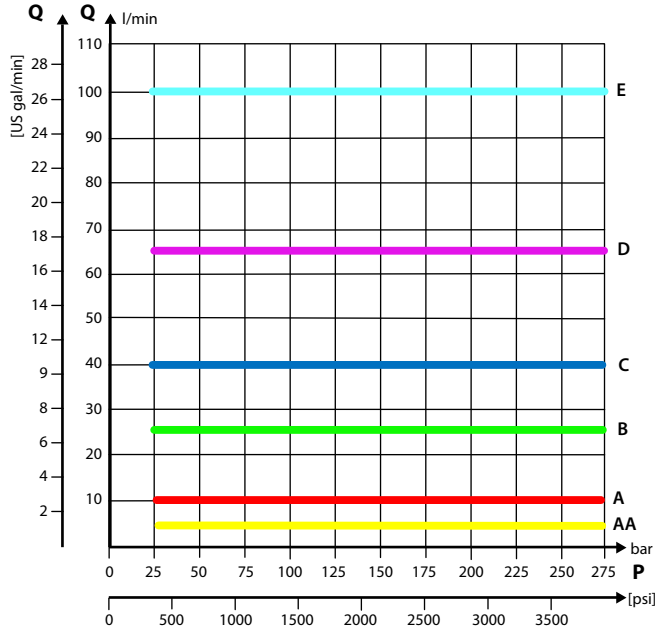

PVB Basic Modules

PVLP/PVLA suction valve characteristics

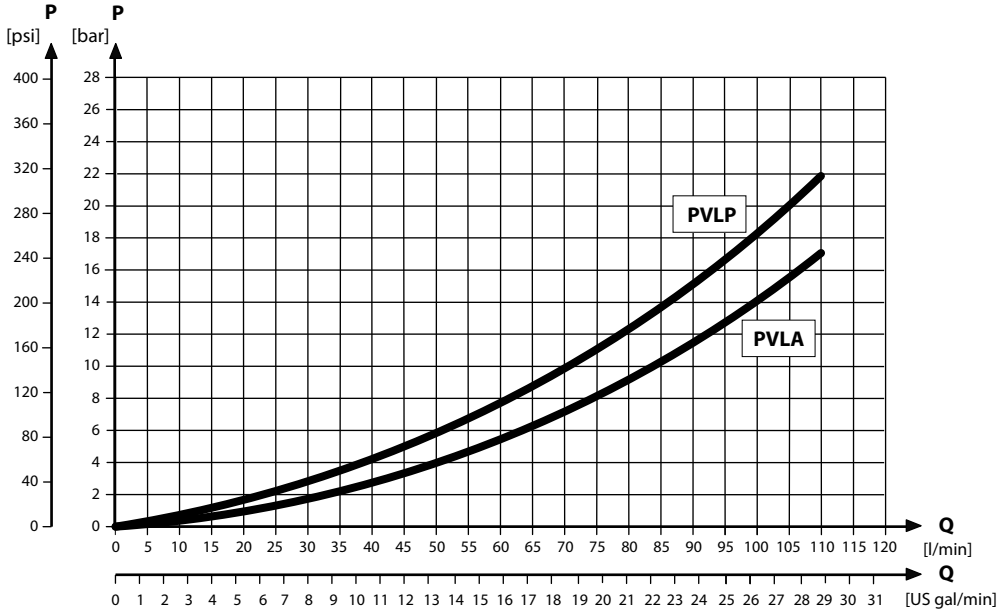

Part numbers for compensated PVB

Part number	A/B-port	PVLP/PVLA	T0
157B6200	G1/2"	–	–
157B6210		–	Yes
157B6230		Yes	–
157B6240		Yes	Yes
157B6600	7/8–14 UNF	–	–
157B6922		–	Yes
157B6630		Yes	–
157B6906		Yes	Yes
157B6850	M22x1.5	Yes	Yes
157B6849	None*	–	–

* Machined top, prepared for mounting of a PVBD diverter.

PVB Basic Modules

Dampened Compensated PVB

The compensated PVB is intended for controlling a work function where the function behavior in terms of flow and pressures requires independence on the load pressure of other functions used simultaneously. The dampening of the compensator reaction will slow down the system thereby removing instability.

The dampened compensated PVB features:

- Integrated LS shuttle network
- Integrated compensator
- Optional shock/anti-cavitation valve facility (PVLP)

Compensated PVB schematic

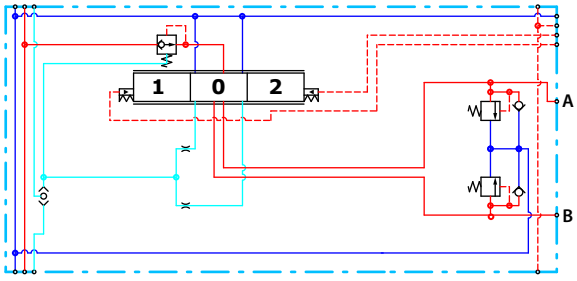

Technical specification for A/B-port

Max. continuous pressure	Max. intermittent pressure	Max. rated flow*
350 bar [5076 psi]	420 bar [6090 psi]	125 l/min [33 US gal/min]

* With turbo function spool @ max rated flow of 130 l/min is possible

Technical specification

Parameter	Minimum	Recommended range	Maximum
Fluid temperature	-30°C [-22°F]	30 to 60°C [86 to 140°F]	90° [194°F]
Fluid viscosity	4 mm^2/s [39 SUS]	12 to 75 mm^2/s [65 to 347 SUS]	460 mm^2/s [2128 SUS]
Fluid cleanliness	23/19/16 (according to ISO 4406)		
Operating temperature	Ambient: -30 to 60°C [-22 to 140°F]		

PVB Basic Modules

Performance graphs (Theoretical)

PVLP shock valve characteristics

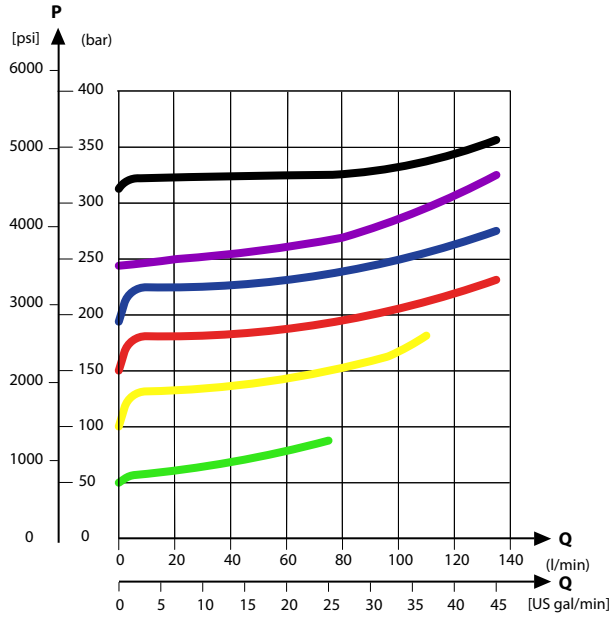

Load Independent Fluid Flow – Pressure Compensated PVB

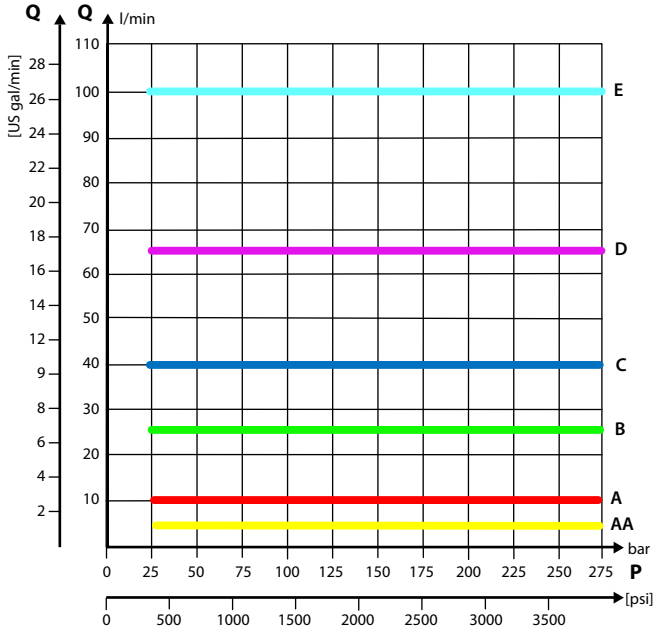

PVB Basic Modules

PVLP/PVLA suction valve characteristics

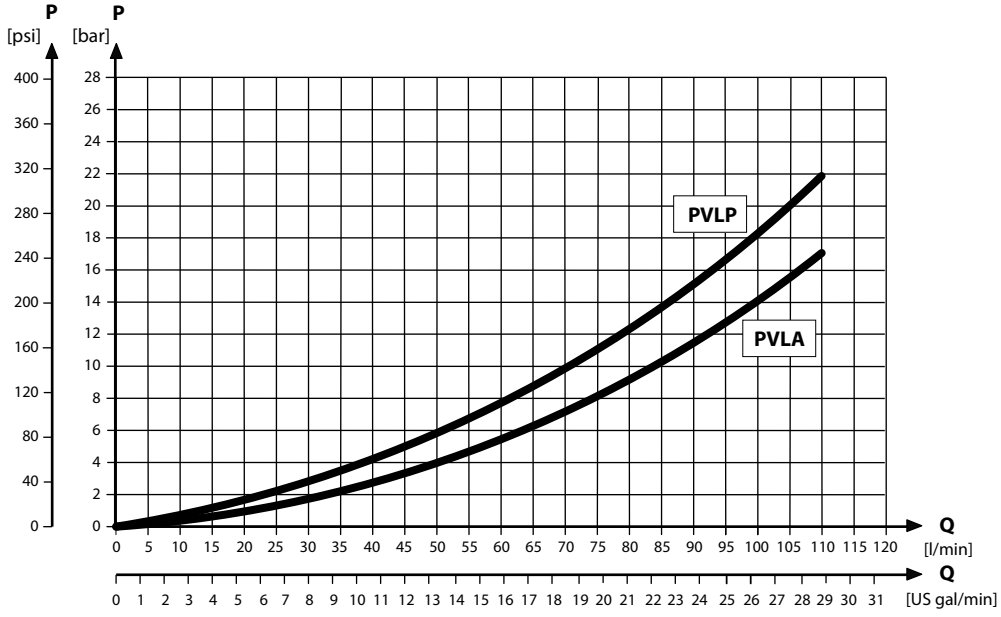

Part numbers for damp. compensated PVB

Part number	A/B-port	PVLP/PVLA
157B6206	G1/2"	–
157B6236		Yes
11036629	7/8–14 UNF	–
11036630		Yes

PVB Basic Modules

Dampened compensated PVB with LS A/B

The compensated PVB is intended for controlling a work function where the function behavior in terms of flow and pressures requires independence on the load pressure of other functions used simultaneously. The dampening of the compensator reaction will slow down the system thereby removing instability. The integrated $LS_{A/B}$ relief valve is used to limit the maximum work port build-up on the A/B-ports individually.

The dampened compensated PVB with LS A/B features:

- Integrated LS shuttle network
- Integrated compensator
- Integrated adjustable $LS_{A/B}$ pressure relief valves
- External $LS_{A/B}$ port connection
- Optional shock/anti-cavitation valve facility (PVLP)

Dampened compensated PVB with LS A/B schematic

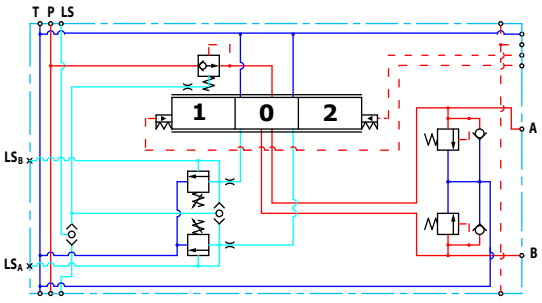

Technical specification for A/B-port

Max. continuous pressure	Max. intermittent pressure	Max. rated flow*
350 bar [5076 psi]	420 bar [6090 psi]	125 l/min [33 US gal/min]

* With turbo function spool @ max rated flow of 130 l/min is possible

Parameter	Minimum	Recommended range	Maximum
Fluid temperature	-30°C [-22°F]	30 to 60°C [86 to 40°F]	90°C [194°F]
Fluid viscosity	4 mm2/s [39 SUS]	12 to 75 mm2/s [65 to 347 SUS]	460 mm2/s [2128 SUS]
Fluid cleanliness	23/19/16 (according to ISO 4406)		
Operating temperature	Ambient: -30 to 60°C [-22 to 140°F]		

PVB Basic Modules

Performance graphs (Theoretical)

PVLP shock valve characteristics

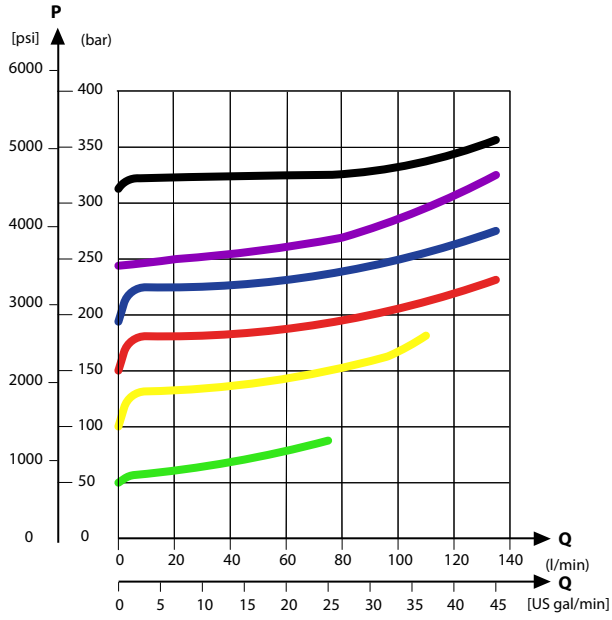

Load Independent Fluid Flow – Pressure Compensated PVB

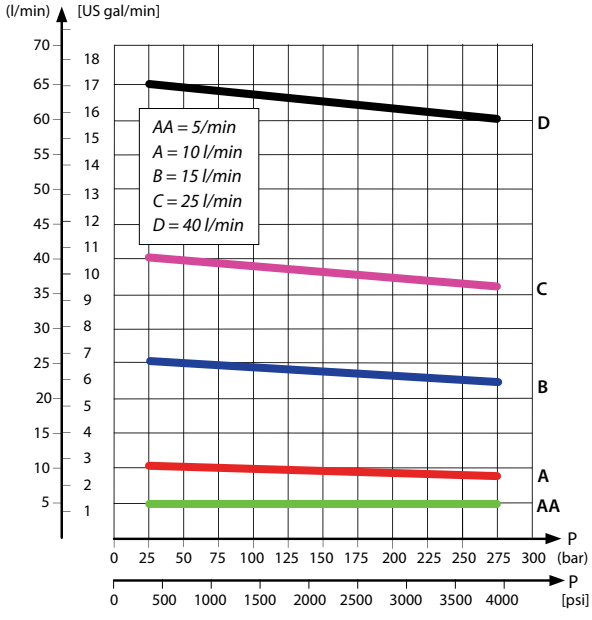

PVB Basic Modules

PVLP/PVLA suction valve characteristics

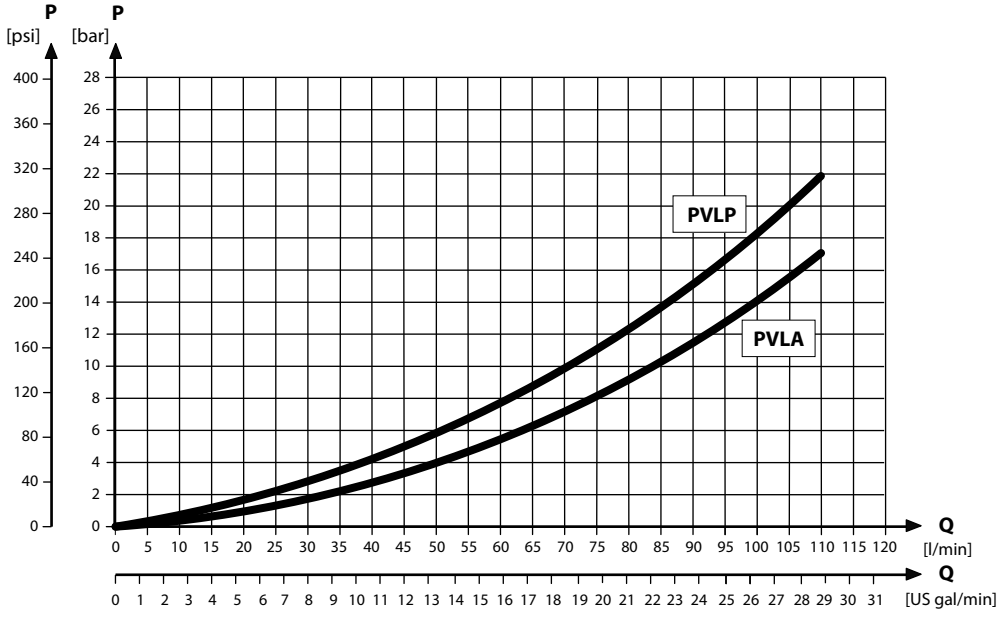

PVB pressure compensated for LS A/B characteristics

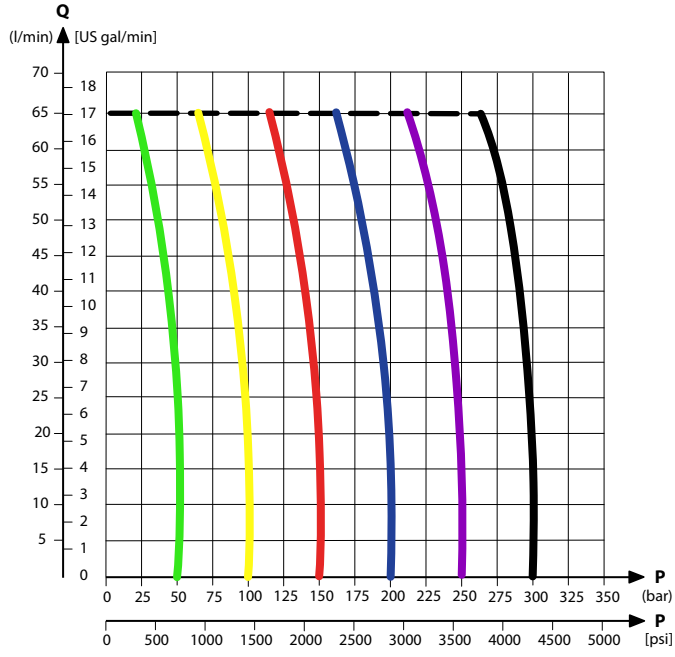

Part number	A/B-port	LS-port	PVLP/PVLA
157B6208	G1/2	G1/4	-
157B6238			Yes

PVB Basic Modules

Compensated PVB with LS A/B

The compensated PVB is intended for controlling a work function where the function behavior in terms of flow and pressures requires independency on the load pressure of other functions used simultaneously. The integrated $LS_{A/B}$ relief valve is used to limit the maximum work port build-up on the A/B-ports individually.

The compensated PVB with $LS_{A/B}$ features:

- Integrated LS shuttle network
- Integrated compensator
- Integrated adjustable $LS_{A/B}$ pressure relief valves
- External $LS_{A/B}$ port connection
- Integrated $LS_{A/B}$ shuttle valve for float spool usage
- Optional shock/anti-cavitation valve facility (PVLP)
- Optional T0 facility

Compensated PVB with LS schematic

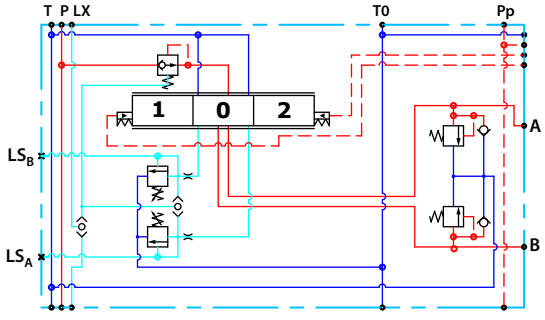

Technical specification for A/B-port

Max. continuous pressure	Max. intermittent pressure	Max. rated flow*
350 bar [5076 psi]	420 bar [6090 psi]	125 l/min [33 US gal/min]

* With turbo function spool @ max rated flow of 130 l/min is possible

Technical specification

Parameter	Minimum	Recommended range	Maximum
Fluid temperature	-30°C [-22°F]	30 to 60°C [86 to 140°F]	90° [194°F]
Fluid viscosity	4 mm^2/s [39 SUS]	12 to 75 mm^2/s [65 to 347 SUS]	460 mm^2/s [2128 SUS]
Fluid cleanliness	23/19/16 (according to ISO 4406)		
Operating temperature	Ambient: -30 to 60°C [-22 to 140°F]		

PVB Basic Modules

Performance graphs (Theoretical)

PVLP shock valve characteristics

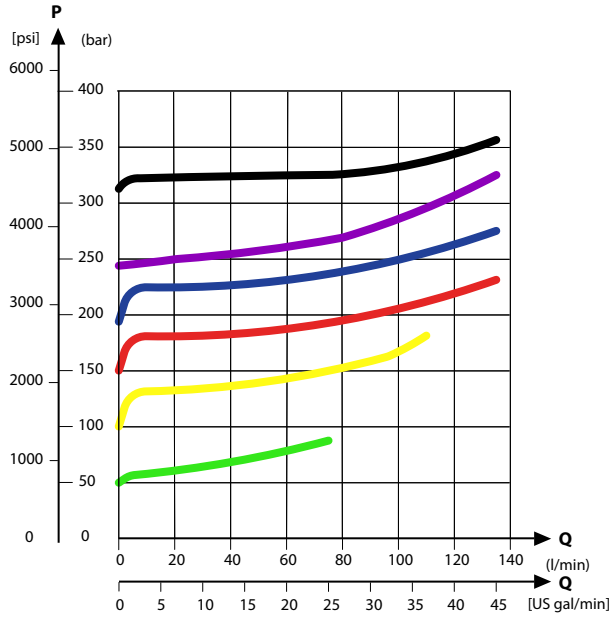

Load Independent Fluid Flow – Pressure Compensated PVB

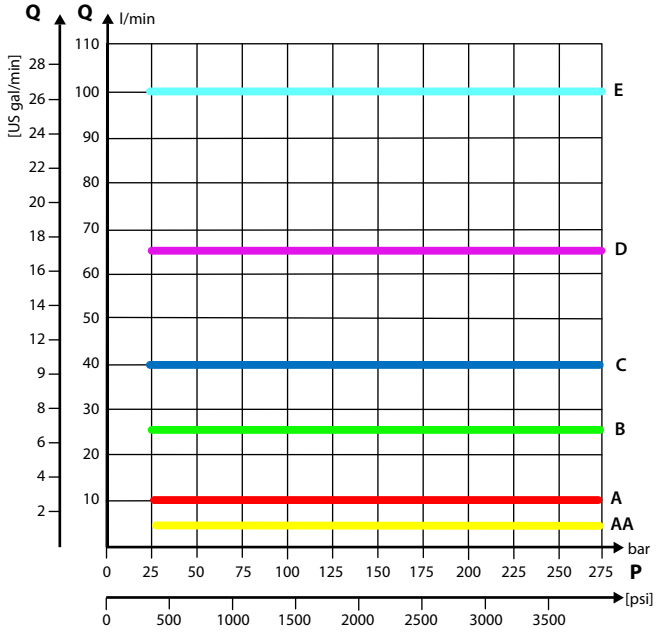

PVB Basic Modules

PVLP/PVLA suction valve characteristics

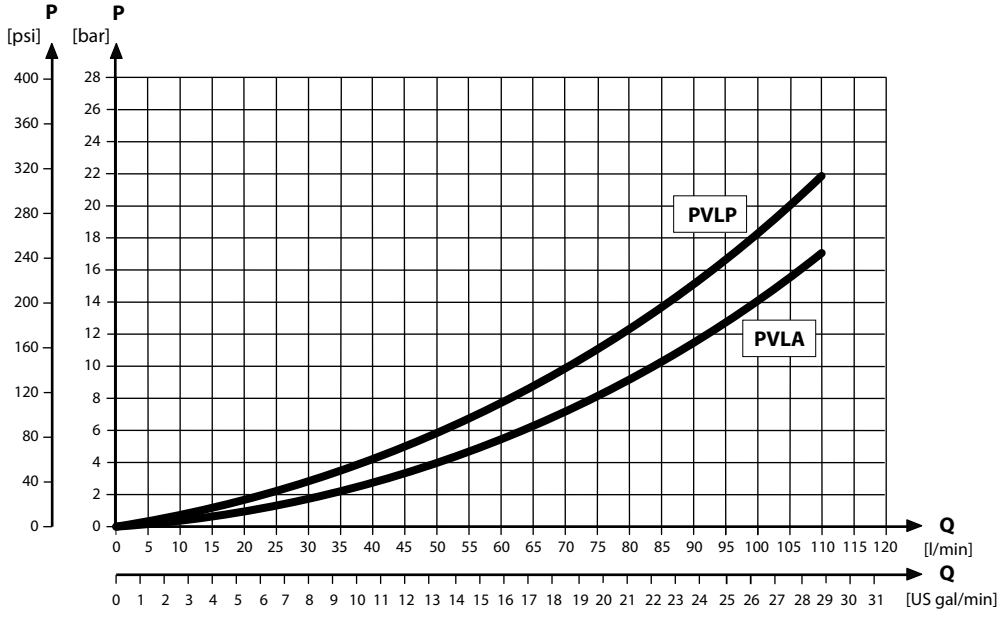

PVB pressure compensated for LS A/B characteristics

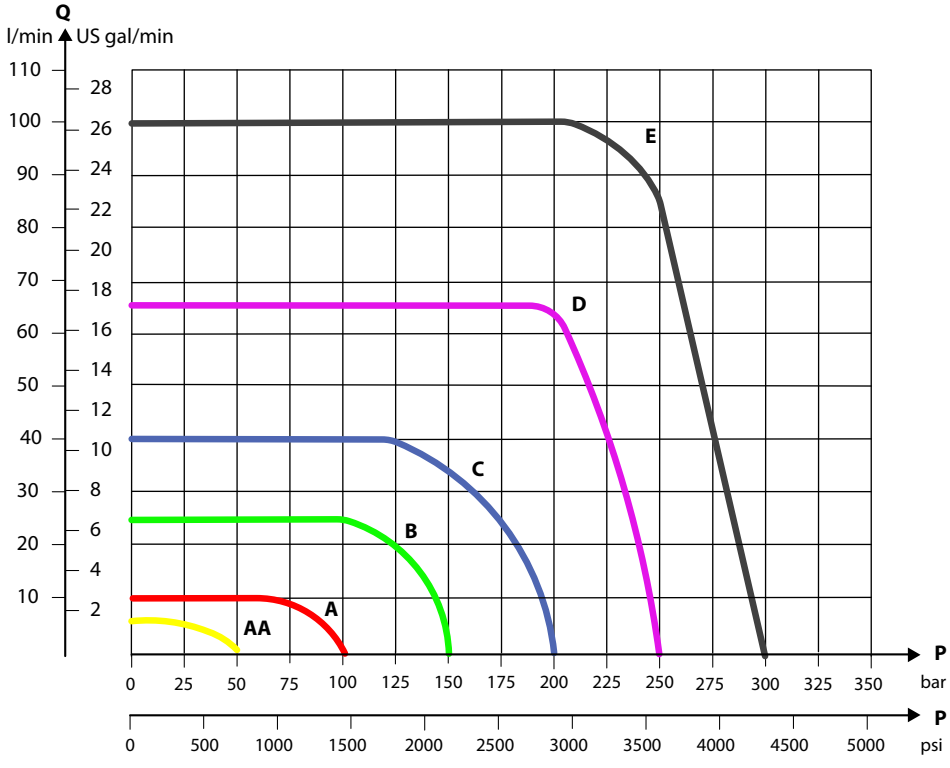

PVB Basic Modules

Part numbers for compensated PVB with LS A/B (all with shuttle)

Part number	A/B-port	LS–port	PVLP/PVLA	T0
157B6203	G1/2"	G1/4"	–	–
157B6213			–	Yes
157B6233			Yes	–
157B6243			Yes	Yes
157B6603	7/8–14 UNF	1/2–20 UNF	–	–
157B6613			–	Yes
157B6633			Yes	–
157B6643			Yes	Yes

PVB Basic Modules

Compensated high flow PVB

The compensated PVB is intended for controlling a work function where the function behavior in terms of flow and pressures requires independence on the load pressure of other functions used simultaneously.

The bleed-off will prevent pressure build-up on the work ports in neutral.

Features

- Integrated LS shuttle network
- Integrated high flow compensator with bleed-off
- Integrated adjustable $LS_{A/B}$ pressure relief valves
- Optional shock/anti-cavitation valve facility (PVLP)
- Optional T0 facility

Compensated high flow PVB schematic

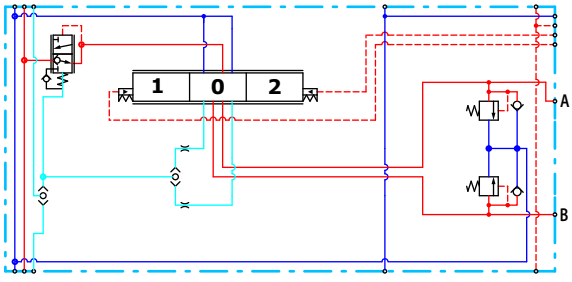

Technical specification for A/B-port

Max. continuous pressure	Max. intermittent pressure	Max. rated flow
350 bar [5076 psi]	420 bar [6090 psi]	130 l/min [34 US gal/min]

Technical specification

Parameter	Minimum	Recommended range	Maximum
Fluid temperature	-30°C [-22°F]	30 to 60°C [86 to 140°F]	90° [194°F]
Fluid viscosity	4 mm^2/s [39 SUS]	12 to 75 mm^2/s [65 to 347 SUS]	460 mm^2/s [2128 SUS]
Fluid cleanliness	23/19/16 (according to ISO 4406)		
Operating temperature	Ambient: -30 to 60°C [-22 to 140°F]		

PVB Basic Modules

Performance graphs (Theoretical)

PVLP shock valve characteristics

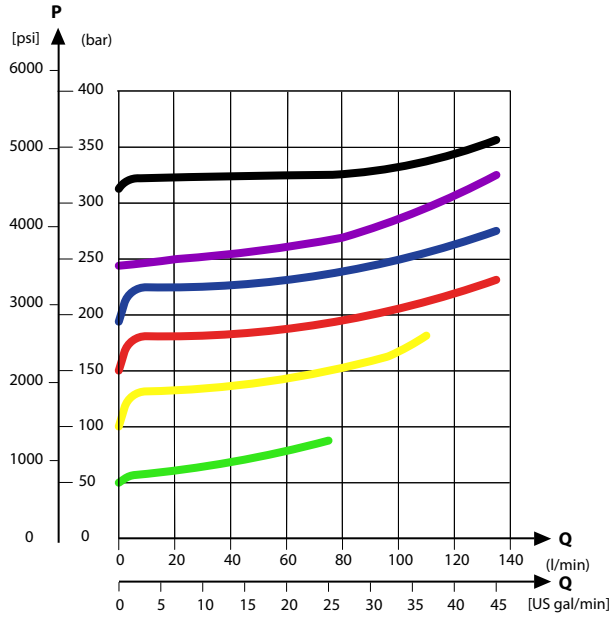

Load Independent Fluid Flow – Pressure Compensated PVB

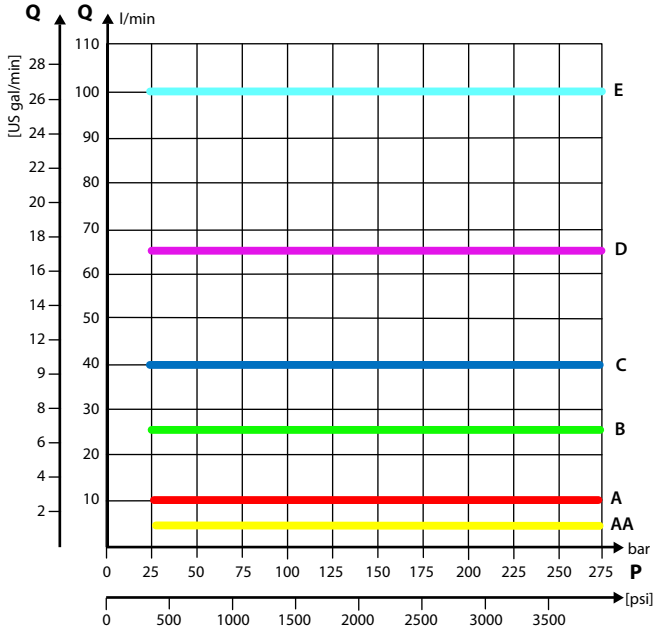

PVB Basic Modules

PVLP/PVLA suction valve characteristics

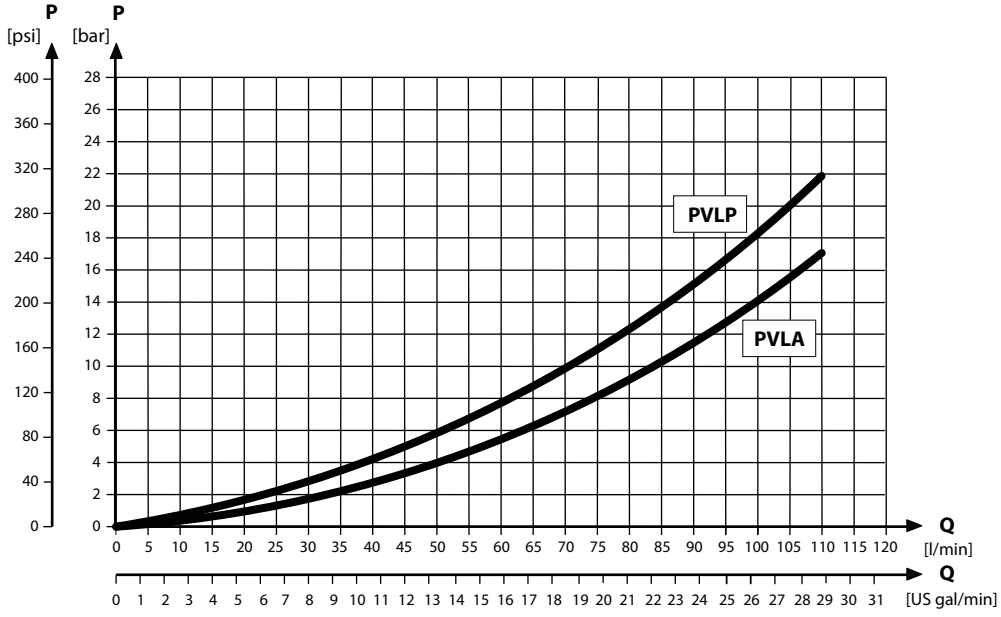

Part numbers for compensated high flow PVB

Part number	A/B-port	PVLP/PVLA	LS A/B shuttle	T0 facility
11091947	7/8–14 UNF	Yes	Yes	Yes
11119463		—	—	Yes
11126962		—	—	Yes
157B6938		Yes	—	—
157B6852	G½"	Yes	—	—

PVB Basic Modules

Compensated high flow PVB with LS A/B

The compensated PVB is intended for controlling a work function where the function behavior in terms of flow and pressures requires independence on the load pressure of other functions used simultaneously. The integrated $LS_{A/B}$ relief valve is used to limit the maximum work port build-up on the A/B-ports individually.

The bleed-off will prevent pressure build-up on the work ports in neutral.

Features

- Integrated LS shuttle network
- Integrated high flow compensator with bleed-off
- Integrated adjustable $LS_{A/B}$ pressure relief valves
- Integrated $LS_{A/B}$ shuttle valve for float spool usage
- External $LS_{A/B}$ port connection
- Optional shock/anti-cavitation valve facility (PVLP)
- Optional T0 facility

Compensated high flow PVB with LS A/B schematic

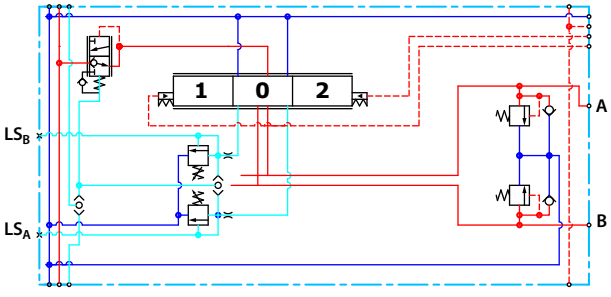

Technical specification for A/B-port

Max. continuous pressure	Max. intermittent pressure	Max. rated flow
350 bar [5076 psi]	420 bar [6090 psi]	130 l/min [34 US gal/min]

Technical specification

Parameter	Minimum	Recommended range	Maximum
Fluid temperature	-30°C [-22°F]	30 to 60°C [86 to 140°F]	90° [194°F]
Fluid viscosity	4 mm^2/s [39 SUS]	12 to 75 mm^2/s [65 to 347 SUS]	460 mm^2/s [2128 SUS]
Fluid cleanliness	23/19/16 (according to ISO 4406)		
Operating temperature	Ambient: -30 to 60°C [-22 to 140°F]		

PVB Basic Modules

Performance graphs (Theoretical)

PVLP shock valve characteristics

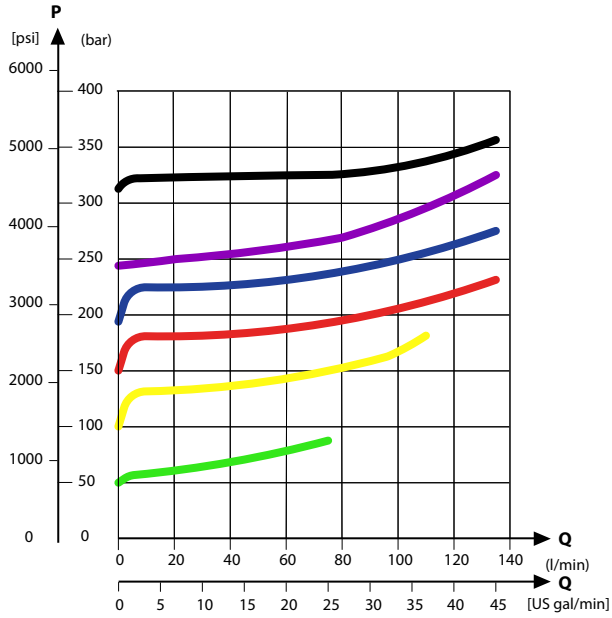

Load Independent Fluid Flow – Pressure Compensated PVB

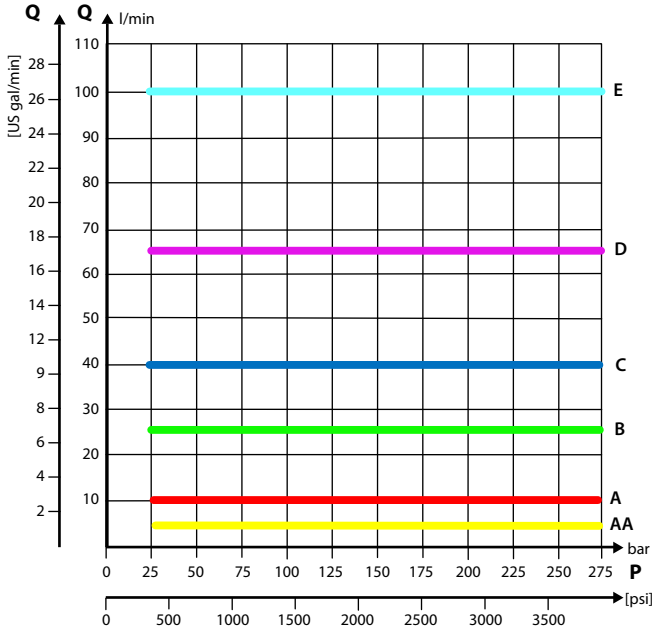

PVB Basic Modules

PVLP/PVLA suction valve characteristics

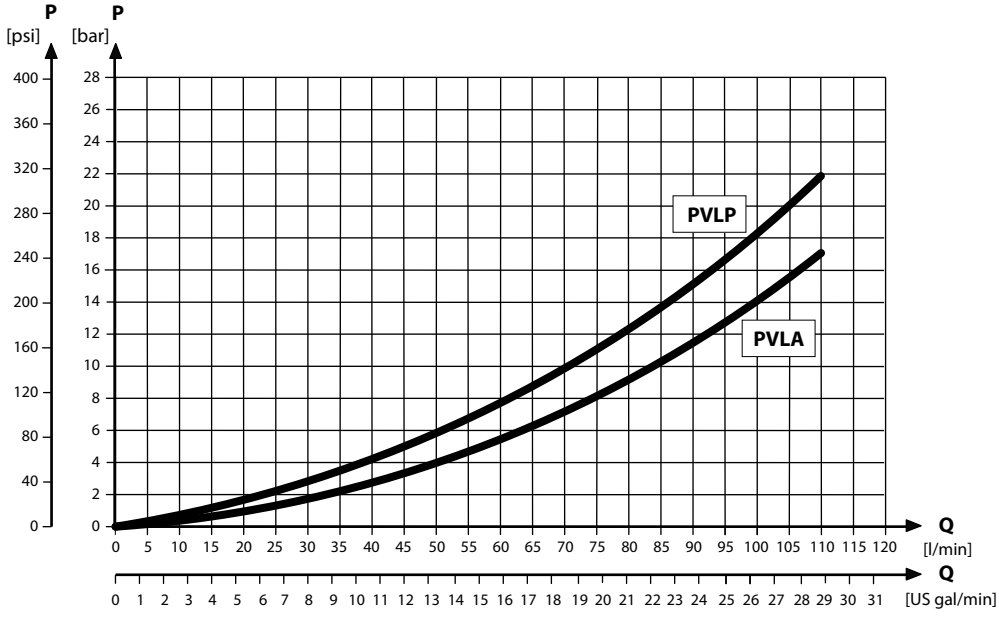

PVB pressure compensated for LS A/B characteristics

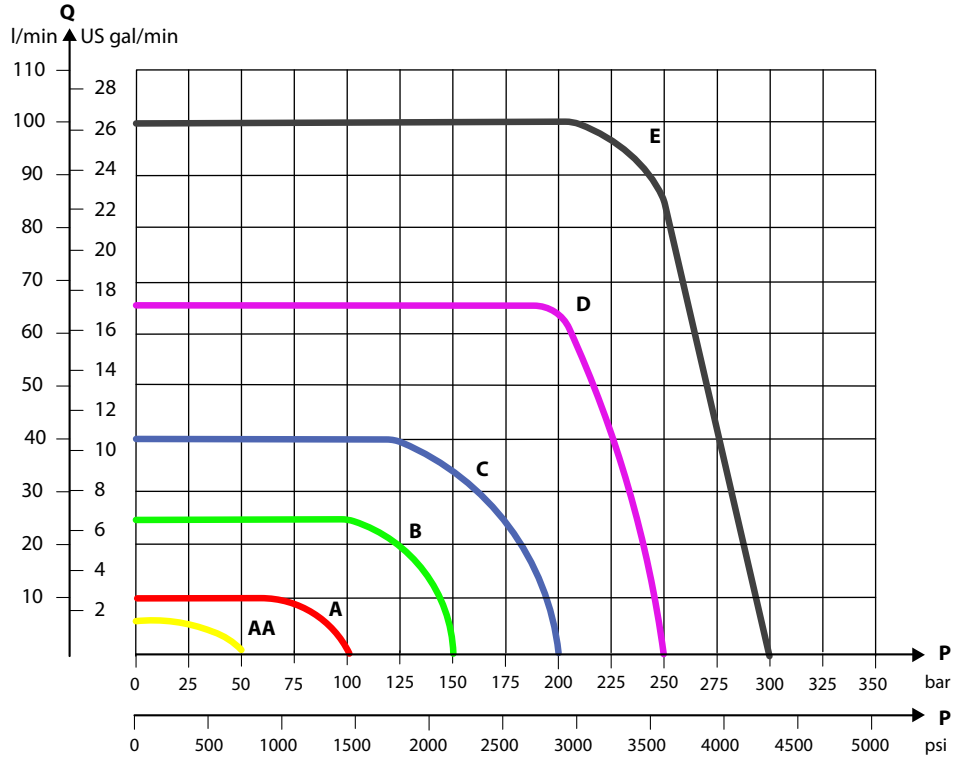

PVB Basic Modules

Part numbers for comp. high flow PVB with LS

Part number	A/B-port	$LS_{A/B}$ port	PVLP/PVLA	$LS_{A/B}$ shuttle	T0 facility
157B6855	G½"	G¼"	—	Yes	—
11059838			—		Yes
157B6854			Yes		—
11126963	7/8–14 UNF	½-20 UNF	—		Yes
11126964			Yes		Yes
11127277			Yes		—

PVB Basic Modules

Compensated PVBZ with POC

The compensated PVB is intended for controlling a work function where the function behavior in terms of flow and pressures requires independence on the load pressure of other functions used simultaneously.

The bleed-off will prevent pressure build-up on the work ports in neutral.

Features

- Integrated LS shuttle network
- Integrated compensator
- Integrated POC
- T0 facility
- Optional $LS_{A/B}$ shuttle valve facility for float spool use
- Optional thermo-relief valve

Schematic

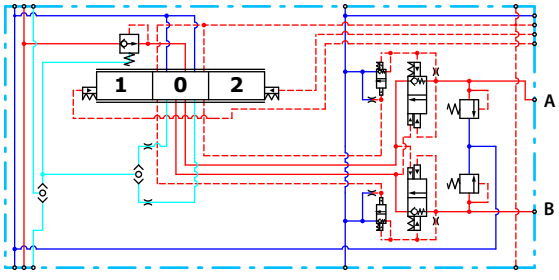

Technical specification for A/B-port

Max. continuous pressure	Max. intermittent pressure	Max. rated flow
350 bar [5076 psi]	420 bar [6090 psi]	100 l/min [26 US gal/min]

Technical specification

Parameter	Minimum	Recommended range	Maximum
Fluid temperature	-30°C [-22°F]	30 to 60°C [86 to 140°F]	90° [194°F]
Fluid viscosity	4 mm^2/s [39 SUS]	12 to 75 mm^2/s [65 to 347 SUS]	460 mm^2/s [2128 SUS]
Fluid cleanliness	23/19/16 (according to ISO 4406)		
Operating temperature	Ambient: -30 to 60°C [-22 to 140°F]		

PVB Basic Modules

Performance graphs (Theoretical)

Load Independent Fluid Flow – Pressure Compensated PVB

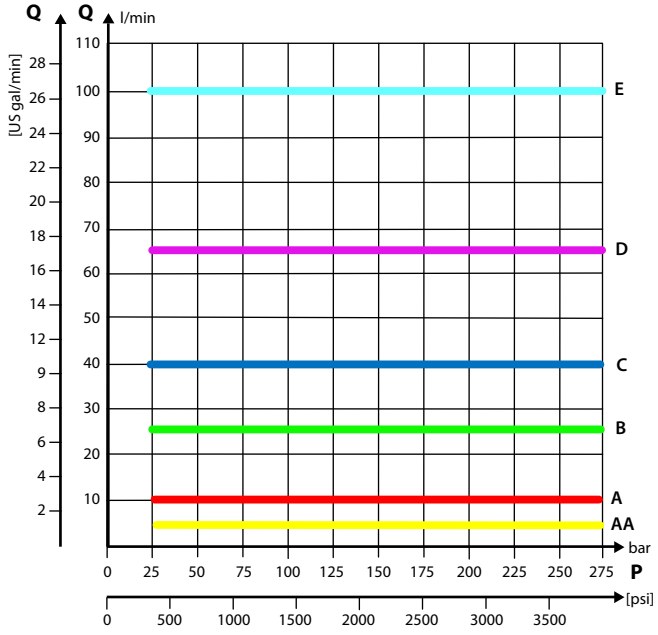

Part numbers for compensated PVBZ with POC

Part number	A/B-port	POC	$LS_{A/B}$ shuttle	Thermo relief
157B6251	G1/2"	B-port	—	—
157B6252		A/B-port	—	—
157B6261		B-port	—	Yes
157B6262		A/B-port	—	Yes
157B6266		A/B-port	Yes	Yes
157B6960		A-port		—
157B6651	7/8–14 UNF	B-port	—	—
157B6652		A/B-port	—	—
157B6661		A/B-port	—	Yes
157B6662		A/B-port	—	Yes
157B6666		A/B-port	Yes	Yes
157B6954	M22x1.5 mm	A/B-port	Yes	Yes
157B6952	None – machined top*	A/B-port	Yes	Yes
157B6958	None – machined top*	A/B-port	Yes	Yes
11157082	None – machined top*	A-port	—	—

* Prepared for mounting of a PVBD diverter. For more details, see *PVBD Diverter Module* on page 84.

PVB Basic Modules

Compensated high flow PVBZ with POC

The compensated high flow PVBZ with POC is intended for controlling a work function where the function behavior in terms of flow and pressures requires independence on the load pressure of other functions used simultaneously.

The bleed-off will prevent pressure build-up on the work ports in neutral.

The Pilot Operated Check valve giving very low leakage will prevent cylinder creep.

Features

- Integrated LS shuttle network
- Integrated high flow compensator with bleed-off
- Integrated POC
- T0 facility
- Optional $LS_{A/B}$ shuttle valve facility for float spool use
- Optional shock/anti-cavitation valve facility (PVLP)

Schematic

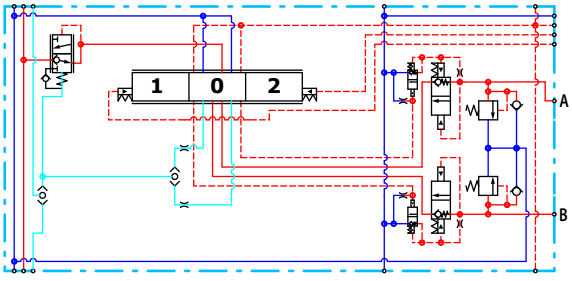

Technical specification for A/B-port

Max. continuous pressure	Max. intermittent pressure	Max. rated flow
350 bar [5076 psi]	420 bar [6090 psi]	125 l/min [33 US gal/min]

Technical specification

Parameter	Minimum	Recommended range	Maximum
Fluid temperature	-30°C [-22°F]	30 to 60°C [86 to 140°F]	90° [194°F]
Fluid viscosity	4 mm^2/s [39 SUS]	12 to 75 mm^2/s [65 to 347 SUS]	460 mm^2/s [2128 SUS]
Fluid cleanliness	23/19/16 (according to ISO 4406)		
Operating temperature	Ambient: -30 to 60°C [-22 to 140°F]		

PVB Basic Modules

Performance graphs (Theoretical)

PVLP shock valve characteristics

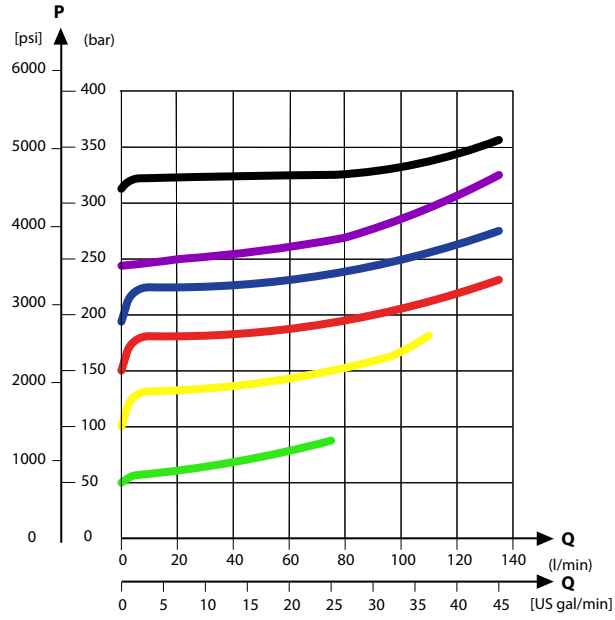

Load Independent Fluid Flow – Pressure Compensated PVB

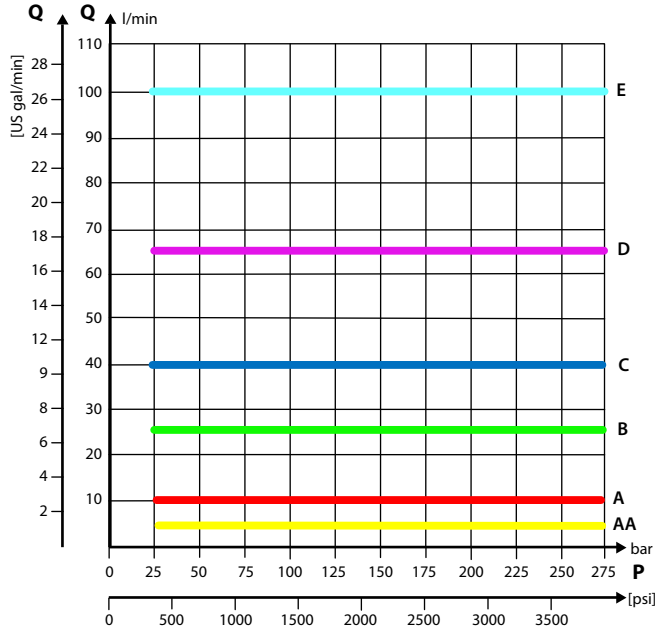

PVB Basic Modules

Part numbers for high flow PVBZ with POC

Part number	A/B-port	PVLP/PVLA	$LS_{A/B}$ shuttle	T0 facility
11091947	7/8–14 UNF	Yes	Yes	Yes
11119463		—	—	Yes
11126962		—	—	Yes
157B6938		Yes	—	—
157B6852	G½"	Yes	—	—

PVB Basic Modules

Compensated high flow PVBZ with POC and manifold interface

The compensated PVB is intended for controlling a work function where the function behavior in terms of flow and pressures requires independence on the load pressure of other functions used simultaneously.

The integrated $LS_{A/B}$ relief valve is used to limit the maximum work port build-up on the A/B-ports individually.

The bleed-off will prevent pressure build-up on the work ports in neutral.

Features

- Integrated LS shuttle network
- Integrated high flow compensator with bleed-off
- Integrated POC
- T0 facility
- Integrated adjustable $LS_{A/B}$ pressure relief valves
- Optional thermo relief valve

Schematic

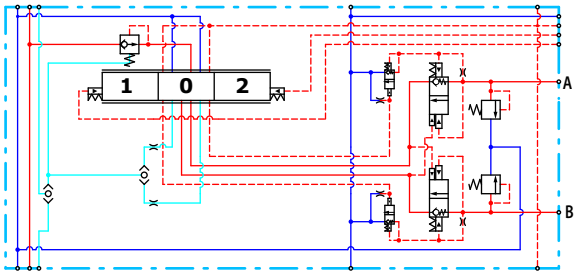

Technical specification for A/B-port

Max. continuous pressure	Max. intermittent pressure	Max. rated flow
350 bar [5076 psi]	420 bar [6090 psi]	125 l/min [33 US gal/min]

Technical specification

Parameter	Minimum	Recommended range	Maximum
Fluid temperature	-30°C [-22°F]	30 to 60°C [86 to 140°F]	90° [194°F]
Fluid viscosity	4 mm^2/s [39 SUS]	12 to 75 mm^2/s [65 to 347 SUS]	460 mm^2/s [2128 SUS]
Fluid cleanliness	23/19/16 (according to ISO 4406)		
Operating temperature	Ambient: -30 to 60°C [-22 to 140°F]		

PVB Basic Modules

Performance graphs (Theoretical)

Load Independent Fluid Flow – Pressure Compensated PVB

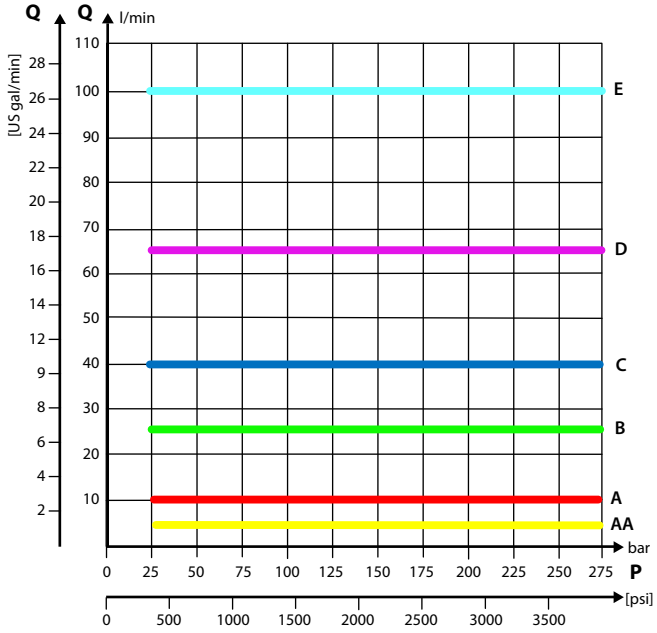

Part numbers for PVBZ - POC, manifold interface

Part number	POC
157B6958	A/B-port
11005475	A/B-port
11032961	A/B-port

PVB Basic Modules Accessories

The generic PVB module accessory platform include the PVLP shock and anti-cavitation valve and PVLA suction valve.

- *PVLP Shock and Anti-Cavitation Valve* on page 76
- *PVLA Suction Valve* on page 78

PVB Basic Modules Accessories

PVLP Shock and Anti-Cavitation Valve

The PVLP shock and anti-cavitation valve will relieve a pressure peak to the internal tank galleries and will furthermore suck oil from the tank to the work port to prevent cavitation. Pressure settings range: 32–400 bar [460–5801 psi].

The pressure setting of the PVLP must always be 20 bar [290 psi] higher than $LS_{A/B}$ setting in the same module.

PVLP schematic

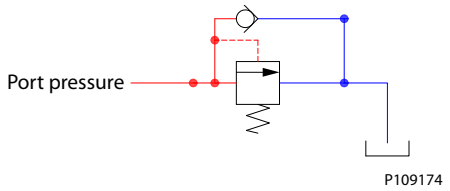

PVLP shock valve characteristics

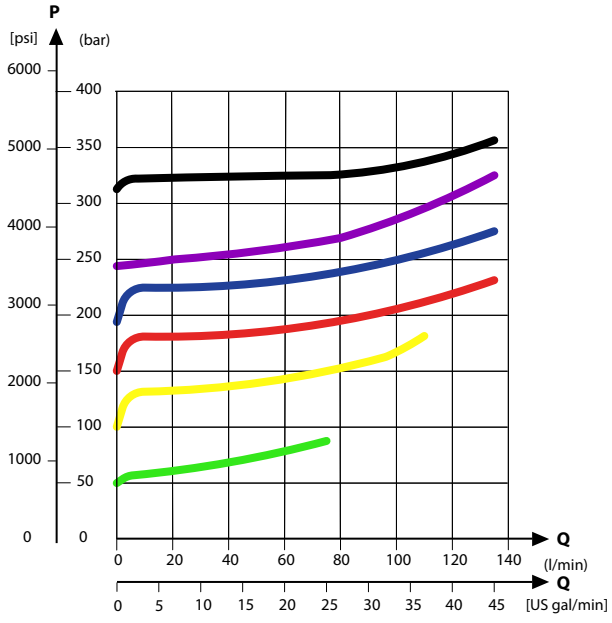

PVB Basic Modules Accessories

PVLP/PVLA suction valve characteristics

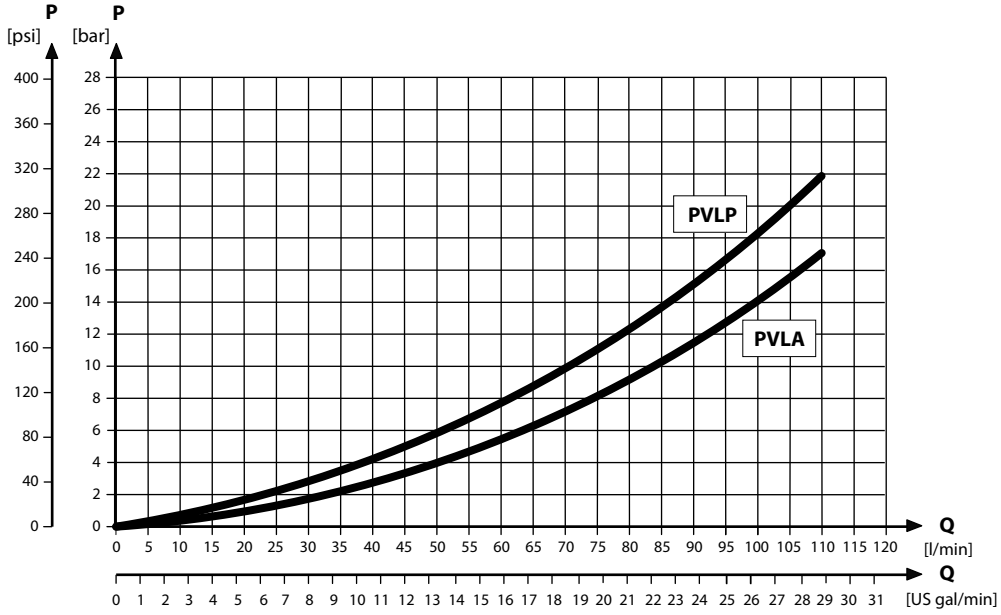

Technical specification

Parameter	Minimum	Recommended range	Maximum
Fluid temperature	-30°C [-22°F]	30 to 60°C [86 to 140°F]	90° [194°F]
Fluid viscosity	4 mm^2/s [39 SUS]	12 to 75 mm^2/s [65 to 347 SUS]	460 mm^2/s [2128 SUS]
Fluid cleanliness	23/19/16 (according to ISO 4406)		
Operating temperature	Ambient: -30 to 60°C [-22 to 140°F]		

Part numbers for PVLP according to pressure settings

Part number	Pressure in bar [psi]	Part number	Pressure in bar [psi]
157B2032	32 [464]	**157B2210**	210 [3045]
157B2050	50 [725]	**157B2230**	230 [3335]
157B2063	63 [913]	**157B2240**	240 [3480]
157B2080	80 [1160]	**157B2250**	250 [3626]
157B2100	100 [1450]	**157B2265**	265 [3844]
157B2125	125 [1813]	**157B2280**	280 [4061]
157B2140	140 [2031]	**157B2300**	300 [4351]
157B2150	150 [2176]	**157B2320**	320 [4641]
157B2160	160 [2321]	**157B2350**	350 [5076]
157B2175	175 [2538]	**157B2380**	380 [5511]
157B2190	190 [2756]	—	

PVB Basic Modules Accessories

PVLA Suction Valve

The PVLA valve is an accessory available for PVB basic modules.

The PVLA will suck fluid from the tank to the work port to prevent cavitation by the 0.5 bar spring. The plug will ensure that when using a single acting spool, all flow returning through the work port is led to tank.

PVLA schematic

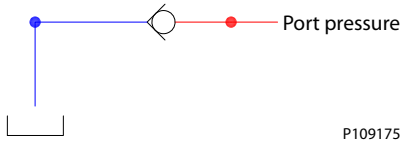

PVLP/PVLA suction valve characteristics

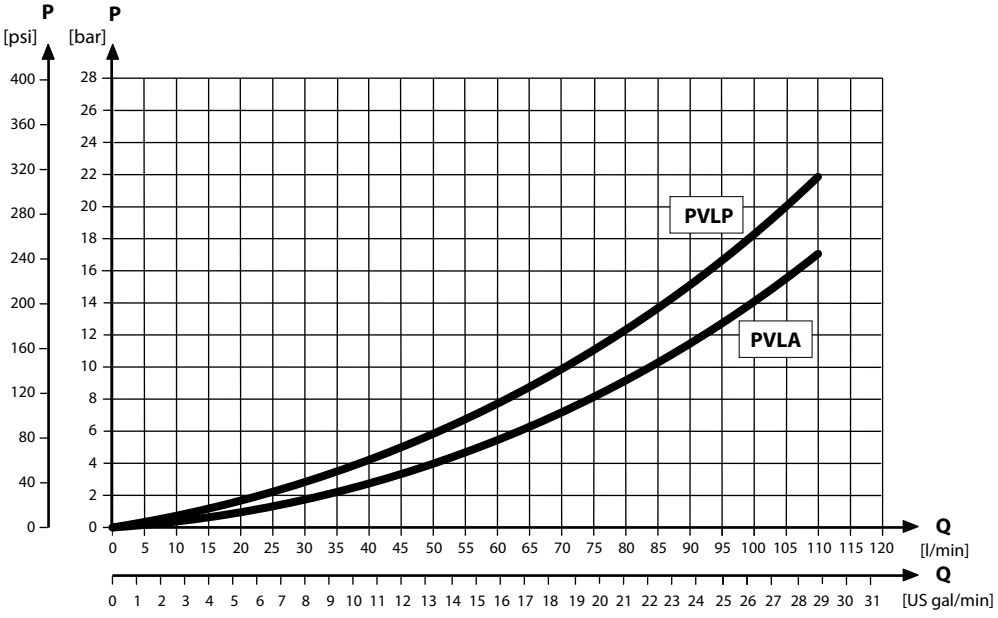

Technical specification

Parameter	Minimum	Recommended range	Maximum
Fluid temperature	-30°C [-22°F]	30 to 60°C [86 to 140°F]	90° [194°F]
Fluid viscosity	4 mm^2/s [39 SUS]	12 to 75 mm^2/s [65 to 347 SUS]	460 mm^2/s [2128 SUS]
Fluid cleanliness	23/19/16 (according to ISO 4406)		
Operating temperature	Ambient: -30 to 60°C [-22 to 140°F]		

PVLA suction valve part number

PVLA suction valve	Plug
157B2001	157B2002

PVSP and PVSPM Priority Modules

The **PVSP** and **PVSPM** are work section modules with integrated priority functionality.

The PVSP/PVSPM modules advantages:

- Integrated priority function for the OSP steering unit and/or the working hydraulics PVB
- Compatibility with open center or closed center PVP inlet modules with flow up to 160 l/min

PVSP module

PVSP dimensions

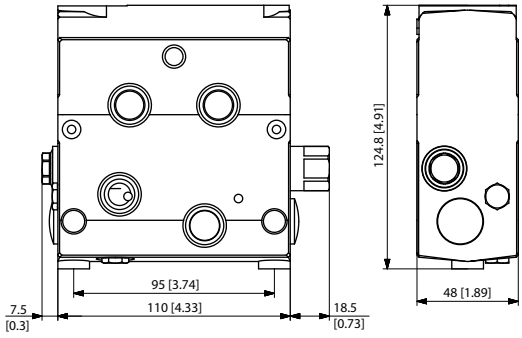

Caution

The PVSP module must be installed as the **End module** of valve group instead of a PVS end plate.

PVSPM module

PVSPM dimensions

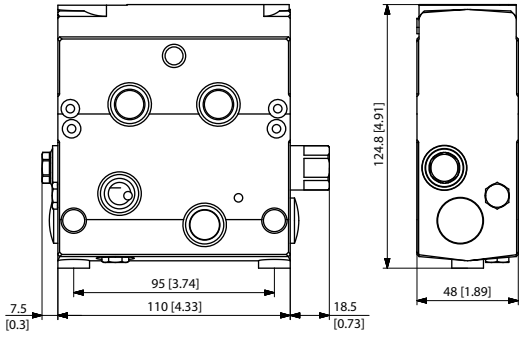

Caution

The PVSPM must be installed as a **Mid-Inlet** module.

PVSP and PVSPM Priority Modules

PVSP/PVSPM pressure drop characteristics

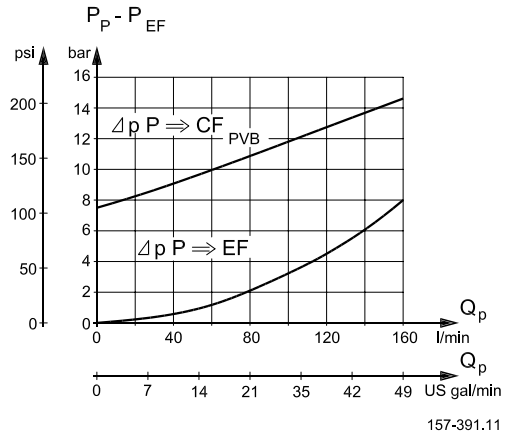

PVSP and PSPVM Versions Overview

The generic PVSP/PVSPM priority module platform includes the main five versions: **Open Center: PVSP** and **PVSPM, Closed Center: PVSP** and **PVSPM**; and **Open/Closed Center PVSPM**.

Compensator spool and shock valve has to be specified separately, see *Compensator spool for PVSP/PVSPM* on page 83.

Open Center PVSP module giving priority to OSP

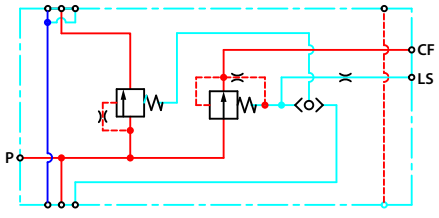

Closed Center PVSP module giving priority to OSP

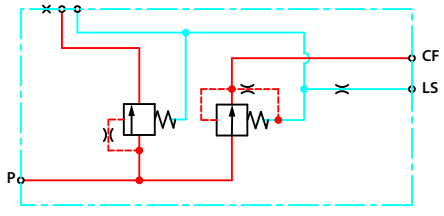

Open Center PVSPM giving priority to OSP+PVB

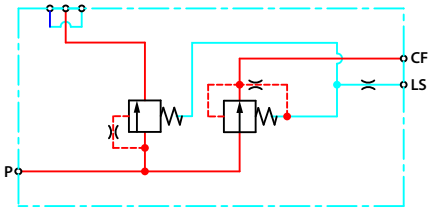

Prepared for PVLP 63 shock valve.

Closed Center PVSPM giving priority to OSP+PVB

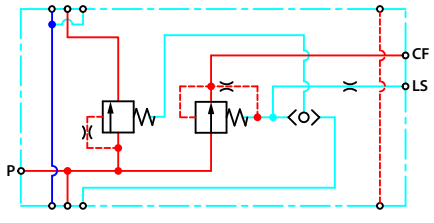

Prepared for PVLP 63 shock valve.

Open/Closed Center PVSPM module giving priority to PVB

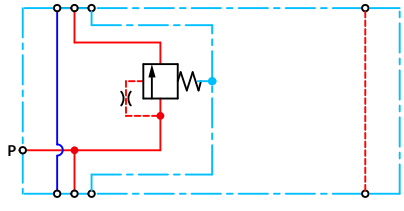

PVSP and PVSPM Priority Modules

Technical data

Maximum pump pressure	350 bar [5076 psi]
Maximum pump flow	160 l/min [42 US gal/min]
CF flow to OSP	60 l/min [12 US gal/min]
CF flow to PVB (PVSPM)	100 l/min [26.4 US gal/min]

PVSP/PSPVM part numbers

Part number	Type	CF-port	P-port	Weight
157B6708	Open center **PVSP**	G½"	G1"	3.8 kg [8.38 lb]
157B6808		7/8-14 UNF	1 5/16-12 UNF	
157B6728	Closed center**PVSP**	G½"	G1"	
157B6828		7/8-14 UNF	1 5/16-12 UNF	
157B6707	Open center **PVSPM**	G½"	G1"	
157B6727	Closed center **PVSPM**			
157B6709	Open/closed **PVSPM**			

PVSP and PVSPM Priority Modules

Sectional view of priority modules PVSP/PVSPM

The PVSP module can give priority to an OSP steering unit (or other valves) and/or to a PVB 32 module, and contains a P-connection for the pump and a CF-connection for flow control. The excessive flow is passed on through excess flow to non-prioritized PVB 32 basic modules.

PVSP/PVSPM sectional view

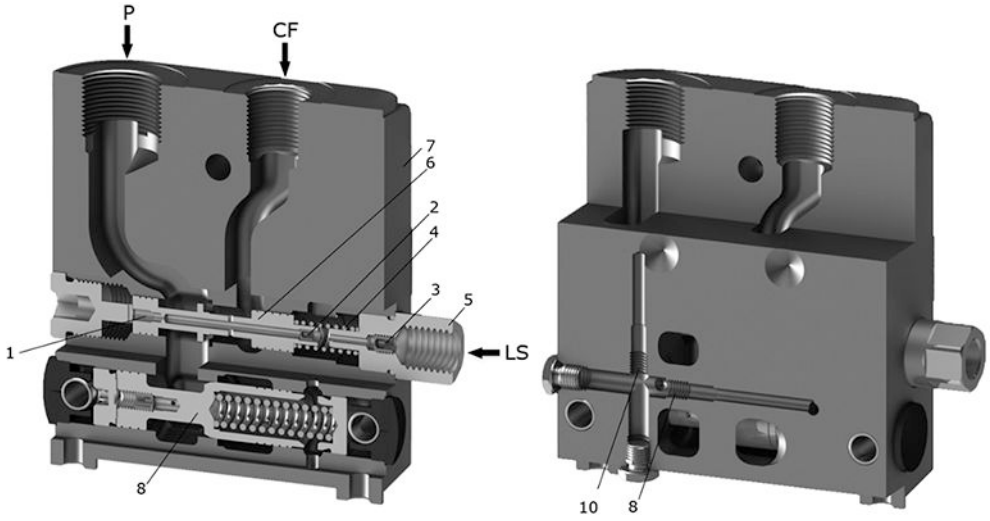

1. PP fixed orifice
2. Dynamic orifice
3. LS orifice for steering unit
4. Spring for compensator spool
5. Connection for LS-signal
6. Compensator spool for CF-connection
7. PVSP housing
8. Priority spool
9. Plug, open center
10. Plug, closed center steering unit

The standard pump connections in PVP and PVPVM must always be provided with a steel plug.

If priority is solely given to the OSP steering unit (**157B6708, 157B6728, 157B6808, 157B6828**), the PVSP module fills in the place of end plate PVS(I). When specifying valve groups of this nature, you are therefore not to give in any code number for PVS.

In valve groups that must give priority to PVB 32 (max. one PVB), PVSPM must be mounted as Mid-Inlet (**157B6707, 157B6727, 157B6709**). The PVB module that is given priority must be turned a 180° and installed on the right of PVSP, see orientation of ports in dimension drawings.

In closed center systems, the system relief valve in PVP opens at a higher pressure (max. 20 bar) on the prioritized functions. It is therefore recommended to use PVB and OSP with integrated relief valve.

If an OSP steering unit and a PVB working function are given priority at the same time (PVSPM, **157B6707, 157B6727**), it is necessary to ensure that the OSP will always have an adequate pump flow available.

In prioritized PVB modules, always remember to dismantle the LS shuttle valve. And together with prioritized PVB modules, always use end plate **157B2018** (without O-rings).

In open center systems, prioritized PVB modules and steering units must always embody an integrated relief valve to avoid that an unintended, high pressure buildup.

PVSP and PVSPM Priority Modules

Compensator spool for PVSP/PVSPM

Compensator spool sectional view

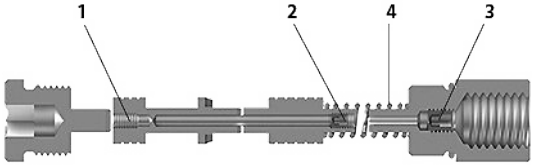

1. PP internal fixed orifice: 0.6 mm [0.024 in]
2. Dynamic orifice: 0.9 or 1 mm [0.035 in]
3. LS orifice EU: G¼" or US: 9/16-18 UNF
4. Spring

Part numbers for compensator spool with dynamic orifice

Part number	Dynamic orifice	LS orifice	Spring
157B7900	0.9 mm	1.2 mm	7 bar
157B7902		–	
157B7904		1.2 mm	10 bar
157B7903	1.0 mm		
157B7905		–	7 bar
157B7950*	0.035 in	0.047 in	101.5 psi

* US version.

Part numbers for compensator spool with static LS

Part number	Dynamic orifice	LS orifice	Spring
157B7901	Plug	1.2 mm	7 bar
157B7951*	Plug	0.047 in	101.5 psi

* US version.

PVBD Diverter Module

The PVBD is a diverter module to be mounted on top of PVB or PVBZ modules to enlarge the application range of the work section up to 2 functions.

- Pilot operated with PVC
- Auxiliary valve on tractors for function control on implements
- Cylinder positioning when the demand on neutral port leakage is limited

PVBD Diverter Module

PVBD Dimensions

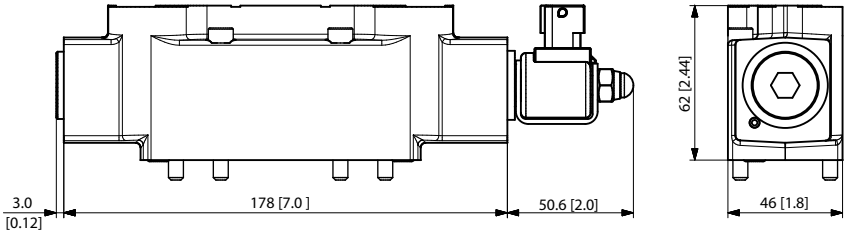

PVBD Diverter Principle

PVC off:

The shift spool is held in position (flow to A1/B1) by the spring in the right-hand side (opposite the PVC). The spring chamber is always connected to the T0 gallery in the PVBZ body.

PVC on:

Pilot pressure is led into the chamber next to the PVC. A limited flow is passing through the shift spool and the two orifices and into the spring chamber connected to T0. Pressure-drop across the orifices creates the shift force moving the shift spool towards the spring. As a result, port A2/B2 becomes active.

Leakage (along the spool clearance) from pressurized work ports A1/B1 or A2/B2 will always be drained to T0 either directly in the spring chamber or through the shift spool. This secures safe positioning of the shift spool as leakage never will build up pressure up in the control chambers.

PVBD sectional view

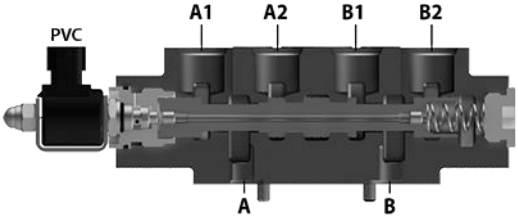

Safety recommendation

Shift of the diverter should only be possible when the main spool is in neutral. This has to be ensured through a proper set-up in the controller/MMI hardware.

PVBD Diverter Module

PVBD Diverter Module Overview

PVBD Diverter Modules are actuated with included PVC solenoid; NC and have two variants: PVBD 6/2 shift valve and Multi-valve for PVBZ **11032961**.

- PVBD 6/2 shift valve shifts between A1 & B1 / A2 & B2
- Multi-valve for PVBZ shifts A-port between PVBZ or tank gallery, for example between single and double acting actuation. B-port is prepared for PVLP.

PVBD schematic

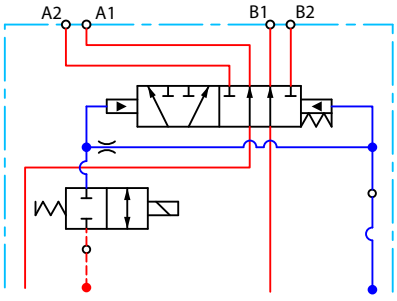

Multi-valve schematic

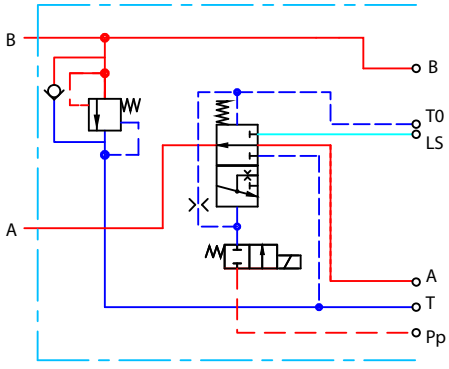

Technical data

Description	PVBD 6/2 shift	Multi-valve for PVBZ
Oil flow max. recommended	80 l/min [21.1 US gal/min]	100 l/min [26.4 US gal/min]
Max. port pressure	280 bar [4061 psi]	
Voltage Supply	12 V_{DC}; 14 bar	
Connector type	AMP JPT 2-pin	

Part numbers for PVBD diverter

Part numbers for 6/2 shift	157B1501	157B1503
Part number for Multi-valve	**11027604**	—
Port size	M22 x 1.5 mm	7/8-14 UNF

PVBS Main Spools

The main spools (PVBS) determine the flow out of the work section or the pressure build up, and are based on a generic platform with a wide selection of additional features, enabling you to tailor the PVBS to suit the demands of any hydraulic system and any function.

The PVBS main spool can be activated in three different ways:

- Mechanically by a PVM lever
- Electrically by a PVE/PVHC actuator
- Hydraulically by a PVH actuator

PVBS main spool

PVBS main spool dimensions

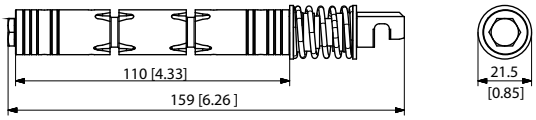

Weight: 0.25 kg [0.55 lb]

Technical specification

Parameter	Minimum	Recommended range	Maximum
Fluid temperature	-30°C [-22°F]	30 to 60°C [86 to 140°F]	90° [194°F]
Fluid viscosity	4 mm^2/s [39 SUS]	12 to 75 mm^2/s [65 to 347 SUS]	460 mm^2/s [2128 SUS]
Fluid cleanliness	23/19/16 (according to ISO 4406)		
Operating temperature	Ambient: -30 to 60°C [-22 to 140°F]		

Flow Control Spools (FC)	Flow control spools are for work sections where you want to control the speed (flow) of the work port
Pressure Control Spools (PC)	Pressure control spools are for work sections where you want to control the power (pressure) of the work port

For more information on where to use flow control or pressure control spools see application guide **AB00000079 -** *"Using flow or pressure control spools"*

Closed neutral position	In neutral position and inside of the deadband area the connection to tank is closed
Throttled open neutral position	In neutral position and inside of the deadband area the connection to tank is 10 % of the full flow function
Open/closed neutral position (drain)	In total neutral position the connection to tank is less than 10 % of the full flow function. But when moving the spool out of neutral position but still within dead band area the connection will close.

PVBS Main Spools

PVBS fluid flow characteristics—Theoretical performance

Fluid flow at different spool travel + 10 bar margin

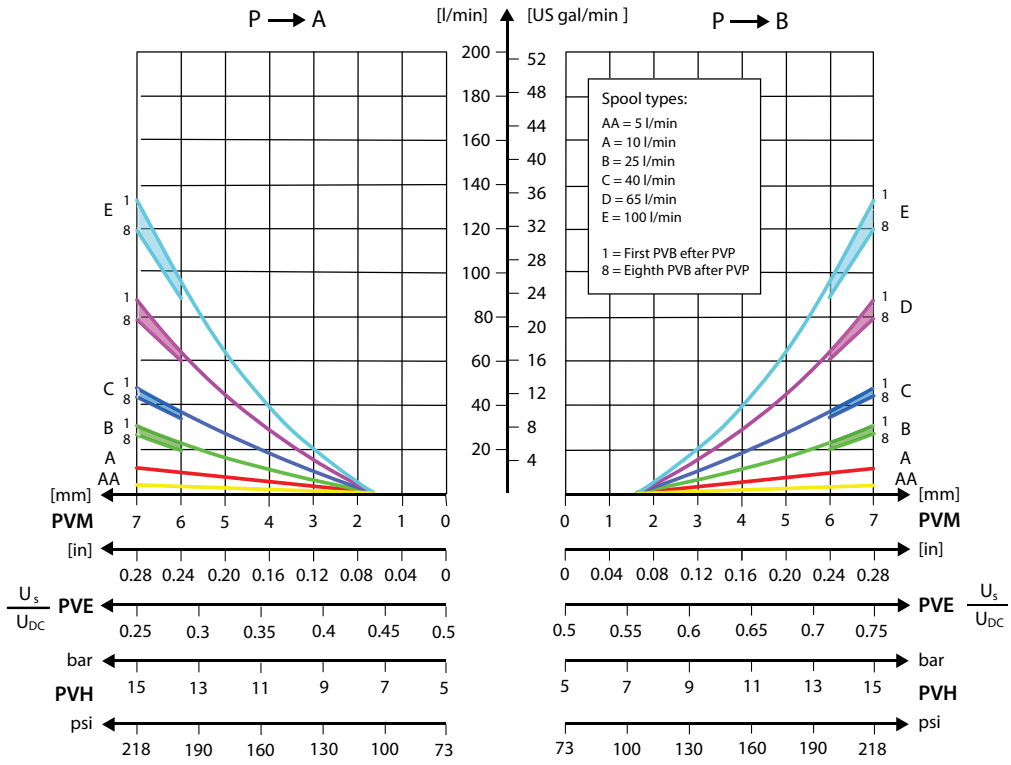

PVBS Main Spools

Fluid flow at different spool travel + 20 bar margin

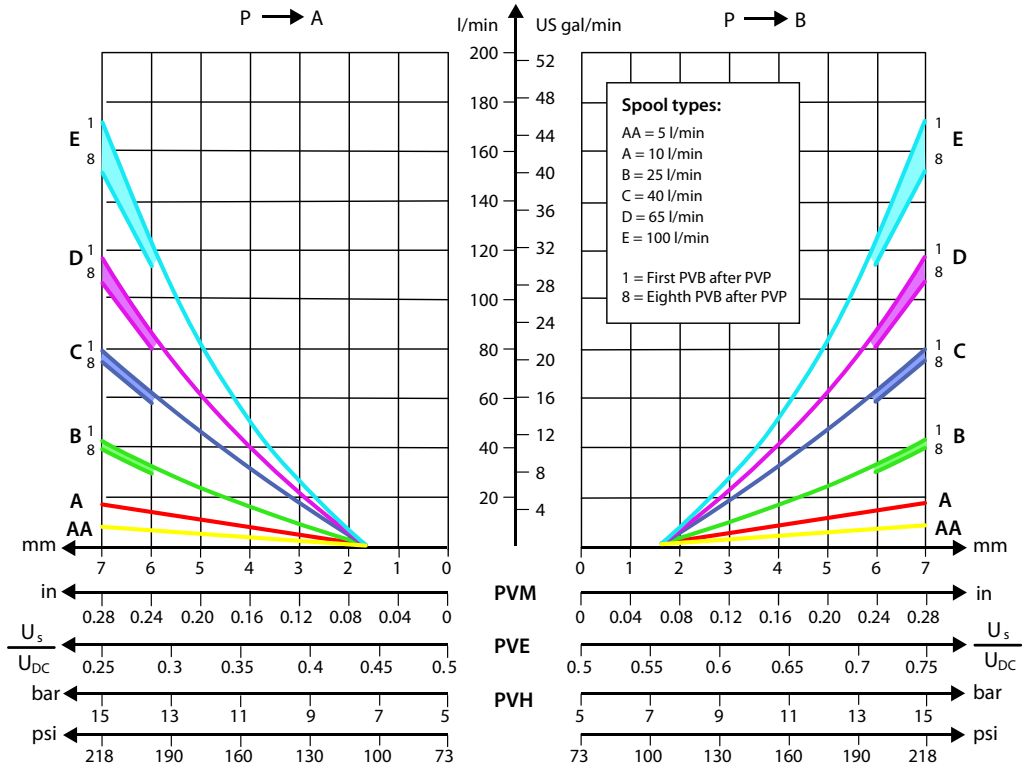

PVBS Main Spools

Progressive fluid flow characteristic depending on spool type

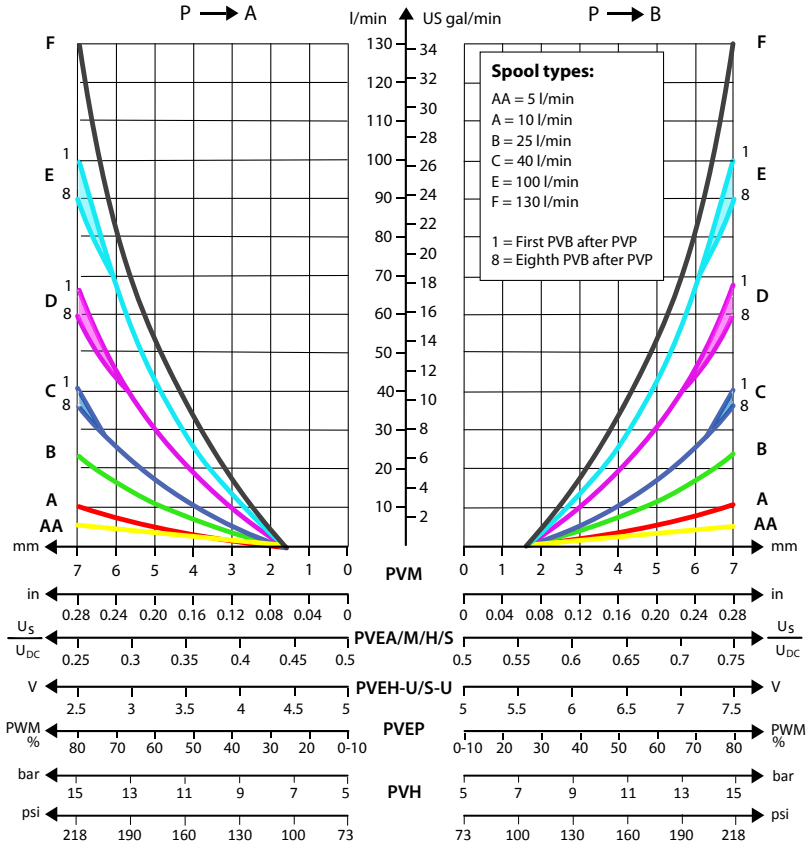

Linear fluid flow characteristic depending on spool type

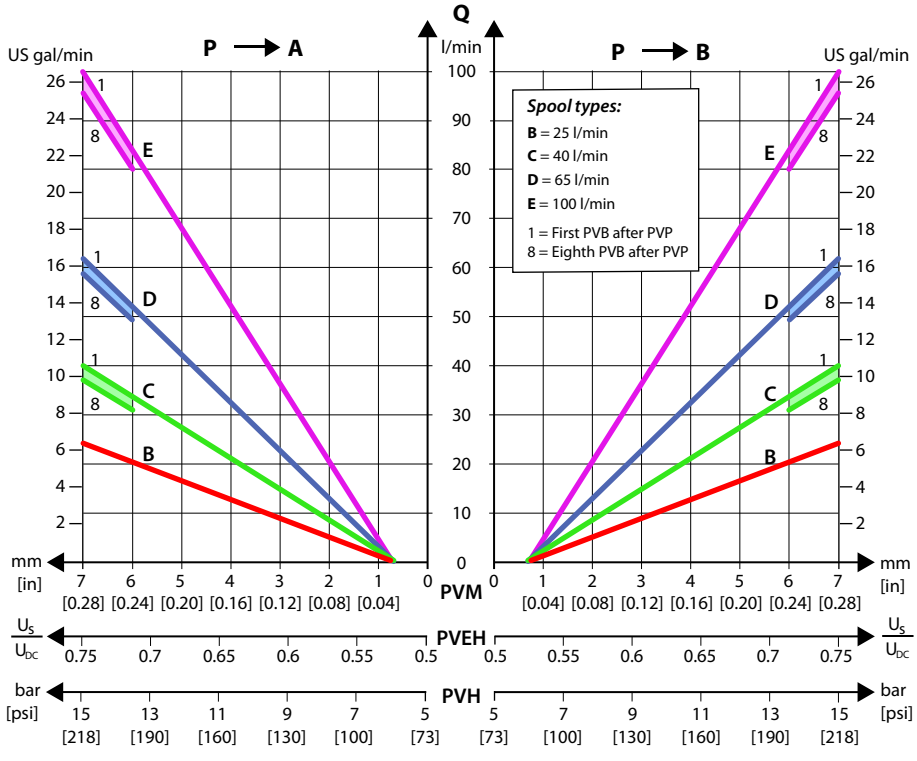

PVBS Main Spools

Progressive fluid flow characteristic of spool with A-float

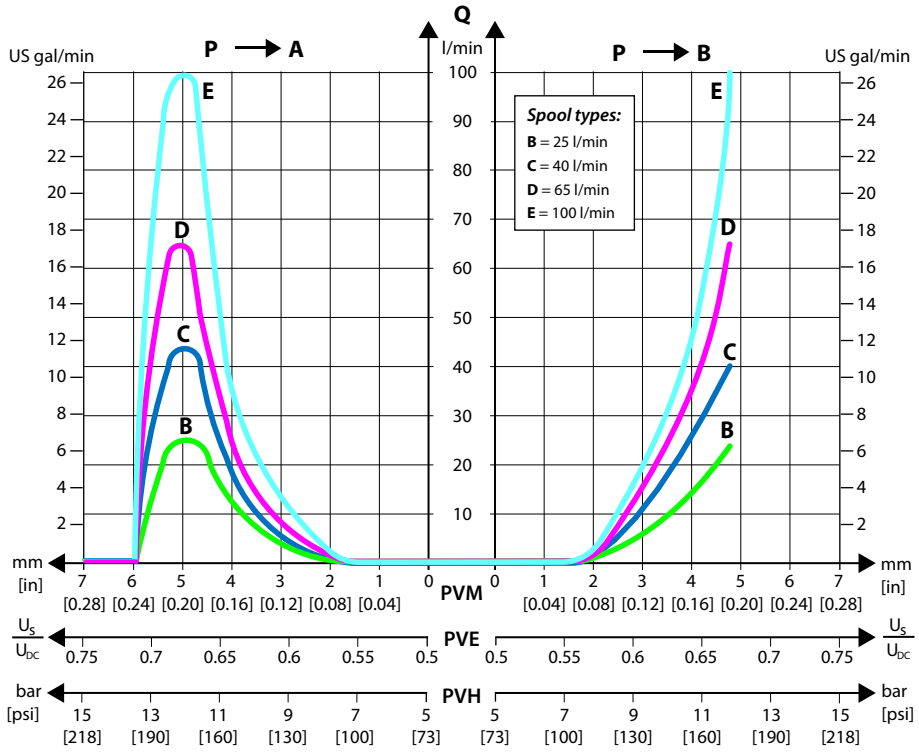

Progressive fluid flow characteristic of spool with B-float

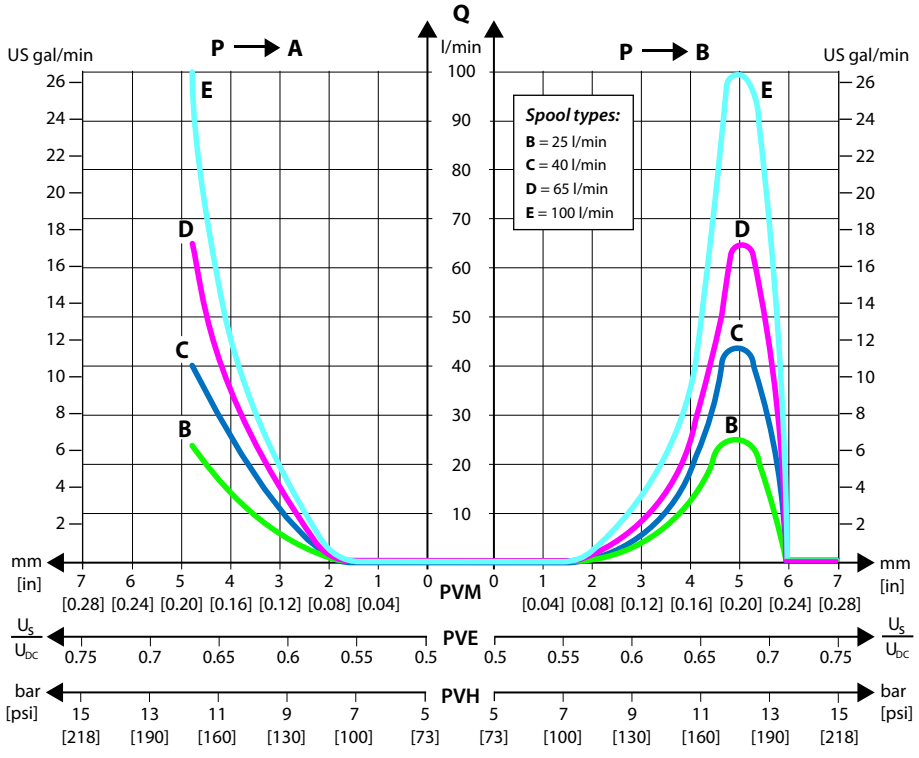

PVBS Main Spools

Pressure drop at maximum spool travel position

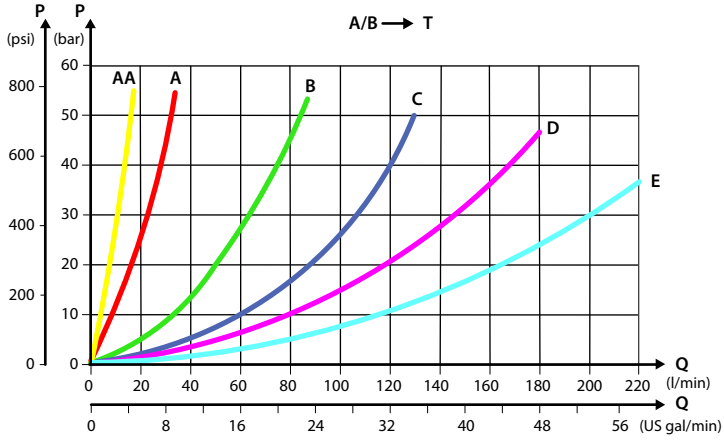

Pressure drop for open spool in neutral position

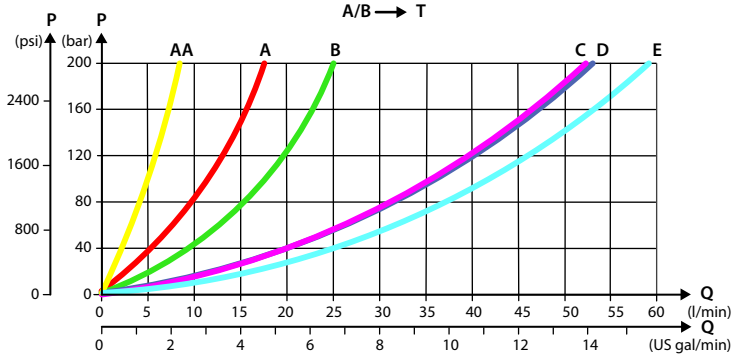

Pressure drop A/B to T in float position

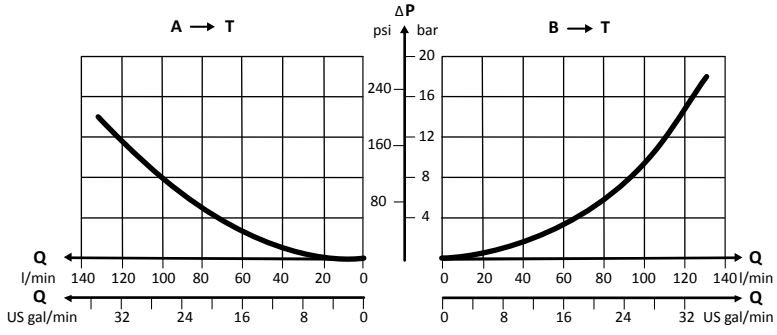

PVBS Main Spools Part Numbers

Flow Control Spools—Closed Neutral Position

Schematic for PVBS without shuttle valve

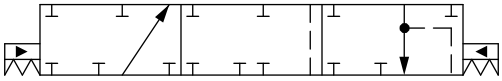

Schematic for PVBS with shuttle valve

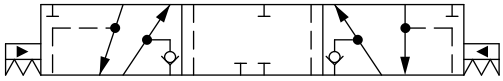

Part numbers for Symmetric Flow Control Spools

Part Number	Actuation	PVB with shuttle valve	Flow – l/min [US gal/min]			
			A → T	P → A	P → B	B → T
157B9672	PVE	-	1 [0,26]	1 [0,26]	1 [0,26]	1 [0,26]
157B7005	PVE	-	5 [1,3]	5 [1,3]	5 [1,3]	5 [1,3]
157B9543	PVE	-	10 [2,6]	5 [1,3]	5 [1,3]	10 [2,6]
157B7000	PVE	-	10 [2,6]	10 [2,6]	10 [2,6]	10 [2,6]
157B9509	PVE	-	15 [4,0]	15 [4,0]	15 [4,0]	15 [4,0]
157B7001	PVE	-	25 [6,6]	25 [6,6]	25 [6,6]	25 [6,6]
157B7002	PVE	-	40 [10,6]	40 [10,6]	40 [10,6]	40 [10,6]
157B9903	PVE	-	50 [13,2]	50 [13,2]	50 [13,2]	50 [13,2]
157B7003	PVE	-	65 [17,2]	65 [17,2]	65 [17,2]	65 [17,2]
157B9920	PVE	-	75 [19,8]	75 [19,8]	75 [19,8]	130 [34,3]
157B7004	PVE	-	100 [26,4]	100 [26,4]	100 [26,4]	100 [26,4]
157B9977	PVE	-	100 [26,4]	100 [26,4]	100 [26,4]	130 [34,3]
11140830	PVE	-	100 [26,4]	100 [26,4]	100 [26,4]	130 [34,3]
157B9674	PVE	-	130 [34,3]	100 [26,4]	100 [26,4]	100 [26,4]
157B9503	PVE	-	2)	100 [26,4]	100 [26,4]	100 [26,4]
157B7006[1)]	PVE	-	130 [34,3]	130 [34,3]	130 [34,3]	130 [34,3]
11137391	PVE	Yes	1 [0,26]	1 [0,26]	1 [0,26]	1 [0,26]
157B7025	PVE	Yes	5 [1,3]	5 [1,3]	5 [1,3]	5 [1,3]
157B7020	PVE	Yes	10 [2,6]	10 [2,6]	10 [2,6]	10 [2,6]
157B7021	PVE	Yes	25 [6,6]	25 [6,6]	25 [6,6]	25 [6,6]
157B7022	PVE	Yes	40 [10,6]	40 [10,6]	40 [10,6]	40 [10,6]
157B7023	PVE	Yes	65 [17,2]	65 [17,2]	65 [17,2]	65 [17,2]
11223875	PVE	Yes	65 [17,2]	65 [17,2]	65 [17,2]	65 [17,2]
11212900	PVE	Yes	80 [21.1]	80 [21.1]	80 [21.1]	80 [21.1]
157B7024	PVE	Yes	100 [26,4]	100 [26,4]	100 [26,4]	100 [26,4]
157B7026[1)]	PVE	Yes	130 [34,3]	130 [34,3]	130 [34,3]	130 [34,3]
11201284	PVE	Yes	130 [34,3]	130 [34,3]	130 [34,3]	130 [34,3]
157B9005	PVH/PVHC	-	5 [1,3]	5 [1,3]	5 [1,3]	5 [1,3]
157B9000	PVH/PVHC	-	10 [2,6]	10 [2,6]	10 [2,6]	10 [2,6]
11225674	PVH/PVHC	-	15 [4,0]	15 [4,0]	15 [4,0]	15 [4,0]
157B9001	PVH/PVHC	-	25 [6,6]	25 [6,6]	25 [6,6]	25 [6,6]
157B9002	PVH/PVHC	-	40 [10,6]	40 [10,6]	40 [10,6]	40 [10,6]
157B9003	PVH/PVHC	-	65 [17,2]	65 [17,2]	65 [17,2]	65 [17,2]

PVBS Main Spools Part Numbers

Part numbers for Symmetric Flow Control Spools (continued)

Part Number	Actuation	PVB with shuttle valve	Flow – l/min [US gal/min]			
			A → T	P → A	P → B	B → T
157B9816	PVH/PVHC	-	75 [19,8]	75 [19,8]	75 [19,8]	130 [34,3]
157B9004	PVH/PVHC	-	100 [26,4]	100 [26,4]	100 [26,4]	100 [26,4]
157B9006[1)]	PVH/PVHC	-	130 [34,3]	130 [34,3]	130 [34,3]	130 [34,3]
157B9025	PVH/PVHC	Yes	5 [1,3]	5 [1,3]	5 [1,3]	5 [1,3]
157B9020	PVH/PVHC	Yes	10 [2,6]	10 [2,6]	10 [2,6]	10 [2,6]
11122055	PVH/PVHC	Yes	15 [4,0]	15 [4,0]	15 [4,0]	15 [4,0]
157B9021	PVH/PVHC	Yes	25 [6,6]	25 [6,6]	25 [6,6]	25 [6,6]
157B9022	PVH/PVHC	Yes	40 [10,6]	40 [10,6]	40 [10,6]	40 [10,6]
157B9023	PVH/PVHC	Yes	65 [17,2]	65 [17,2]	65 [17,2]	65 [17,2]
11196171	PVH/PVHC	Yes	*	90 [23,8]	90 [23,8]	*
157B9024	PVH/PVHC	Yes	100 [26,4]	100 [26,4]	100 [26,4]	100 [26,4]
157B9026[1)]	PVH/PVHC	Yes	130 [34,3]	130 [34,3]	130 [34,3]	130 [34,3]

[2)] Fully opened, no flow restriction notch.

[1)] Turbo on A-port.

Part numbers for Asymmetric Flow Control Spools

Part Number	Actuation	PVB with shuttle valve	Flow – l/min [US gal/min]			
			A → T	P → A	P → B	B → T
157B9524	PVE	-	5 [1,3]	5 [1,3]	10 [2,6]	10 [2,6]
11004213	PVE	-	5 [1,3]	5 [1,3]	65 [17,2]	65 [17,2]
157B9092	PVE	-	10 [2,6]	10 [2,6]	5 [1,3]	5 [1,3]
157B9514	PVE	-	10 [2,6]	10 [2,6]	15 [4,0]	15 [4,0]
157B9579	PVE	-	10 [2,6]	10 [2,6]	65 [17,2]	65 [17,2]
157B9579	PVE	-	65 [17,2]	10 [2,6]	65 [17,2]	65 [17,2]
157B9856	PVE	-	15 [4,0]	15 [4,0]	10 [2,6]	10 [2,6]
157B9516	PVE	-	15 [4,0]	15 [4,0]	10 [2,6]	10 [2,6]
11137748	PVE	-	20 [5,3]	20 [5,3]	15 [4,0]	15 [4,0]
157B9515	PVE	-	20 [5,3]	20 [5,3]	25 [6,6]	25 [6,6]
157B9950	PVE	-	25 [6,6]	25 [6,6]	10 [2,6]	10 [2,6]
11130056	PVE	-	25 [6,6]	25 [6,6]	15 [4,0]	15 [4,0]
157B9975	PVE	-	100 [26,4]	25 [6,6]	100 [26,4]	100 [26,4]
11119792	PVE	-	40 [10,6]	40 [10,6]	25 [6,6]	25 [6,6]
11022810	PVE	-	65 [17,2]	65 [17,2]	40 [10,6]	40 [10,6]
157B9566	PVE	-	65 [17,2]	65 [17,2]	10 [2,6]	10 [2,6]
11119557	PVE	-	75 [19,8]	75 [19,8]	65 [17,2]	65 [17,2]
157B9947	PVE	Yes	5 [1,3]	5 [1,3]	25 [6,6]	25 [6,6]
157B9555	PVE	Yes	7 [1,8]	7 [1,8]	10 [2,6]	10 [2,6]
11212898	PVE	Yes	10 [2,6]	10 [2,6]	5 [1,3]	5 [1,3]

PVBS Main Spools Part Numbers

Part numbers for Asymmetric Flow Control Spools (continued)

Part Number	Actuation	PVB with shuttle valve	Flow – l/min [US gal/min]			
			A → T	P → A	P → B	B → T
157B9915	PVE	Yes	15 [4,0]	15 [4,0]	35 [9,2]	35 [9,2]
11088763	PVE	Yes	25 [6,6]	25 [6,6]	40 [10,6]	40 [10,6]
11078499	PVE	Yes	40 [10,6]	25 [6,6]	40 [10,6]	40 [10,6]
157B9810	PVE	Yes	30 [7,9]	30 [7,9]	20 [5,3]	20 [5,3]
11015763	PVE	Yes	40 [10,6]	40 [10,6]	25 [6,6]	25 [6,6]
11015765	PVE	Yes	40 [10,6]	40 [10,6]	65 [17,2]	65 [17,2]
11216150	PVE	Yes	40 [10,6]	40 [10,6]	65 [17,2]	65 [17,2]
157B9907	PVE	Yes	50 [13,2]	50 [13,2]	5 [1,3]	5 [1,3]
157B9828	PVE	Yes	65 [17,2]	65 [17,2]	40 [10,6]	40 [10,6]
11021888	PVE	Yes	65 [17,2]	65 [17,2]	40 [10,6]	65 [17,2]
11216162	PVE	Yes	65 [17,2]	65 [17,2]	100 [26,4]	100 [26,4]
11036502	PVE	Yes	100 [26,4]	100 [26,4]	65 [17,2]	65 [17,2]
157B9857[1)]	PVE	Yes	130 [34,3]	130 [34,3]	65 [17,2]	65 [17,2]
11119552	PVH/PVHC	-	15 [4,0]	15 [4,0]	10 [2,6]	10 [2,6]
11066371	PVH/PVHC	-	20 [5,3]	20 [5,3]	15 [4,0]	15 [4,0]
11130928	PVH/PVHC	-	25 [6,6]	25 [6,6]	15 [4,0]	15 [4,0]
11130924	PVH/PVHC	-	40 [10,6]	40 [10,6]	25 [6,6]	25 [6,6]
11130831	PVH/PVHC	-	75 [19,8]	75 [19,8]	65 [17,2]	65 [17,2]
11094986	PVH/PVHC	-	[2)]	100 [26,4]	100 [26,4]	[2)]
11219179	PVH/PVHC	Yes	40 [10,6]	40 [10,6]	25 [6,6]	25 [6,6]
157B9084	PVH/PVHC	Yes	50 [13,2]	50 [13,2]	5 [1,3]	5 [1,3]
11145741[1)]	PVH/PVHC	Yes	130 [34,3]	130 [34,3]	65 [17,2]	65 [17,2]
11145955	PVH/PVHC	Yes	150 [39,6]	60 [15,9]	90 [23,8]	150 [39,6]

[1)] Turbo on A-port.

[2)] Fully open, no flow restriction notch.

Part numbers for Back pressure Flow Control Spools (A/B->T flow track smaller than P->A/B)

Part Number	Actuation	PVB with shuttle valve	Flow – l/min [US gal/min]			
			A → T	P → A	P → B	B → T
11124636	PVE	-	40 [10,6]	65 [17,2]	65 [17,2]	40 [10,6]
11084778	PVE	-	2 [0,53]	10 [2,6]	10 [2,6]	5 [1,3]
11104114	PVE	-	3 [0,79]	10 [2,6]	15 [4,0]	5 [1,3]
11075794	PVE	-	5 [1,3]	10 [2,6]	5 [1,3]	10 [2,6]
11098883	PVE	-	5 [1,3]	10 [2,6]	10 [2,6]	2 [0,53]
11104452	PVE	-	5 [1,3]	15 [4,0]	10 [2,6]	3 [0,79]
157B9633	PVE	-	5 [1,3]	25 [6,6]	25 [6,6]	5 [1,3]
11098881	PVE	-	5 [1,3]	25 [6,6]	25 [6,6]	25 [6,6]
11126414	PVE	-	10 [2,6]	25 [6,6]	25 [6,6]	25 [6,6]

PVBS Main Spools Part Numbers

Part numbers for Back pressure Flow Control Spools (A/B->T flow track smaller than P->A/B) (continued)

Part Number	Actuation	PVB with shuttle valve	Flow – l/min [US gal/min]			
			A → T	P → A	P → B	B → T
11129522	PVE	-	10 [2,6]	25 [6,6]	50 [13,2]	25 [6,6]
157B9952	PVE	-	25 [6,6]	38 [10,0]	38 [10,0]	25 [6,6]
157B9635	PVE	-	10 [2,6]	40 [10,6]	40 [10,6]	25 [6,6]
11129523	PVE	-	10 [2,6]	40 [10,6]	50 [13,2]	40 [10,6]
157B9638	PVE	-	25 [6,6]	40 [10,6]	40 [10,6]	25 [6,6]
157B9818	PVE	-	40 [10,6]	55 [14,5]	55 [14,5]	40 [10,6]
11022164	PVE	-	10 [2,6]	65 [17,2]	65 [17,2]	10 [2,6]
157B9634	PVE	-	25 [6,6]	65 [17,2]	65 [17,2]	25 [6,6]
157B9931	PVE	-	40 [10,6]	65 [17,2]	65 [17,2]	65 [17,2]
157B9551	PVE	-	65 [17,2]	65 [17,2]	65 [17,2]	10 [2,6]
157B9978	PVE	-	100 [26,4]	65 [17,2]	100 [26,4]	40 [10,6]
157B9976	PVE	-	40 [10,6]	100 [26,4]	65 [17,2]	100 [26,4]
157B9541	PVE	-	40 [10,6]	100 [26,4]	65 [17,2]	*
157B9949	PVE	-	40 [10,6]	100 [26,4]	100 [26,4]	100 [26,4]
157B9932	PVE	-	100 [26,4]	100 [26,4]	100 [26,4]	40 [10,6]
11129528	PVE	Yes	5 [1,3]	15 [4,0]	20 [5,3]	10 [2,6]
157B9827	PVE	Yes	10 [2,6]	20 [5,3]	20 [5,3]	10 [2,6]
157B9863	PVE	Yes	5 [1,3]	25 [6,6]	25 [6,6]	5 [1,3]
11100489	PVE	Yes	5 [1,3]	25 [6,6]	40 [10,6]	20 [5,3]
157B9946	PVE	Yes	25 [6,6]	25 [6,6]	10 [2,6]	10 [2,6]
157B9858	PVE	Yes	10 [2,6]	40 [10,6]	40 [10,6]	10 [2,6]
157B9639	PVE	Yes	25 [6,6]	40 [10,6]	40 [10,6]	25 [6,6]
157B9906	PVE	Yes	30 [7,9]	40 [10,6]	15 [4,0]	20 [5,3]
157B9632	PVE	Yes	25 [6,6]	65 [17,2]	65 [17,2]	25 [6,6]
157B9640	PVE	Yes	40 [10,6]	100 [26,4]	65 [17,2]	65 [17,2]
157B9839	PVH/PVHC	-	5 [1,3]	25 [6,6]	25 [6,6]	5 [1,3]
11104487	PVH/PVHC	-	5 [1,3]	25 [6,6]	25 [6,6]	25 [6,6]
11111729	PVH/PVHC	-	25 [6,6]	40 [10,6]	40 [10,6]	25 [6,6]
11074169	PVH/PVHC	-	100 [26,4]	100 [26,4]	100 [26,4]	40 [10,6]
11218880	PVH/PVHC	Yes	5 [1,3]	25 [6,6]	25 [6,6]	5 [1,3]
11119474	PVH/PVHC	Yes	25 [6,6]	40 [10,6]	40 [10,6]	25 [6,6]
11145741	PVH/PVHC	Yes	150 [39,6]	150 [39,6]	150 [39,6]	65 [17,2]

* Fully opened, no flow restriction notch.

PVBS Main Spools Part Numbers

Part numbers for Flow Control Spools for PVML

Part Number	Actuation	PVB with shuttle valve	Flow - l/min [US gal/min]			
			A → T	P → A	P → B	B → T
11088178	PVE	-	65 [17,2]	65 [17,2]	65 [17,2]	65 [17,2]
11076336	PVE	-	100 [26,4]	100 [26,4]	100 [26,4]	100 [26,4]
11075706*	PVE	-	130 [34,3]	130 [34,3]	130 [34,3]	130 [34,3]
11088177	PVE	Yes	100 [26,4]	100 [26,4]	100 [26,4]	100 [26,4]
11145032	PVH/PVHC	Yes	25 [6,6]	25 [6,6]	25 [6,6]	25 [6,6]
11079716	PVH/PVHC	Yes	75 [19,8]	75 [19,8]	75 [19,8]	75 [19,8]
11144181	PVH/PVHC	Yes	90 [23,8]	90 [23,8]	90 [23,8]	90 [23,8]
11145641	PVH/PVHC	Yes	150 [39,6]	150 [39,6]	150 [39,6]	150 [39,6]

* Turbo on A-port.

Flow Control Spools—Closed Neutral Position with A-float

Schematic for PVBS with shuttle valve

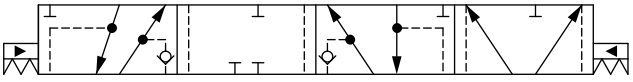

Part numbers for Asymmetric Flow Control Spools

Part Number	Actuation	PVB with shuttle valve	Flow - l/min [US gal/min]			
			A → T	P → A	P → B	B → T
11020293	PVE	Yes	*	100 [26,4]	65 [17,2]	*

* Fully opened, no flow restriction notch

Flow Control Spools—Closed Neutral Position with B-float

Schematic for PVBS with shuttle valve

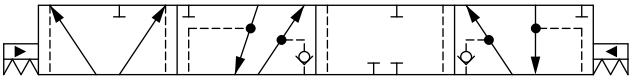

Part numbers for Symmetric Flow Control Spools

Part Number	Actuation	PVB with shuttle valve	Flow - l/min [US gal/min]			
			A → T	P → A	P → B	B → T
157B7620	PVE	Yes	10 [2,6]	10 [2,6]	10 [2,6]	10 [2,6]
157B7621	PVE	Yes	25 [6,6]	25 [6,6]	25 [6,6]	25 [6,6]
157B7622	PVE	Yes	40 [10,6]	40 [10,6]	40 [10,6]	40 [10,6]
157B7623	PVE	Yes	65 [17,2]	65 [17,2]	65 [17,2]	65 [17,2]
157B7624[1]	PVE	Yes	100 [26,4]	100 [26,4]	100 [26,4]	100 [26,4]
157B9620	PVH/PVHC	Yes	10 [2,6]	10 [2,6]	10 [2,6]	10 [2,6]
157B9636	PVH/PVHC	Yes	25 [6,6]	25 [6,6]	25 [6,6]	25 [6,6]

PVBS Main Spools Part Numbers

Part numbers for Symmetric Flow Control Spools (continued)

Part Number	Actuation	PVB with shuttle valve	Flow - l/min [US gal/min]			
			A → T	P → A	P → B	B → T
11051805	PVH/PVHC	Yes	65 [17,2]	65 [17,2]	65 [17,2]	65 [17,2]
11085501[1]	PVH/PVHC	Yes	100 [26,4]	100 [26,4]	100 [26,4]	100 [26,4]

[1] Turbo on A and B port.

Part numbers for Asymmetric Flow Control Spools

Part Number	Actuation	PVB with shuttle valve	Flow - l/min [US gal/min]			
			A → T	P → A	P → B	B → T
157B9911	PVE	Yes	30 [7,9]	30 [7,9]	65 [17,2]	65 [17,2]
157B9518[1]	PVE	Yes	100 [26,4]	100 [26,4]	65 [17,2]	100 [26,4]

[1] Turbo on A port.

Part numbers for Back pressure Flow Control Spools (A/B->T flow track smaller than P->A/B)

Part Number	Actuation	PVB with shuttle valve	Flow - l/min [US gal/min]			
			A → T	P → A	P → B	B → T
11129529	PVE	Yes	3 [0,8]	10 [2,6]	13 [3,4]	5 [1,3]
157B9691	PVE	Yes	15 [4,0]	30 [7,9]	30 [7,9]	15 [4,0]
157B9692	PVE	Yes	25 [6,6]	50 [13,2]	65 [17,2]	65 [17,2]
157B9941[1]	PVE	Yes	100 [26,4]	130 [34,3]	130 [34,3]	130 [34,3]
157B9691	PVH/PVHC	Yes	15 [4,0]	30 [7,9]	30 [7,9]	15 [4,0]
157B9692	PVH/PVHC	Yes	25 [6,6]	50 [13,2]	65 [17,2]	65 [17,2]

[1] Turbo on A and B port.

Part number for Flow Control Spools for PVML

Part Number	Actuation	PVB with shuttle valve	Flow - l/min [US gal/min]			
			A → T	P → A	P → B	B → T
11145032	PVH/PVHC	Yes	150 [39.6]	110 [29.1]	5 [19.8]	70 [18.5]

PVBS Main Spools Part Numbers

Flow Control Spools—Closed Neutral Position with A-float for PVMF

Schematic for PVBS with shuttle valve

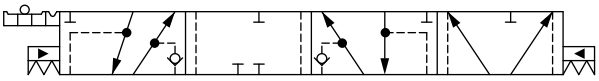

Part numbers for Symmetric Flow Control Spools

Part Number	Actuation	PVB with shuttle valve	Flow - l/min [US gal/min]			
			A → T	P → A	P → B	B → T
157B9825	PVE	Yes	5 [1,3]	5 [1,3]	5 [1,3]	5 [1,3]
157B9820	PVE	Yes	10 [2,6]	10 [2,6]	10 [2,6]	10 [2,6]
157B9821	PVE	Yes	25 [6,6]	25 [6,6]	25 [6,6]	25 [6,6]
157B9822	PVE	Yes	40 [10,6]	40 [10,6]	40 [10,6]	40 [10,6]
157B9823	PVE	Yes	65 [17,2]	65 [17,2]	65 [17,2]	65 [17,2]
157B9824[1)]	PVE	Yes	100 [26,4]	100 [26,4]	100 [26,4]	100 [26,4]

[1)] Turbo on A and B port.

Flow Control Spools—Closed Neutral Position with B-float for PVMF

Schematic for PVBS with shuttle valve

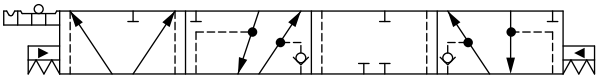

Part numbers for Symmetric Flow Control Spools

Part Number	Actuation	PVB with shuttle valve	Flow - l/min [US gal/min]			
			A → T	P → A	P → B	B → T
157B9821	PVE	Yes	25 [6,6]	25 [6,6]	25 [6,6]	25 [6,6]
157B9822	PVE	Yes	40 [10,6]	40 [10,6]	40 [10,6]	40 [10,6]
157B9823	PVE	Yes	65 [17,2]	65 [17,2]	65 [17,2]	65 [17,2]
157B9824[1)]	PVE	Yes	100 [26,4]	100 [26,4]	100 [26,4]	100 [26,4]

[1)] Turbo on A and B port.

PVBS Main Spools Part Numbers

Flow Control Spools—Closed Neutral Position for PVMR

Schematic for PVBS without shuttle valve

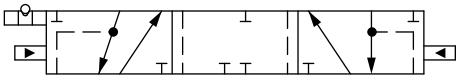

Schematic for PVBS with shuttle valve

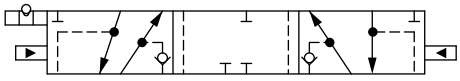

Part numbers for Symmetric Flow Control Spools

Part Number	Actuation	PVB with shuttle valve	Flow – l/min [US gal/min]			
			A → T	P → A	P → B	B → T
157B9705	PVE	-	5 [1,3]	5 [1,3]	5 [1,3]	5 [1,3]
157B9700	PVE	-	10 [2,6]	10 [2,6]	10 [2,6]	10 [2,6]
11095634	PVE	-	15 [4,0]	15 [4,0]	15 [4,0]	15 [4,0]
157B9701	PVE	-	25 [6,6]	25 [6,6]	25 [6,6]	25 [6,6]
157B9702	PVE	-	40 [10,6]	40 [10,6]	40 [10,6]	40 [10,6]
157B9703	PVE	-	65 [17,2]	65 [17,2]	65 [17,2]	65 [17,2]
157B9704	PVE	-	100 [26,4]	100 [26,4]	100 [26,4]	100 [26,4]
157B9725	PVE	Yes	5 [1,3]	5 [1,3]	5 [1,3]	5 [1,3]
157B9720	PVE	Yes	10 [2,6]	10 [2,6]	10 [2,6]	10 [2,6]
157B9721	PVE	Yes	25 [6,6]	25 [6,6]	25 [6,6]	25 [6,6]
157B9722	PVE	Yes	40 [10,6]	40 [10,6]	40 [10,6]	40 [10,6]
157B9723	PVE	Yes	65 [17,2]	65 [17,2]	65 [17,2]	65 [17,2]
157B9724	PVE	Yes	100 [26,4]	100 [26,4]	100 [26,4]	100 [26,4]

Flow Control Spools—Open/Closed Neutral Position

Schematic for PVBS without shuttle valve

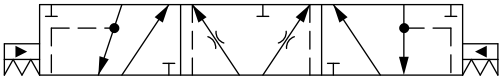

Schematic for PVBS with shuttle valve

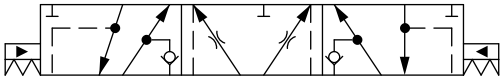

Part numbers for Symmetric Flow Control Spools

Part Number	Actuation	PVB with shuttle valve	Flow – l/min [US gal/min]			
			A → T	P → A	P → B	B → T
157B7101	PVE	-	25 [6,6]	25 [6,6]	25 [6,6]	25 [6,6]
157B9537	PVE	-	40 [10,6]	40 [10,6]	40 [10,6]	65 [10,6]
157B7103	PVE	-	65 [17,2]	65 [17,2]	65 [17,2]	65 [17,2]
11100878	PVE	Yes	35 [9,2]	35 [9,2]	35 [9,2]	35 [9,2]
11027254	PVE	Yes	75 [19,8]	75 [19,8]	75 [19,8]	75 [19,8]

PVBS Main Spools Part Numbers

Part numbers for Asymmetric Flow Control Spools

Part Number	Actuation	PVB with shuttle valve	Flow – l/min [US gal/min]			
			A → T	P → A	P → B	B → T
157B9698	PVE	Yes	15 [4,0]	15 [4,0]	10 [2,6]	10 [2,6]
11055532	PVE	Yes	35 [9,2]	35 [9,2]	65 [17,2]	65 [17,2]
11025812	PVE	Yes	50 [13,2]	50 [13,2]	75 [19,8]	75 [19,8]

Back pressure Flow Control Spools (A/B->T flow track smaller than P->A/B)

Part Number	Actuation	PVB with shuttle valve	Flow – l/min [US gal/min]			
			A → T	P → A	P → B	B → T
11094317	PVE	Yes	2 [0,5]	5 [1,3]	5 [1,3]	2 [0,5]
11051992	PVE	Yes	5 [1,3]	18 [4,8]	18 [4,8]	5 [1,3]
11027284	PVE	Yes	6 [1,6]	25 [6,6]	25 [6,6]	6 [1,6]
11117573	PVE	Yes	25 [6,6]	35 [9,2]	65 [17,2]	65 [17,2]
11025212	PVE	Yes	35 [9,2]	35 [9,2]	18 [4,8]	12 [3,2]
11137744	PVE	Yes	35 [9,2]	50 [13,2]	75 [19,8]	75 [19,8]
11027911	PVE	Yes	65 [17,2]	65 [17,2]	35 [9,2]	25 [6,6]
11027922	PVE	Yes	75 [19,8]	75 [19,8]	50 [13,2]	35 [9,2]

Flow Control Spools—Open/Closed A and Closed B Position

Schematic for PVBS with shuttle valve

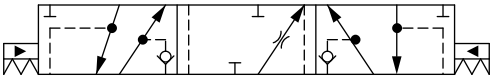

Part numbers for Symmetric Flow Control Spools

Part Number	Actuation	PVB with shuttle valve	Flow – l/min [US gal/min]			
			A → T	P → A	P → B	B → T
11213583	PVE	Yes	100 [26.4]	100 [26.4]	100 [26.4]	100 [26.4]

Part numbers for Asymmetric Flow Control Spools

Part Number	Actuation	PVB with shuttle valve	Flow – l/min [US gal/min]			
			A → T	P → A	P → B	B → T
11201798	PVE	Yes	100 [26.4]	100 [26.4]	65 [17.2]	65 [17.2]

PVBS Main Spools Part Numbers

Flow Control Spools—Throttled Open Neutral Position

Schematic for PVBS without shuttle valve

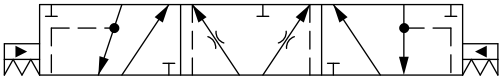

Schematic for PVBS with shuttle valve

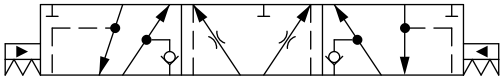

Part numbers for Symmetric Flow Control Spools

Part Number	Actuation	PVB with shuttle valve	Flow – l/min [US gal/min]			
			A → T	P → A	P → B	B → T
157B9697	PVE	-	1 [0,26]	1 [0,26]	1 [0,26]	1 [0,26]
157B7105	PVE	-	5 [1,3]	5 [1,3]	5 [1,3]	5 [1,3]
157B7100	PVE	-	10 [2,6]	10 [2,6]	10 [2,6]	10 [2,6]
157B7101	PVE	-	25 [6,6]	25 [6,6]	25 [6,6]	25 [6,6]
157B9534	PVE	-	25 [6,6]	25 [6,6]	25 [6,6]	40 [6,6]
157B7102	PVE	-	40 [10,6]	40 [10,6]	40 [10,6]	40 [10,6]
157B9537	PVE	-	40 [10,6]	40 [10,6]	40 [10,6]	65 [10,6]
11091340	PVE	-	3)	40 [10,6]	40 [10,6]	3)
157B9521	PVE	-	3)	40 [10,6]	40 [10,6]	3)
157B9677	PVE	-	50 [13,2]	50 [13,2]	50 [13,2]	50 [13,2]
157B7103	PVE	-	65 [17,2]	65 [17,2]	65 [17,2]	65 [17,2]
11007176	PVE	-	3)	65 [17,2]	65 [17,2]	3)
11122809	PVE	-	75 [19,8]	75 [19,8]	75 [19,8]	75 [19,8]
157B7104	PVE	-	100 [26,4]	100 [26,4]	100 [26,4]	100 [26,4]
11144269	PVE	-	100 [26,4]	100 [26,4]	100 [26,4]	3)
157B9098[2)]	PVE	-	130 [34,3]	130 [34,3]	130 [34,3]	130 [34,3]
157B7106[1)]	PVE	-	130 [34,3]	130 [34,3]	130 [34,3]	130 [34,3]
157B9675	PVE	Yes	3 [0,8]	3 [0,8]	3 [0,8]	3 [0,8]
157B7125	PVE	Yes	5 [1,3]	5 [1,3]	5 [1,3]	5 [1,3]
157B7120	PVE	Yes	10 [2,6]	10 [2,6]	10 [2,6]	10 [2,6]
157B9647	PVE	Yes	15 [4,0]	15 [4,0]	15 [4,0]	15 [4,0]
157B9594	PVE	Yes	20 [5,3]	20 [5,3]	20 [5,3]	20 [5,3]
157B7121	PVE	Yes	25 [6,6]	25 [6,6]	25 [6,6]	25 [6,6]
11029379	PVE	Yes	25 [6,6]	25 [6,6]	25 [6,6]	25 [6,6]
11153790	PVE	Yes	3)	25 [6,6]	25 [6,6]	3)
157B7122	PVE	Yes	40 [10,6]	40 [10,6]	40 [10,6]	40 [10,6]
157B9538	PVE	Yes	40 [10,6]	40 [10,6]	40 [10,6]	40 [10,6]
11121691	PVE	Yes	65 [17,2]	65 [17,2]	65 [17,2]	65 [17,2]
11108808	PVE	Yes	100 [26,4]	100 [26,4]	100 [26,4]	100 [26,4]
157B9649	PVE	Yes	55 [14,5]	55 [14,5]	55 [14,5]	55 [14,5]
157B7123	PVE	Yes	65 [17,2]	65 [17,2]	65 [17,2]	65 [17,2]
157B9650	PVE	Yes	75 [19,8]	75 [19,8]	75 [19,8]	75 [19,8]
11217660	PVE	Yes	*	90	90	*

PVBS Main Spools Part Numbers

Part numbers for Symmetric Flow Control Spools (continued)

Part Number	Actuation	PVB with shuttle valve	Flow – l/min [US gal/min]			
			A → T	P → A	P → B	B → T
157B9930[2)]	PVE	Yes	100 [26,4]	100 [26,4]	100 [26,4]	100 [26,4]
157B7124	PVE	Yes	100 [26,4]	100 [26,4]	100 [26,4]	100 [26,4]
11122118	PVE	Yes	[3)]	100 [26,4]	100 [26,4]	[3)]
11142634[2)]	PVE	Yes	130 [34,3]	130 [34,3]	130 [34,3]	130 [34,3]
157B7126[1)]	PVE	Yes	130 [34,3]	130 [34,3]	130 [34,3]	130 [34,3]
157B9854[1)]	PVE	Yes	130 [34,3]	130 [34,3]	130 [34,3]	[3)]
157B9105	PVH/PVHC	-	5 [1,3]	5 [1,3]	5 [1,3]	5 [1,3]
157B9100	PVH/PVHC	-	10 [2,6]	10 [2,6]	10 [2,6]	10 [2,6]
157B9101	PVH/PVHC	-	25 [6,6]	25 [6,6]	25 [6,6]	25 [6,6]
157B9102	PVH/PVHC	-	40 [10,6]	40 [10,6]	40 [10,6]	40 [10,6]
157B9103	PVH/PVHC	-	65 [17,2]	65 [17,2]	65 [17,2]	65 [17,2]
157B9104	PVH/PVHC	-	100 [26,4]	100 [26,4]	100 [26,4]	100 [26,4]
157B9106[1)]	PVH/PVHC	-	130 [34,3]	130 [34,3]	130 [34,3]	130 [34,3]
157B9125	PVH/PVHC	Yes	5 [1,3]	5 [1,3]	5 [1,3]	5 [1,3]
157B9120	PVH/PVHC	Yes	10 [2,6]	10 [2,6]	10 [2,6]	10 [2,6]
157B9121	PVH/PVHC	Yes	25 [6,6]	25 [6,6]	25 [6,6]	25 [6,6]
157B9122	PVH/PVHC	Yes	40 [10,6]	40 [10,6]	40 [10,6]	40 [10,6]
157B9123	PVH/PVHC	Yes	65 [17,2]	65 [17,2]	65 [17,2]	65 [17,2]
157B9124[2)]	PVH/PVHC	Yes	100 [26,4]	100 [26,4]	100 [26,4]	100 [26,4]
157B9126[1)]	PVH/PVHC	Yes	130 [34,3]	130 [34,3]	130 [34,3]	130 [34,3]
11201697	PVH/PVHC	Yes	40	40	40	40

[3)] Fully opened, no flow restriction notch

[2)] Dead band 0.8 mm [0.03 in]

[1)] Turbo on A and B port

Part numbers for Asymmetric Flow Control Spools

Part Number	Actuation	PVB with shuttle valve	Flow – l/min [US gal/min]			
			A → T	P → A	P → B	B → T
11004389	PVE	-	5 [1,3]	5 [1,3]	65 [17,2]	65 [17,2]
157B9094	PVE	-	15 [4,0]	15 [4,0]	30 [7,9]	30 [7,9]
157B9544	PVE	-	100 [26,4]	15 [4,0]	25 [6,6]	40 [10,6]
157B9526	PVE	-	30 [7,9]	30 [7,9]	15 [4,0]	15 [4,0]
157B9815	PVE	-	30 [7,9]	30 [7,9]	20 [5,3]	20 [5,3]
157B9545	PVE	-	40 [10,6]	40 [10,6]	15 [4,0]	40 [10,6]
11093116	PVE	-	40 [10,6]	40 [10,6]	20 [5,3]	20 [5,3]
11005204	PVE	-	40 [10,6]	40 [10,6]	65 [17,2]	65 [17,2]
157B9595	PVE	-	40 [10,6]	40 [10,6]	100 [26,4]	100 [26,4]
157B9860	PVE	-	50 [13,2]	50 [13,2]	20 [5,3]	20 [5,3]

PVBS Main Spools Part Numbers

Part numbers for Asymmetric Flow Control Spools (continued)

Part Number	Actuation	PVB with shuttle valve	Flow – l/min [US gal/min]			
			A → T	P → A	P → B	B → T
11091575	PVE	-	55 [14,5]	55 [14,5]	30 [7,9]	30 [7,9]
157B9696	PVE	-	65 [17,2]	65 [17,2]	10 [2,6]	10 [2,6]
157B9506	PVE	-	65 [17,2]	65 [17,2]	40 [10,6]	40 [10,6]
157B9586	PVE	-	65 [17,2]	65 [17,2]	100 [26,4]	100 [26,4]
11137895	PVE	-	*	65 [17,2]	40 [10,6]	*
11122941	PVE	Yes	15 [4,0]	15 [4,0]	100 [26,4]	100 [26,4]
157B9830	PVE	Yes	25 [6,6]	25 [6,6]	40 [10,6]	40 [10,6]
11070681	PVE	Yes	25 [6,6]	25 [6,6]	50 [13,2]	50 [13,2]
11217665	PVE	Yes	25 [6,6]	25 [6,6]	100 [26,4]	100 [26,4]
157B9547	PVE	Yes	40 [10,6]	25 [6,6]	20 [5,3]	40 [10,6]
157B9558	PVE	Yes	30 [7,9]	30 [7,9]	10 [2,6]	10 [2,6]
157B9833	PVE	Yes	30 [7,9]	30 [7,9]	20 [5,3]	20 [5,3]
157B9813	PVE	Yes	30 [7,9]	30 [7,9]	55 [14,5]	55 [14,5]
11100875	PVE	Yes	*	35 [9,2]	18 [4,8]	*
11100881	PVE	Yes	*	35 [9,2]	50 [13,2]	*
157B9567	PVE	Yes	40 [10,6]	40 [10,6]	20 [5,3]	20 [5,3]
157B9865	PVE	Yes	40 [10,6]	40 [10,6]	25 [6,6]	25 [6,6]
11125125	PVE	Yes	40 [10,6]	40 [10,6]	65 [17,2]	65 [17,2]
157B9505	PVE	Yes	40 [10,6]	40 [10,6]	100 [26,4]	100 [26,4]
11096423	PVE	Yes	50 [13,2]	50 [13,2]	65 [17,2]	65 [17,2]
157B9681	PVE	Yes	55 [14,5]	55 [14,5]	30 [7,9]	30 [7,9]
157B9814	PVE	Yes	65 [17,2]	65 [17,2]	40 [10,6]	40 [10,6]
11202615	PVH/PVHC	-	25 [6,6]	25 [6,6]	25 [6,6]	40 [10,6]
157B9847	PVH/PVHC	-	30 [7,9]	30 [7,9]	20 [5,3]	20 [5,3]
157B9546	PVH/PVHC	-	40 [10,6]	25 [6,6]	20 [5,3]	40 [10,6]
157B9686	PVH/PVHC	-	40 [10,6]	30 [7,9]	25 [6,6]	40 [10,6]
157B9685	PVH/PVHC	-	40 [10,6]	40 [10,6]	35 [9,2]	40 [10,6]
157B9498	PVH/PVHC	-	65 [17,2]	65 [17,2]	40 [10,6]	40 [10,6]
11140120	PVH/PVHC	-	*	65 [17,2]	65 [17,2]	*
157B9688	PVH/PVHC	-	100 [26,4]	20 [5,3]	30 [7,9]	40 [10,6]
11079579	PVH/PVHC	Yes	25 [6,6]	25 [6,6]	50 [13,2]	50 [13,2]
11218879	PVH/PVHC	Yes	40 [10,6]	40 [10,6]	15 [4.0]	15 [4.0]
157B9689	PVH/PVHC	Yes	40 [10,6]	30 [7,9]	30 [7,9]	40 [10,6]
11200936	PVH/PVHC	Yes	40 [10,6]	40 [10,6]	25 [6,6]	25 [6,6]
11092123	PVH/PVHC	Yes	40 [10,6]	40 [10,6]	100 [26,4]	100 [26,4]
11147574	PVH/PVHC	Yes	*	65 [17,2]	65 [17,2]	*

PVBS Main Spools Part Numbers

Part numbers for Asymmetric Flow Control Spools (continued)

Part Number	Actuation	PVB with shuttle valve	Flow – l/min [US gal/min]			
			A → T	P → A	P → B	B → T
11200922	PVH/PVHC	Yes	65 [17,2]	65 [17,2]	40 [10,6]	40 [10,6]
11153474	PVH/PVHC	Yes	80 [21,1]	80 [21,1]	65 [17,2]	65 [17,2]

* Fully opened, no flow restriction notch

Back pressure Flow Control Spools (A/B->T flow track smaller than P->A/B)

Part Number	Actuation	PVB with shuttle valve	Flow – l/min [US gal/min]			
			A → T	P → A	P → B	B → T
11034321	PVE	-	3 [0,79]	3 [0,79]	10 [2,6]	1 [0,26]
11074918	PVE	-	5 [1,3]	10 [2,6]	5 [1,3]	10 [2,6]
11006879	PVE	-	25 [6,6]	25 [6,6]	65 [17,2]	25 [6,6]
11097891	PVE	Yes	40 [10,6]	100 [26,4]	40 [10,6]	40 [10,6]
157B9684	PVH/PVHC	-	25 [6,6]	30 [7,9]	30 [7,9]	25 [6,6]
157B9687	PVH/PVHC	-	25 [6,6]	35 [9,2]	35 [9,2]	25 [6,6]

Flow Control Spools for PVML

Part Number	Actuation	PVB with shuttle valve	Flow – l/min [US gal/min]			
			A → T	P → A	P → B	B → T
157B9803	PVE	-	65 [17,2]	65 [17,2]	65 [17,2]	65 [17,2]
11122774	PVE	-	90 [23,8]	90 [23,8]	90 [23,8]	90 [23,8]
157B9802	PVE	-	100 [26,4]	100 [26,4]	100 [26,4]	100 [26,4]

PVBS Main Spools Part Numbers

Flow Control Spools—Throttled Open Neutral Position for PVMR

Schematic for PVBS without shuttle valve

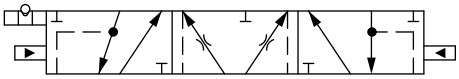

Schematic for PVBS with shuttle valve

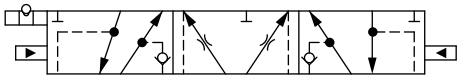

Part numbers for Symmetric Flow Control Spools

Part Number	Actuation	PVB with shuttle valve	Flow – l/min [US gal/min]			
			A → T	P → A	P → B	B → T
157B9715	PVE	-	5 [1,3]	5 [1,3]	5 [1,3]	5 [1,3]
157B9710	PVE	-	10 [2,6]	10 [2,6]	10 [2,6]	10 [2,6]
157B9711	PVE	-	25 [6,6]	25 [6,6]	25 [6,6]	25 [6,6]
157B9712	PVE	-	40 [10,6]	40 [10,6]	40 [10,6]	40 [10,6]
157B9678	PVE	-	50 [13,2]	50 [13,2]	50 [13,2]	50 [13,2]
157B9713	PVE	-	65 [17,2]	65 [17,2]	65 [17,2]	65 [17,2]
11128430	PVE	-	80 [21,1]	80 [21,1]	80 [21,1]	80 [21,1]
157B9714	PVE	-	100 [26,4]	100 [26,4]	100 [26,4]	100 [26,4]
157B9716[1)]	PVE	-	130 [34,3]	130 [34,3]	130 [34,3]	130 [34,3]
157B9735	PVE	Yes	5 [1,3]	5 [1,3]	5 [1,3]	5 [1,3]
157B9730	PVE	Yes	10 [2,6]	10 [2,6]	10 [2,6]	10 [2,6]
157B9731	PVE	Yes	25 [6,6]	25 [6,6]	25 [6,6]	25 [6,6]
157B9732	PVE	Yes	40 [10,6]	40 [10,6]	40 [10,6]	40 [10,6]
157B9733	PVE	Yes	65 [17,2]	65 [17,2]	65 [17,2]	65 [17,2]
157B9734	PVE	Yes	100 [26,4]	100 [26,4]	100 [26,4]	100 [26,4]

[1)] Turbo on A and B port

Part numbers for Asymmetric Flow Control Spools

Part Number	Actuation	PVB with shuttle valve	Flow – l/min [US gal/min]			
			A → T	P → A	P → B	B → T
11107125	PVE	-	5 [1,3]	5 [1,3]	65 [17,2]	65 [17,2]
11119504	PVE	-	40 [10,6]	40 [10,6]	65 [17,2]	65 [17,2]
11071543	PVE	Yes	30 [7,9]	30 [7,9]	10 [2,6]	10 [2,6]

PVBS Main Spools Part Numbers

Flow Control Spools—Throttled A to T Neutral Position

Schematic for PVBS without shuttle valve

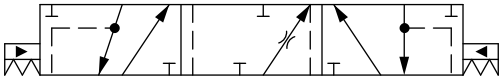

Schematic for PVBS with shuttle valve

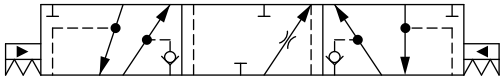

Part numbers for Symmetric Flow Control Spools

Part Number	Actuation	PVB with shuttle valve	Flow – l/min [US gal/min]			
			A → T	P → A	P → B	B → T
157B9504	PVE	-	15 [4,0]	15 [4,0]	15 [4,0]	15 [4,0]
157B7401	PVE	-	25 [6,6]	25 [6,6]	25 [6,6]	25 [6,6]
157B7402	PVE	-	40 [10,6]	40 [10,6]	40 [10,6]	40 [10,6]
157B7403	PVE	-	65 [17,2]	65 [17,2]	65 [17,2]	65 [17,2]
157B7404	PVE	-	100 [26,4]	100 [26,4]	100 [26,4]	100 [26,4]
157B7406[1)]	PVE	-	130 [34,3]	130 [34,3]	130 [34,3]	130 [34,3]
157B9846	PVE	-	[2)]	130 [34,3]	130 [34,3]	130 [34,3]
157B9527	PVE	Yes	15 [4,0]	15 [4,0]	15 [4,0]	15 [4,0]
157B7421	PVE	Yes	25 [6,6]	25 [6,6]	25 [6,6]	25 [6,6]
157B7422	PVE	Yes	40 [10,6]	40 [10,6]	40 [10,6]	40 [10,6]
157B7423	PVE	Yes	65 [17,2]	65 [17,2]	65 [17,2]	65 [17,2]
157B7424	PVE	Yes	100 [26,4]	100 [26,4]	100 [26,4]	100 [26,4]
157B7404	PVH/PVHC	-	100 [26,4]	100 [26,4]	100 [26,4]	100 [26,4]
157B7424	PVH/PVHC	Yes	100 [26,4]	100 [26,4]	100 [26,4]	100 [26,4]

[1)] Turbo on A and B port.

[2)] Fully opened, no flow restriction notch.

Part numbers for Asymmetric Flow Control Spools

Part Number	Actuation	PVB with shuttle valve	Flow – l/min [US gal/min]			
			A → T	P → A	P → B	B → T
11022518	PVE	-	25 [6,6]	25 [6,6]	40 [10,6]	40 [10,6]
157B9834	PVE	-	30 [7,9]	30 [7,9]	20 [5,3]	20 [5,3]
11201797	PVE	Yes	150 [39.6]	150 [39.6]	100 [26,4]	100 [26,4]

PVBS Main Spools Part Numbers

Flow Control Spools—Throttled B to T Neutral Position

Schematic for PVBS without shuttle valve

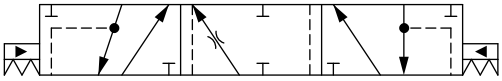

Schematic for PVBS with shuttle valve

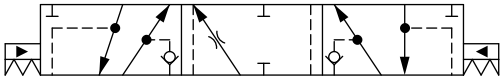

Part numbers for Symmetric Flow Control Spools

Part Number	Actuation	PVB with shuttle valve	Flow – l/min [US gal/min]			
			A → T	P → A	P → B	B → T
157B7500	PVE	-	10 [2,6]	10 [2,6]	10 [2,6]	10 [2,6]
157B7501	PVE	-	25 [6,6]	25 [6,6]	25 [6,6]	25 [6,6]
157B7502	PVE	-	40 [10,6]	40 [10,6]	40 [10,6]	40 [10,6]
157B7503	PVE	-	65 [17,2]	65 [17,2]	65 [17,2]	65 [17,2]
157B7504	PVE	-	100 [26,4]	100 [26,4]	100 [26,4]	100 [26,4]
11064144[1)]	PVE	-	130 [34,3]	130 [34,3]	130 [34,3]	130 [34,3]
157B7520	PVE	Yes	10 [2,6]	10 [2,6]	10 [2,6]	10 [2,6]
157B7521	PVE	Yes	25 [6,6]	25 [6,6]	25 [6,6]	25 [6,6]
157B7522	PVE	Yes	40 [10,6]	40 [10,6]	40 [10,6]	40 [10,6]
157B7523	PVE	Yes	65 [17,2]	65 [17,2]	65 [17,2]	65 [17,2]
157B7524	PVE	Yes	100 [26,4]	100 [26,4]	100 [26,4]	100 [26,4]
11202731	PVH/PVHC	Yes	25 [6,6]	25 [6,6]	25 [6,6]	25 [6,6]

[1)] Turbo on A and B port.

Part numbers for Asymmetric Flow Control Spools

Part Number	Actuation	PVB with shuttle valve	Flow – l/min [US gal/min]			
			A → T	P → A	P → B	B → T
157B9948	PVE	Yes	25 [6,6]	25 [6,6]	10 [2,6]	10 [2,6]
11008038	PVE	Yes	40 [10,6]	40 [10,6]	25 [6,6]	25 [6,6]
11037198	PVE	Yes	100 [26,4]	40 [10,6]	40 [10,6]	40 [10,6]
11126490	PVE	Yes	65 [17,2]	65 [17,2]	40 [10,6]	40 [10,6]

Part numbers for Full open B → T

Part Number	Actuation	PVB with shuttle valve	Flow – l/min [US gal/min]			
			A → T	P → A	P → B	B → T
11131447	PVE	-	10 [2.6]	10 [2.6]	10 [2.6]	10 [2.6]

PVBS Main Spools Part Numbers

Linear Flow Control Spools—Closed Neutral Position

Schematic for PVBS without shuttle valve

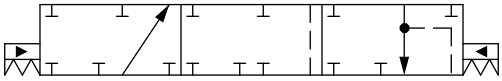

Schematic for PVBS with shuttle valve

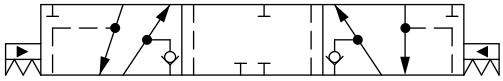

Part numbers for Symmetric Flow Control Spools

Part Number	Actuation	PVB with shuttle valve	Flow – l/min [US gal/min]			
			A → T	P → A	P → B	B → T
157B9770	PVE	Yes	10 [2,6]	10 [2,6]	10 [2,6]	10 [2,6]
157B9771	PVE	Yes	25 [6,6]	25 [6,6]	25 [6,6]	25 [6,6]
157B9511[1)]	PVE	Yes	25 [6,6]	25 [6,6]	25 [6,6]	25 [6,6]
157B9772	PVE	Yes	40 [10,6]	40 [10,6]	40 [10,6]	40 [10,6]
157B9773	PVE	Yes	65 [17,2]	65 [17,2]	65 [17,2]	65 [17,2]
157B9655[1)]	PVE	Yes	85 [17,2]	85 [17,2]	85 [17,2]	85 [17,2]
11073991	PVH/PVHC	-	40 [10,6]	40 [10,6]	40 [10,6]	40 [10,6]
11051903	PVH/PVHC	-	100 [26,4]	100 [26,4]	100 [26,4]	100 [26,4]
11107159	PVH/PVHC	Yes	10 [2,6]	10 [2,6]	10 [2,6]	10 [2,6]
11107222	PVH/PVHC	Yes	40 [10,6]	40 [10,6]	40 [10,6]	40 [10,6]
157B9080	PVH/PVHC	Yes	65 [17,2]	65 [17,2]	65 [17,2]	65 [17,2]
11083650	PVH/PVHC	Yes	[2)]	85 [17,2]	85 [17,2]	[2)]

[1)] Dead band 1,1 mm [0,04 in].

[2)] Fully opened, no flow restriction notch.

Part numbers for Asymmetric Flow Control Spools

Part Number	Actuation	PVB with shuttle valve	Flow – l/min [US gal/min]			
			A → T	P → A	P → B	B → T
157B9086	PVH/PVHC	-	65 [17,2]	65 [17,2]	100 [26,4]	100 [26,4]

Dead band 1,5 mm [0,06 in].

Part number for Back pressure Flow Control Spools (A/B->T flow track smaller than P->A/B)

Part Number	Actuation	PVB with shuttle valve	Flow – l/min [US gal/min]			
			A → T	P → A	P → B	B → T
11151485	PVE	Yes	30 [7.9]	85 [22.5]	110 [29,1]	35 [9.2]

Dead band 0.8 mm [0,03 in].

Part numbers for Flow Control Spools for PVML

Part Number	Actuation	PVB with shuttle valve	Flow - l/min [US gal/min]			
			A → T	P → A	P → B	B → T
11127700	PVH/PVHC	Yes	100 [26.4]	100 [26.4]	100 [26.4]	100 [26.4]

PVBS Main Spools Part Numbers

Linear Flow Control Spools—Throttled Open Neutral Position

Schematic for PVBS without shuttle valve

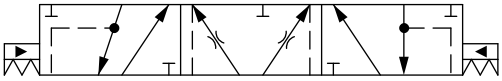

Schematic for PVBS with shuttle valve

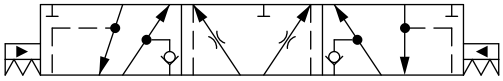

Part numbers for Symmetric Flow Control Spools

Part Number	Actuation	PVB with shuttle valve	Flow – l/min [US gal/min]			
			A → T	P → A	P → B	B → T
11140460	PVE	Yes	5 [1,3]	5 [1,3]	5 [1,3]	5 [1,3]
157B9780	PVE	Yes	10 [2,6]	10 [2,6]	10 [2,6]	10 [2,6]
157B9781	PVE	Yes	25 [6,6]	25 [6,6]	25 [6,6]	25 [6,6]
157B9782	PVE	Yes	40 [10,6]	40 [10,6]	40 [10,6]	40 [10,6]
11076654	PVE	Yes	50 [13,2]	50 [13,2]	50 [13,2]	50 [13,2]
157B9783	PVE	Yes	65 [17,2]	65 [17,2]	65 [17,2]	65 [17,2]
157B9784	PVE	Yes	100 [26,4]	100 [26,4]	100 [26,4]	100 [26,4]
157B9577*	PVE	Yes	130 [34,3]	130 [34,3]	130 [34,3]	130 [34,3]
157B9807	PVH/PVHC	-	10 [2,6]	10 [2,6]	10 [2,6]	10 [2,6]
157B9805	PVH/PVHC	-	25 [6,6]	25 [6,6]	25 [6,6]	25 [6,6]
11046738	PVH/PVHC	-	40 [10,6]	40 [10,6]	40 [10,6]	40 [10,6]
11080984	PVH/PVHC	-	65 [17,2]	65 [17,2]	65 [17,2]	65 [17,2]
11153567	PVH/PVHC	-	100 [26,4]	40 [10,6]	40 [10,6]	100 [26,4]
11218248[1)]	PVH/PVHC	-	130 [34,3]	130 [34,3]	130 [34,3]	130 [34,3]
157B9806	PVH/PVHC	Yes	25 [6,6]	25 [6,6]	25 [6,6]	25 [6,6]
157B9079	PVH/PVHC	Yes	40 [10,6]	40 [10,6]	40 [10,6]	40 [10,6]
157B9081	PVH/PVHC	Yes	65 [17,2]	65 [17,2]	65 [17,2]	65 [17,2]
157B9082	PVH/PVHC	Yes	100 [26,4]	100 [26,4]	100 [26,4]	100 [26,4]
11140180	PVH/PVHC	Yes	[2)]	100 [26,4]	100 [26,4]	[2)]
11216148	PVE	-	*	55 [14,5]	55 [14,5]	*

* Turbo on A and B port

Part numbers for Assymmetric Flow Control Spools

Part Number	Actuation	PVB with shuttle valve	Flow – l/min [US gal/min]			
			A → T	P → A	P → B	B → T
11201830[1)]	PVH/PVHC	-	[2)]	65 [17,2]	65 [17,2]	[2)]

[1)] Dead band 0.8 mm [0,03 in].

[2)] Fully opened, no flow restriction notch

PVBS Main Spools Part Numbers

Flow Control Spools for PVML

Part Number	Actuation	PVB with shuttle valve	Flow – l/min [US gal/min]			
			A → T	P → A	P → B	B → T
11141375	PVE	-	25 [6.6]	25 [6.6]	25 [6.6]	25 [6.6]
11142973	PVH/PVHC	-	100 [26,4]	100 [26,4]	100 [26,4]	100 [26,4]

Linear Flow Control Spools—Open/Closed Neutral Position

Schematic for PVBS without shuttle valve

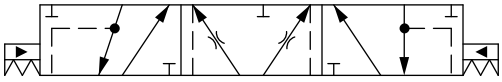

Schematic for PVBS with shuttle valve

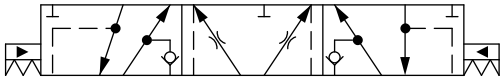

Part numbers for Back pressure Flow Control Spools (A/B->T flow track smaller than P->A/B)

Part Number	Actuation	PVB with shuttle valve	Flow – l/min [US gal/min]			
			A → T	P → A	P → B	B → T
11146795	PVE	Yes	15 [4.0]	40 [10.6]	65 [17.2]	15 [4.0]
11146797	PVE	Yes	15 [4.0]	65 [17.2]	40 [10.6]	10 [2.6]
11151486*	PVE	Yes	20 [5.3]	80 [21.1]	110 [29,1]	40 [10.6]

* Dead band 0.8 mm [0,03 in].

Single Acting Cylinder Flow Control Spools—Neutral A-port Position

Schematic for PVBS without shuttle valve

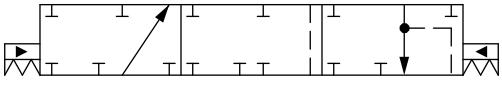

Symmetric flow control spools

Part Number	Actuation	PVB with shuttle valve	Flow – l/min [US gal/min]			
			A → T	P → A	P → B	B → T
11077423	PVE	-	5 [1,3]	5 [1,3]	-	-
157B7200	PVE	-	10 [2,6]	10 [2,6]	-	-
157B7201	PVE	-	25 [6,6]	25 [6,6]	-	-
157B7202	PVE	-	40 [10,6]	40 [10,6]	-	-
157B7203	PVE	-	65 [17,2]	65 [17,2]	-	-
157B7204	PVE	-	100 [26,4]	100 [26,4]	-	-
11015830	PVE	-	130 [34,3]	130 [34,3]	-	-
157B9200	PVH/PVHC	-	10 [2,6]	10 [2,6]	-	-
157B9201	PVH/PVHC	-	25 [6,6]	25 [6,6]	-	-
157B9202	PVH/PVHC	-	40 [10,6]	40 [10,6]	-	-
157B9203	PVH/PVHC	-	65 [17,2]	65 [17,2]	-	-
157B9204	PVH/PVHC	-	100 [26,4]	100 [26,4]	-	-
11085447	PVH/PVHC	-	130 [34,3]	130 [34,3]	-	-

PVBS Main Spools Part Numbers

Back pressure Flow Control Spool (A/B->T flow track smaller than P->A/B)

Part Number	Actuation	PVB with shuttle valve	Flow – l/min [US gal/min]			
			A → T	P → A	P → B	B → T
157B9905	PVE	-	25 [6.6]	65 [17.2]	-	-

PVBS Main Spools Part Numbers

Single Acting Cylinder Flow Control Spools—Neutral B-port Position

Schematic for PVBS without shuttle valve

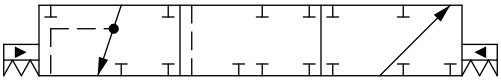

Symmetric flow control spools

Part Number	Actuation	PVB with shuttle valve	Flow – l/min [US gal/min]			
			A → T	P → A	P → B	B → T
157B7300	PVE	-	-	-	10 [2,6]	10 [2,6]
157B7301	PVE	-	-	-	25 [6,6]	25 [6,6]
157B7302	PVE	-	-	-	40 [10,6]	40 [10,6]
157B7303	PVE	-	-	-	65 [17,2]	65 [17,2]
157B7304	PVE	-	-	-	100 [26,4]	100 [26,4]
157B9301	PVH/PVHC	-	-	-	25 [6,6]	25 [6,6]

Back pressure Flow Control Spool (A/B->T flow track smaller than P->A/B)

Part Number	Actuation	PVB with shuttle valve	Flow – l/min [US gal/min]			
			A → T	P → A	P → B	B → T
157B9912	PVE	-	-	-	65 [17,2]	25 [6,6]
11098878	PVE	-	-	-	25 [6,6]	5 [1,3]
11104486	PVH/PVHC	-	-	-	25 [6,6]	5 [1,3]

Single Acting Cylinder Linear Flow Control Spools—Neutral B-port Position

Schematic for PVBS without shuttle valve

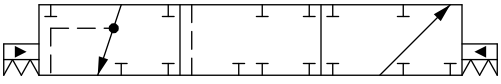

Back pressure Flow Control Spool (A/B->T flow track smaller than P->A/B)

Part Number	Actuation	PVB with shuttle valve	Flow – l/min [US gal/min]			
			A → T	P → A	P → B	B → T
157B9668	PVE	-	-	-	65 [17,2]	40 [10,6]

PVBS Main Spools Part Numbers

Flow/Pressure Control Spools—Closed Neutral Position

All spools have flow control on port A, pressure control on port B and a dead band on 1,5 mm [0,06 in].

Schematic for PVBS without shuttle valve

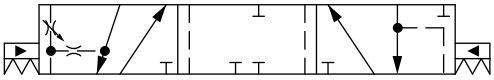

Schematic for PVBS with shuttle valve

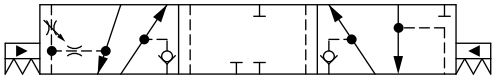

Part numbers for Symmetric PC/FC Spools

Part Number	Actuation	PVB with shuttle valve	Flow – l/min [US gal/min]			
			A → T	P → A	P → B	B → T
157B7050	PVE	-	10 [2,6]	10 [2,6]	10 [2,6]	10 [2,6]
157B7051	PVE	-	25 [6,6]	25 [6,6]	25 [6,6]	25 [6,6]
157B7052	PVE	-	40 [10,6]	40 [10,6]	40 [10,6]	40 [10,6]
157B7053	PVE	-	65 [17,2]	65 [17,2]	65 [17,2]	65 [17,2]
157B7071	PVE	Yes	25 [6,6]	25 [6,6]	25 [6,6]	25 [6,6]
157B7072	PVE	Yes	40 [10,6]	40 [10,6]	40 [10,6]	40 [10,6]
157B7073	PVE	Yes	65 [17,2]	65 [17,2]	65 [17,2]	65 [17,2]
157B7074	PVE	Yes	100 [26,4]	100 [26,4]	100 [26,4]	100 [26,4]
157B9052	PVH/PVHC	-	40 [10,6]	40 [10,6]	40 [10,6]	40 [10,6]
157B9053	PVH/PVHC	-	65 [17,2]	65 [17,2]	65 [17,2]	65 [17,2]
157B9054	PVH/PVHC	-	100 [26,4]	100 [26,4]	100 [26,4]	100 [26,4]
157B9072	PVH/PVHC	Yes	40 [10,6]	40 [10,6]	40 [10,6]	40 [10,6]
157B9073	PVH/PVHC	Yes	65 [17,2]	65 [17,2]	65 [17,2]	65 [17,2]
157B9074	PVH/PVHC	Yes	100 [26,4]	100 [26,4]	100 [26,4]	100 [26,4]

Part numbers for Asymmetric PC/FC Spools

Part Number	Actuation	PVB with shuttle valve	Flow – l/min [US gal/min]			
			A → T	P → A	P → B	B → T
157B9529	PVE	Yes	65 [17,2]	65 [17,2]	40 [10,6]	65 [17,2]

Back pressure PC/FC Spools (A/B->T flow track smaller than P->A/B)

Part Number	Actuation	PVB with shuttle valve	Flow – l/min [US gal/min]			
			A → T	P → A	P → B	B → T
157B9533	PVE	Yes	10 [2,6]	25 [6,6]	5 [1,3]	25 [6,6]
11120728	PVE	Yes	10 [2,6]	40 [10,6]	25 [6,6]	25 [6,6]
157B9536	PVE	Yes	25 [6,6]	40 [10,6]	10 [2,6]	40 [10,6]

Flow/Pressure Control Spools—Throttled Open Neutral Position

All spools have flow control on port A, pressure control on port B and a dead band on 1,5 mm [0,06 in].

Schematic for PVBS without shuttle valve

Schematic for PVBS with shuttle valve

PVBS Main Spools Part Numbers

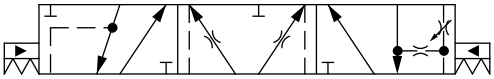

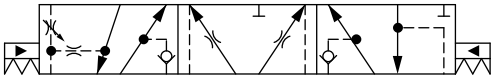

Part numbers for Symmetric FC/PC Control Spools

Part Number	Actuation	PVB with shuttle valve	Flow – l/min [US gal/min]			
			A → T	P → A	P → B	B → T
157B7150	PVE	-	10 [2,6]	10 [2,6]	10 [2,6]	10 [2,6]
157B7151	PVE	-	25 [6,6]	25 [6,6]	25 [6,6]	25 [6,6]
157B7152	PVE	-	40 [10,6]	40 [10,6]	40 [10,6]	40 [10,6]
157B7153	PVE	-	65 [17,2]	65 [17,2]	65 [17,2]	65 [17,2]
157B7154	PVE	-	100 [26,4]	100 [26,4]	100 [26,4]	100 [26,4]
11067130	PVE	Yes	10 [2,6]	10 [2,6]	10 [2,6]	10 [2,6]
157B7171	PVE	Yes	25 [6,6]	25 [6,6]	25 [6,6]	25 [6,6]
157B9556	PVE	Yes	30 [7,9]	30 [7,9]	30 [7,9]	30 [7,9]
157B7172	PVE	Yes	40 [10,6]	40 [10,6]	40 [10,6]	40 [10,6]
157B7173	PVE	Yes	65 [17,2]	65 [17,2]	65 [17,2]	65 [17,2]
157B7174	PVE	Yes	100 [26,4]	100 [26,4]	100 [26,4]	100 [26,4]
11107242	PVH/PVHC	Yes	40 [10,6]	40 [10,6]	40 [10,6]	40 [10,6]
157B9173	PVH/PVHC	Yes	65 [17,2]	65 [17,2]	65 [17,2]	65 [17,2]

Part numbers for Asymmetric FC/PC Control Spools

Part Number	Actuation	PVB with shuttle valve	Flow – l/min [US gal/min]			
			A → T	P → A	P → B	B → T
157B9592	PVE	Yes	40 [10,6]	40 [10,6]	15 [4,0]	15 [4,0]
11051961	PVE	Yes	100 [26,4]	100 [26,4]	65 [17,2]	65 [17,2]
11139550	PVE	Yes	115 [30,4]	115 [30,4]	65 [17,2]	65 [17,2]

Part number for Back pressure, FC/PC Spools (A/B->T flow track smaller than P->A/B)

Part Number	Actuation	PVB with shuttle valve	Flow – l/min [US gal/min]			
			A → T	P → A	P → B	B → T
157B9548	PVE	Yes	25 [6.6]	25 [6.6]	25 [6.6]	5 [1.3]

Flow/Pressure Control Spools—Throttled Open B to T in Neutral Position

All spools have pressure control on port A, flow control on port B and a dead band on 1,5 mm [0,06 in].

Schematic for PVBS without shuttle valve

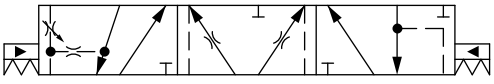

Schematic for PVBS with shuttle valve

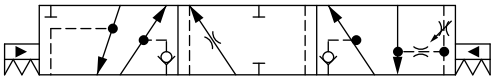

PVBS Main Spools Part Numbers

Part numbers for Symmetric FC/PC Control Spools

Part Number	Actuation	PVB with shuttle valve	Flow – l/min [US gal/min]			
			A → T	P → A	P → B	B → T
157B7150	PVE	-	10 [2,6]	10 [2,6]	10 [2,6]	10 [2,6]
157B7151	PVE	-	25 [6,6]	25 [6,6]	25 [6,6]	25 [6,6]
157B7152	PVE	-	40 [10,6]	40 [10,6]	40 [10,6]	40 [10,6]
157B7153	PVE	-	65 [17,2]	65 [17,2]	65 [17,2]	65 [17,2]
11122525	PVE	Yes	10 [2,6]	10 [2,6]	10 [2,6]	10 [2,6]
157B7562	PVE	Yes	40 [10,6]	40 [10,6]	40 [10,6]	40 [10,6]
157B7563	PVE	Yes	65 [17,2]	65 [17,2]	65 [17,2]	65 [17,2]

Part numbers for Asymmetric FC/PC Control Spools

Part Number	Actuation	PVB with shuttle valve	Flow – l/min [US gal/min]			
			A → T	P → A	P → B	B → T
157B9198	PVE	Yes	10 [2.6]	10 [2.6]	40 [10.6]	40 [10.6]

PVBS Main Spools Part Numbers

Flow/Pressure Control Spools—Throttled Open A to T in Neutral Position

All spools have flow control on port A, pressure control on port B and a dead band on 1,5 mm [0,06 in].

Schematic for PVBS without shuttle valve

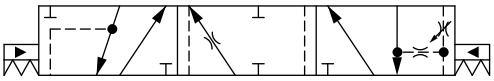

Schematic for PVBS with shuttle valve

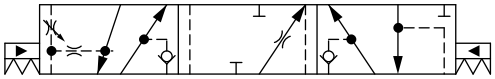

Part numbers for Symmetric Control Spools

Part Number	Actuation	PVB with shuttle valve	Flow – l/min [US gal/min]			
			A → T	P → A	P → B	B → T
157B7450	PVE	-	10 [2,6]	10 [2,6]	10 [2,6]	10 [2,6]
157B7451	PVE	-	25 [6,6]	25 [6,6]	25 [6,6]	25 [6,6]
157B7452	PVE	-	40 [10,6]	40 [10,6]	40 [10,6]	40 [10,6]
157B7453	PVE	-	65 [17,2]	65 [17,2]	65 [17,2]	65 [17,2]
157B7470	PVE	Yes	10 [2,6]	10 [2,6]	10 [2,6]	10 [2,6]
157B7471	PVE	Yes	25 [6,6]	25 [6,6]	25 [6,6]	25 [6,6]
157B7472	PVE	Yes	40 [10,6]	40 [10,6]	40 [10,6]	40 [10,6]
157B7473	PVE	Yes	65 [17,2]	65 [17,2]	65 [17,2]	65 [17,2]
157B9083	PVH/PVHC	Yes	65 [17,2]	65 [17,2]	65 [17,2]	65 [17,2]

Part numbers for Asymmetric Control Spools

Part Number	Actuation	PVB with shuttle valve	Flow – l/min [US gal/min]			
			A → T	P → A	P → B	B → T
157B9660	PVE	Yes	40 [10.6]	40 [10.6]	25 [6.6]	40 [10.6]

PVBS Main Spools Part Numbers

Flow/Pressure Control Spools—Throttled Open B to T in Neutral Position

All spools have flow control on port A, pressure control on port B and a dead band on 1,5 mm [0,06 in].

Schematic for PVBS without shuttle valve

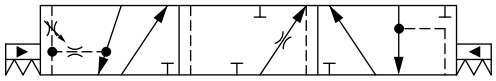

Schematic for PVBS with shuttle valve

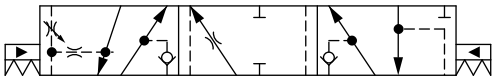

Part numbers for Asymmetric Control Spools

Part Number	Actuation	PVB with shuttle valve	Flow – l/min [US gal/min]			
			A → T	P → A	P → B	B → T
157B9591	PVE	-	40 [10,6]	40 [10,6]	25 [6,6]	40 [10,6]
157B9641	PVE	-	50 [13,2]	50 [13,2]	10 [2,6]	10 [2,6]
157B9660	PVE	Yes	50 [13,2]	50 [13,2]	10 [2,6]	10 [2,6]
157B9832	PVE	Yes	55 [14,5]	55 [14,5]	25 [6,6]	25 [6,6]

Flow/Pressure Control Spools—Open/Closed in Neutral Position

All spools have flow control on port A, pressure control on port B and a dead band on 1,0 mm [0,04 in].

Schematic for PVBS without shuttle valve

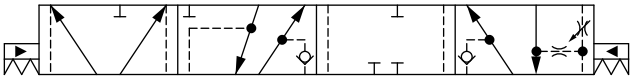

Part number for Back pressure FC/PC Spools (A/B->T flow track smaller than P->A/B)

Part Number	Actuation	PVB with shuttle valve	Flow – l/min [US gal/min]			
			A → T	P → A	P → B	B → T
11067514	PVE	—	40 [10.6]	40 [10.6]	25 [6.6]	25 [6.6]

Flow/Pressure Control Spools—Closed A and Open/Closed B Position

Schematic for PVBS with shuttle valve

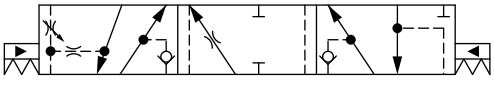

Part numbers for Symmetric Flow Control Spools

Part Number	Actuation	PVB with shuttle valve	Flow – l/min [US gal/min]			
			A → T	P → A	P → B	B → T
11213570	PVE	Yes	40 [10.6]	40 [10.6]	40 [10.6]	40 [10.6]

PVBS Main Spools Part Numbers

Pressure Control Spools—Closed Neutral Position

Schematic for PVBS without shuttle valve

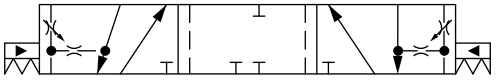

Schematic for PVBS with shuttle valve

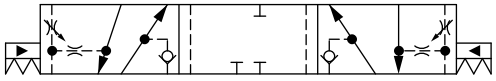

Part numbers for Symmetric PC Spools

Part Number	Actuation	PVB with shuttle valve	Flow – l/min [US gal/min]			
			A → T	P → A	P → B	B → T
157B7015	PVE	-	5 [1,3]	5 [1,3]	5 [1,3]	5 [1,3]
157B7010	PVE	-	10 [2,6]	10 [2,6]	10 [2,6]	10 [2,6]
157B9540	PVE	-	18 [4,8]	18 [4,8]	18 [4,8]	18 [4,8]
157B7011	PVE	-	25 [6,6]	25 [6,6]	25 [6,6]	25 [6,6]
157B7012	PVE	-	40 [10,6]	40 [10,6]	40 [10,6]	40 [10,6]
157B7013	PVE	-	65 [17,2]	65 [17,2]	65 [17,2]	65 [17,2]
157B7035	PVE	Yes	5 [1,3]	5 [1,3]	5 [1,3]	5 [1,3]
157B7030	PVE	Yes	10 [2,6]	10 [2,6]	10 [2,6]	10 [2,6]
11081829	PVE	Yes	18 [4,8]	18 [4,8]	18 [4,8]	18 [4,8]
157B7031	PVE	Yes	25 [6,6]	25 [6,6]	25 [6,6]	25 [6,6]
157B7032	PVE	Yes	40 [10,6]	40 [10,6]	40 [10,6]	40 [10,6]
157B7033	PVE	Yes	65 [17,2]	65 [17,2]	65 [17,2]	65 [17,2]
157B9683	PVE	Yes	100 [26,4]	100 [26,4]	100 [26,4]	100 [26,4]
157B9015	PVH/PVHC	-	5 [1,3]	5 [1,3]	5 [1,3]	5 [1,3]
157B9010	PVH/PVHC	-	10 [2,6]	10 [2,6]	10 [2,6]	10 [2,6]
157B9540	PVH/PVHC	-	18 [4,8]	18 [4,8]	18 [4,8]	18 [4,8]
157B9011	PVH/PVHC	-	25 [6,6]	25 [6,6]	25 [6,6]	25 [6,6]
157B9012	PVH/PVHC	-	40 [10,6]	40 [10,6]	40 [10,6]	40 [10,6]
157B9013	PVH/PVHC	-	65 [17,2]	65 [17,2]	65 [17,2]	65 [17,2]

Back pressure PC Spools (A/B->T flow track smaller than P->A/B)

Part Number	Actuation	PVB with shuttle valve	Flow – l/min [US gal/min]			
			A → T	P → A	P → B	B → T
11177945	PVE	-	40 [10,6]	65 [17,2]	65 [17,2]	65 [17,2]

PVBS Main Spools Part Numbers

Pressure Control Spools—Throttled Open Neutral Position

All spools have pressure control on port A and B and a dead band on 1,5 mm [0,06 in].

Schematic for PVBS without shuttle valve

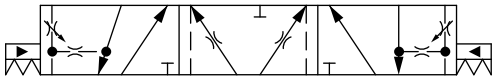

Schematic for PVBS with shuttle valve

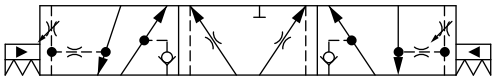

Part numbers for Symmetric Flow Control Spools

Part Number	Actuation	PVB with shuttle valve	Flow – l/min [US gal/min]			
			A → T	P → A	P → B	B → T
157B7115	PVE	-	5 [1,3]	5 [1,3]	5 [1,3]	5 [1,3]
157B7110	PVE	-	10 [2,6]	10 [2,6]	10 [2,6]	10 [2,6]
157B7111	PVE	-	25 [6,6]	25 [6,6]	25 [6,6]	25 [6,6]
157B7112	PVE	-	40 [10,6]	40 [10,6]	40 [10,6]	40 [10,6]
157B7113	PVE	-	65 [17,2]	65 [17,2]	65 [17,2]	65 [17,2]
157B9853	PVE	Yes	3 [0,8]	3 [0,8]	3 [0,8]	3 [0,8]
157B7135	PVE	Yes	5 [1,3]	5 [1,3]	5 [1,3]	5 [1,3]
157B7130	PVE	Yes	10 [2,6]	10 [2,6]	10 [2,6]	10 [2,6]
157B7131	PVE	Yes	25 [6,6]	25 [6,6]	25 [6,6]	25 [6,6]
157B7132	PVE	Yes	40 [10,6]	40 [10,6]	40 [10,6]	40 [10,6]
157B7133	PVE	Yes	65 [17,2]	65 [17,2]	65 [17,2]	65 [17,2]
157B7134	PVE	Yes	100 [26,4]	100 [26,4]	100 [26,4]	100 [26,4]
11057575	PVH/PVHC	-	5 [1,3]	5 [1,3]	5 [1,3]	5 [1,3]
157B9110	PVH/PVHC	-	10 [2,6]	10 [2,6]	10 [2,6]	10 [2,6]
157B9112	PVH/PVHC	-	40 [10,6]	40 [10,6]	40 [10,6]	40 [10,6]
157B9113	PVH/PVHC	-	65 [17,2]	65 [17,2]	65 [17,2]	65 [17,2]
11057314	PVH/PVHC	Yes	5 [1,3]	5 [1,3]	5 [1,3]	5 [1,3]
157B9130	PVH/PVHC	Yes	10 [2,6]	10 [2,6]	10 [2,6]	10 [2,6]
157B9131	PVH/PVHC	Yes	25 [6,6]	25 [6,6]	25 [6,6]	25 [6,6]

Part numbers for Asymmetric Flow Control Spools

Part Number	Actuation	PVB with shuttle valve	Flow – l/min [US gal/min]			
			A → T	P → A	P → B	B → T
157B9525	PVE	-	20 [5,3]	20 [5,3]	10 [2,6]	10 [2,6]
11041330	PVE	-	40 [10,6]	40 [10,6]	20 [5,3]	20 [5,3]
157B9634	PVH/PVHC	Yes	10 [2,6]	10 [2,6]	5 [1,3]	5 [1,3]

PVBS Main Spools Part Numbers

Pressure Control Spools—Throttled A to T in Neutral Position

Schematic for PVBS with shuttle valve

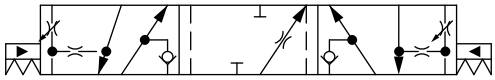

Part numbers for PC Spools Throttled A to T in Neutral Position

Part Number	Actuation	PVB with shuttle valve	Flow – l/min [US gal/min]			
			A → T	P → A	P → B	B → T
157B9646	PVE	Yes	15 [4]	15 [4]	15 [4]	15 [4]
157B9199	PVE	Yes	10 [2.6]	10 [2.6]	40 [10.6]	40 [10.6]

PVBS Main Spools Part Numbers

Pressure/Flow Control Spools—Closed Neutral Position

All spools have pressure control on port A, flow control on port B and a dead band on 1,5 mm [0,06 in].

Schematic for PVBS without shuttle valve

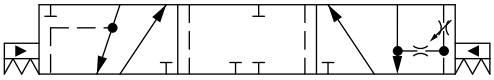

Schematic for PVBS with shuttle valve

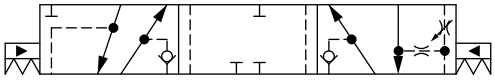

Part numbers for Symmetric PC/FC Spools

Part Number	Actuation	PVB with shuttle valve	Flow – l/min [US gal/min]			
			A → T	P → A	P → B	B → T
157B7040	PVE	-	10 [2,6]	10 [2,6]	10 [2,6]	10 [2,6]
157B7041	PVE	-	25 [6,6]	25 [6,6]	25 [6,6]	25 [6,6]
157B7042	PVE	-	40 [10,6]	40 [10,6]	40 [10,6]	40 [10,6]
157B7043	PVE	-	65 [17,2]	65 [17,2]	65 [17,2]	65 [17,2]
157B7044	PVE	-	100 [26,4]	100 [26,4]	100 [26,4]	100 [26,4]
157B7061	PVE	Yes	25 [6,6]	25 [6,6]	25 [6,6]	25 [6,6]
157B7062	PVE	Yes	40 [10,6]	40 [10,6]	40 [10,6]	40 [10,6]
157B7063	PVE	Yes	65 [17,2]	65 [17,2]	65 [17,2]	65 [17,2]
157B7064	PVE	Yes	100 [26,4]	100 [26,4]	100 [26,4]	100 [26,4]
157B9040	PVH/PVHC	-	10 [2,6]	10 [2,6]	10 [2,6]	10 [2,6]
157B9041	PVH/PVHC	-	25 [6,6]	25 [6,6]	25 [6,6]	25 [6,6]
157B9042	PVH/PVHC	-	40 [10,6]	40 [10,6]	40 [10,6]	40 [10,6]
157B9043	PVH/PVHC	-	65 [17,2]	65 [17,2]	65 [17,2]	65 [17,2]
157B9044	PVH/PVHC	-	100 [26,4]	100 [26,4]	100 [26,4]	100 [26,4]
157B9062	PVH/PVHC	Yes	40 [10,6]	40 [10,6]	40 [10,6]	40 [10,6]
157B9063	PVH/PVHC	Yes	65 [17,2]	65 [17,2]	65 [17,2]	65 [17,2]

Part numbers for Asymmetric PC/FC Spools

Part Number	Actuation	PVB with shuttle valve	Flow – l/min [US gal/min]			
			A → T	P → A	P → B	B → T
157B9589	PVE	Yes	25 [6.6]	25 [6.6]	40 [10,6]	40 [10,6]
157B9528	PVE	Yes	65 [17,2]	40 [10,6]	65 [17,2]	65 [17,2]
11223873	PVE	Yes	65 [17,2]	40 [10,6]	65 [17,2]	40 [10,6]

Back pressure PC/FC Spools (A/B->T flow track smaller than P->A/B)

Part Number	Actuation	PVB with shuttle valve	Flow – l/min [US gal/min]			
			A → T	P → A	P → B	B → T
157B9532	PVE	Yes	25 [6,6]	65 [17,2]	25 [6,6]	10 [2,6]
11051179	PVE	Yes	25 [6,6]	10 [2,6]	25 [6,6]	5 [1,3]
157B9535	PVE	Yes	40 [10,6]	10 [2,6]	40 [10,6]	25 [6,6]
11051177	PVE	Yes	25 [6,6]	25 [6,6]	40 [10,6]	10 [2,6]

PVBS Main Spools Part Numbers

Pressure/Flow Control Spools—Closed Neutral Position with B-float

All spools have pressure control on port A, flow control on port B and a dead band on 1,5 mm [0,06 in].

Schematic for PVBS without shuttle valve

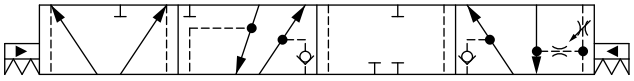

Part number for Symmetric PC/FC Spools

Part Number	Actuation	PVB with shuttle valve	Flow – l/min [US gal/min]			
			A → T	P → A	P → B	B → T
157B9637	PVE	—	10 [2.6]	10 [2.6]	10 [2.6]	10 [2.6]

Pressure/Flow Control Spools—Throttled Open Neutral Position

All spools have pressure control on port A, flow control on port B and a dead band on 1,5 mm [0,06 in].

Schematic for PVBS without shuttle valve

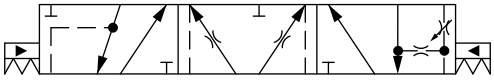

Schematic for PVBS with shuttle valve

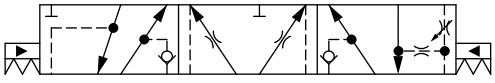

Part numbers for Symmetric PC/FC Control Spools

Part Number	Actuation	PVB with shuttle valve	Flow – l/min [US gal/min]			
			A → T	P → A	P → B	B → T
11122564	PVE	-	10 [2,6]	10 [2,6]	10 [2,6]	10 [2,6]
157B7141	PVE	-	25 [6,6]	25 [6,6]	25 [6,6]	25 [6,6]
157B7142	PVE	-	40 [10,6]	40 [10,6]	40 [10,6]	40 [10,6]
157B7143	PVE	-	65 [17,2]	65 [17,2]	65 [17,2]	65 [17,2]
157B7144	PVE	-	100 [26,4]	100 [26,4]	100 [26,4]	100 [26,4]
157B7161	PVE	Yes	25 [6,6]	25 [6,6]	25 [6,6]	25 [6,6]
157B7162	PVE	Yes	40 [10,6]	40 [10,6]	40 [10,6]	40 [10,6]
157B7163	PVE	Yes	65 [17,2]	65 [17,2]	65 [17,2]	65 [17,2]
157B7164	PVE	Yes	100 [26,4]	100 [26,4]	100 [26,4]	100 [26,4]
157B9163	PVH/PVHC	Yes	65 [17,2]	65 [17,2]	65 [17,2]	65 [17,2]

Part numbers for Asymmetric PC/FC Control Spools

Part Number	Actuation	PVB with shuttle valve	Flow – l/min [US gal/min]			
			A → T	P → A	P → B	B → T
157B9811	PVE	Yes	10 [2,6]	10 [2,6]	40 [10,6]	65 [17,2]
157B9988	PVE	Yes	25 [6,6]	10 [2,6]	25 [6,6]	25 [6,6]

Pressure/Flow Control Spools—Open/Closed Neutral Position

Schematic for PVBS without shuttle valve

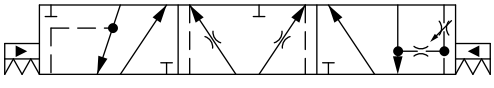

PVBS Main Spools Part Numbers

Part number for PC/FC Spool Open/Closed in Neutral Position

Part Number	Actuation	PVB with shuttle valve	Flow – l/min [US gal/min]			
			A → T	P → A	P → B	B → T
11104931	PVE	—	40 [10.6]	40 [10.6]	40 [10.6]	40 [10.6]

Pressure/Flow Control Spools—Open/Closed A and Closed B Position

Schematic for PVBS with shuttle valve

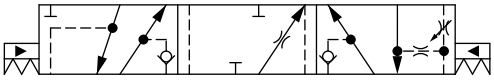

Part numbers for Symmetric Flow Control Spools

Part Number	Actuation	PVB with shuttle valve	Flow – l/min [US gal/min]			
			A → T	P → A	P → B	B → T
11213571	PVE	Yes	40 [10.6]	40 [10.6]	40 [10.6]	40 [10.6]
11198095	PVE	Yes	65 [17.2]	65 [17.2]	65 [17.2]	65 [17.2]

PVBS for PVBZ Main Spools Part Numbers

PVBZ Flow Control Spools—Closed Neutral Position

Schematic for PVBZ without shuttle valve

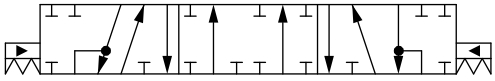

Schematic for PVBZ with shuttle valve

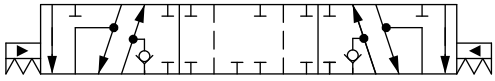

Part numbers for Symmetric Flow Control Spools

Part Number	Actuation	PVB with shuttle valve	Flow – l/min [US gal/min]			
			A → T	P → A	P → B	B → T
157B9405	PVE	-	5 [1,3]	5 [1,3]	5 [1,3]	5 [1,3]
157B9400	PVE	-	10 [2,6]	10 [2,6]	10 [2,6]	10 [2,6]
157B9401	PVE	-	25 [6,6]	25 [6,6]	25 [6,6]	25 [6,6]
157B9402	PVE	-	40 [10,6]	40 [10,6]	40 [10,6]	40 [10,6]
157B9403	PVE	-	65 [17,2]	65 [17,2]	65 [17,2]	65 [17,2]
157B9404	PVE	-	100 [26,4]	100 [26,4]	100 [26,4]	100 [26,4]
11051945	PVE	Yes	5 [1,3]	5 [1,3]	5 [1,3]	5 [1,3]
11019630	PVE	Yes	10 [2,6]	10 [2,6]	10 [2,6]	10 [2,6]
11019631	PVE	Yes	25 [6,6]	25 [6,6]	25 [6,6]	25 [6,6]
11019633	PVE	Yes	40 [10,6]	40 [10,6]	40 [10,6]	40 [10,6]
11019634	PVE	Yes	65 [17,2]	65 [17,2]	65 [17,2]	65 [17,2]
11019635	PVE	Yes	100 [26,4]	100 [26,4]	100 [26,4]	100 [26,4]
11105665	PVH/PVHC	-	5 [1,3]	5 [1,3]	5 [1,3]	5 [1,3]
11105445	PVH/PVHC	-	10 [2,6]	10 [2,6]	10 [2,6]	10 [2,6]
11105446	PVH/PVHC	-	25 [6,6]	25 [6,6]	25 [6,6]	25 [6,6]
11125900	PVH/PVHC	-	100 [26,4]	100 [26,4]	100 [26,4]	100 [26,4]
11140563	PVH/PVHC	Yes	25 [6,6]	25 [6,6]	25 [6,6]	25 [6,6]
11140564	PVH/PVHC	Yes	65 [17,2]	65 [17,2]	65 [17,2]	65 [17,2]

Part numbers for Back pressure Flow Control Spools (A/B->T flow track smaller than P->A/B)

Part Number	Actuation	PVB with shuttle valve	Flow – l/min [US gal/min]			
			A → T	P → A	P → B	B → T
157B9573*	PVH/PVHC	-	38 [10,0]	25 [6,6]	65 [17,2]	15 [4,0]
157B9651	PVE	-	38 [10,0]	25 [6,6]	65 [17,2]	15 [4,0]
11084227	PVE	Yes	5 [1,3]	25 [6,6]	25 [6,6]	25 [6,6]
11129527	PVE	Yes	40 [10,6]	10 [2,6]	40 [10,6]	10 [2,6]
11085297	PVE	Yes	20 [5,2]	40 [10,6]	40 [10,6]	10 [2,6]

* Deadband 1,5 mm [0,06].

PVBZ Flow Control Spools—Closed Neutral Position with A-float

Schematic for PVBZ with shuttle valve

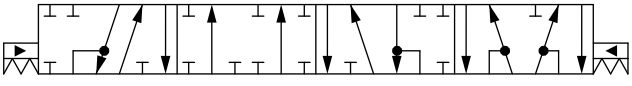

PVBS for PVBZ Main Spools Part Numbers

Part numbers for Symmetric Flow Control Spools

Part Number	Actuation	PVB with shuttle valve	Flow – l/min [US gal/min]			
			A → T	P → A	P → B	B → T
157B9415	PVE	Yes	5 [1,3]	5 [1,3]	5 [1,3]	5 [1,3]
157B9410	PVE	Yes	10 [2,6]	10 [2,6]	10 [2,6]	10 [2,6]
157B9411	PVE	Yes	25 [6,6]	25 [6,6]	25 [6,6]	25 [6,6]
157B9412	PVE	Yes	40 [10,6]	40 [10,6]	40 [10,6]	40 [10,6]
157B9413	PVE	Yes	65 [17,2]	65 [17,2]	65 [17,2]	65 [17,2]
157B9414	PVE	Yes	100 [26,4]	100 [26,4]	100 [26,4]	100 [26,4]
11027130	PVH/PVHC	Yes	25 [6,6]	25 [6,6]	25 [6,6]	25 [6,6]
11124250	PVH/PVHC	Yes	100 [26,4]	100 [26,4]	100 [26,4]	100 [26,4]

Part numbers for Back pressure Flow Control Spools (A/B->T flow track smaller than P->A/B)

Part Number	Actuation	PVB with shuttle valve	Flow – l/min [US gal/min]			
			A → T	P → A	P → B	B → T
11085128	PVE	Yes	2 [0,5]	10 [2,6]	10 [2,6]	5 [1,3]

Part number Flow Control Spools for PVML

Part Number	Actuation	PVB with shuttle valve	Flow – l/min [US gal/min]			
			A → T	P → A	P → B	B → T
11128843	PVE	Yes	40 [10,6]	40 [10,6]	40 [10,6]	40 [10,6]
157B9596	PVE	Yes	100 [26,4]	100 [26,4]	100 [26,4]	100 [26,4]
157B9631	PVE	Yes	100 [26,4]	100 [26,4]	100 [26,4]	100 [26,4]
11017592	PVE	Yes	120 [31,7]	120 [31,7]	120 [31,7]	120 [31,7]
157B9434[1)]	PVE	Yes	120 [31,7]	120 [31,7]	120 [31,7]	120 [31,7]

[1)] Dead band 0,8 mm [0,03 in].

PVBZ Flow Control Spools—Closed Neutral Position with B-float

Schematic for PVBZ with shuttle valve

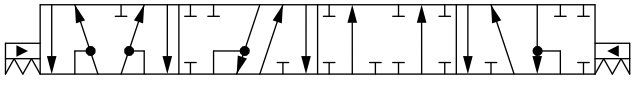

Part numbers for Symmetric Flow Control Spools

Part Number	Actuation	PVB with shuttle valve	Flow – l/min [US gal/min]			
			A → T	P → A	P → B	B → T
11147069	PVE	Yes	100 [26.4]	100 [26.4]	100 [26.4]	100 [26.4]

Part number Flow Control Spools for PVML

Part Number	Actuation	PVB with shuttle valve	Flow – l/min [US gal/min]			
			A → T	P → A	P → B	B → T
11146502	PVE	Yes	100 [26.4]	100 [26.4]	100 [26.4]	100 [26.4]

PVBS for PVBZ Main Spools Part Numbers

PVBZ Flow Control Spools—Throttled Open Neutral Position with B-float

Schematic for PVBZ with shuttle valve

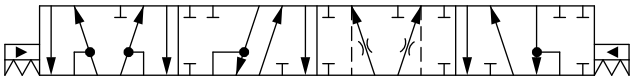

Part number for Symmetric Flow Control Spools

Part Number	Actuation	PVB with shuttle valve	Flow – l/min [US gal/min]			
			A → T	P → A	P → B	B → T
157B9690	PVE	Yes	15 [4]	15 [4]	15 [4]	15 [4]

Part number Flow Control Spools for PVML

Part Number	Actuation	PVB with shuttle valve	Flow – l/min [US gal/min]			
			A → T	P → A	P → B	B → T
11146502	PVE	Yes	100 [26.4]	100 [26.4]	100 [26.4]	100 [26.4]

PVBS for PVBZ Main Spools Part Numbers

PVBZ Linear Flow Control Spools—Closed Neutral Position

Schematic for PVBZ without shuttle valve

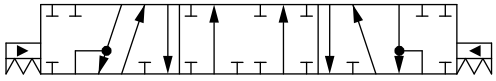

Schematic for PVBZ with shuttle valve

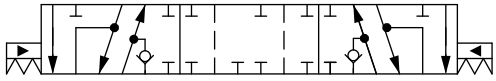

Part numbers for Symmetric Flow Control Spools

Part Number	Actuation	PVB with shuttle valve	Flow – l/min [US gal/min]			
			A → T	P → A	P → B	B → T
157B9664	PVE	-	25 [6,6]	25 [6,6]	25 [6,6]	25 [6,6]
157B9809	PVE	-	80 [21,1]	80 [21,1]	80 [21,1]	80 [21,1]

Part numbers for Asymmetric Flow Control Spools

Part Number	Actuation	PVB with shuttle valve	Flow – l/min [US gal/min]			
			A → T	P → A	P → B	B → T
11130939	PVE	Yes	25 [6,6]	40 [10,6]	40 [10,6]	25 [6,6]

Part numbers for Flow Control Spools for PVML

Part Number	Actuation	PVB with shuttle valve	Flow - l/min [US gal/min]			
			A → T	P → A	P → B	B → T
157B9866	PVE	Yes	25 [6,6]	40 [10,6]	40 [10,6]	25 [6,6]

PVBZ Single Acting Cylinder Flow Control Spools—Closed Neutral A-port Position

Schematic for PVBS without shuttle valve

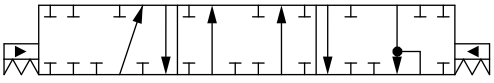

Symmetric flow control spools

Part Number	Actuation	PVB with shuttle valve	Flow – l/min [US gal/min]			
			A → T	P → A	P → B	B → T
157B9859	PVE	-	25 [6.6]	25 [6.6]	-	-

PVBS for PVBZ Main Spools Part Numbers

PVBZ Single Acting Cylinder Flow Control Spools—Closed Neutral B-port Position

Schematic for PVBS without shuttle valve

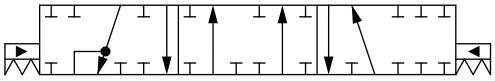

Symmetric flow control spools

Part Number	Actuation	PVB with shuttle valve	Flow – l/min [US gal/min]			
			A → T	P → A	P → B	B → T
11149444	PVE	-	-	-	140 [37]	140 [37]

PVBZ Single Acting Cylinder Linear Flow Control Spools—Closed Neutral B-port Position

Schematic for PVBS without shuttle valve

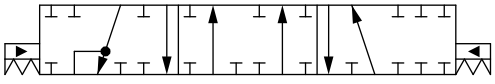

Symmetric flow control spools

Part Number	Actuation	PVB with shuttle valve	Flow – l/min [US gal/min]			
			A → T	P → A	P → B	B → T
157B9859	PVE	-	25 [6.6]	25 [6.6]	-	-

PVBZ–HS Single Acting Cylinder Flow Control Spools—Closed Neutral Position

Schematic for PVBS with or without shuttle valve

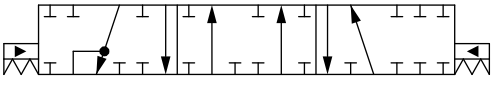

Back pressure Flow Control Spools (B->T flow track smaller than P->B)

Part Number	Actuation	PVB with shuttle valve	Flow – l/min [US gal/min]			
			A → T	P → A	P → B	B → T
157B9912	PVE	Yes	-	-	40 [10,6]	25 [6,6]
11098878	PVE	Yes	-	-	100 [26,4]	65 [17,2]

PVDI Directional Indicator

The PVDI Directional Indicator offers an independent electrical direction feedback and monitoring on the spool position relative neutral for a redundant feedback to the system controller. It can be used in combination with manual (PVM), hydraulic (PVH) and electrical (PVE) controls.

The PVDI features:

- Redundant spool movement detection
- Fits with PVBS 1.5 mm [0.059 in]
- Electrical feedback can supply a relay

The PVDI can not be used with PVMF or PVMR and must be shielded.

PVDI Directional Indicator module

Weight: 0.6 kg [1.32 lb]

PVDI Directional Indicator dimensions

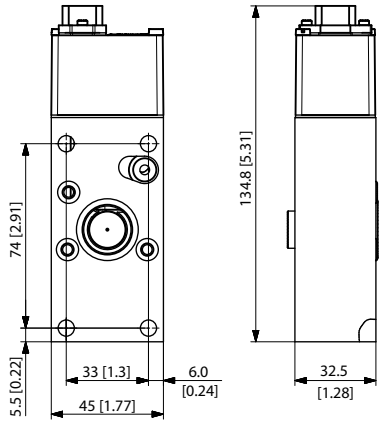

Technical specifications

Voltage	12 V – 24 V (min.10 V / max. 38 V)
Current consumption	10 mA – 100 mA
Maximum current draw on pins	5 A
Switch position	± 0.7 mm (+0.3/-0.2) [± 0.028 in (±0.01)]
Connector type	1x4 DIN
Grade of enclosure	IP 65

According to the standard IEC 60529 Edition 2.2 2013-08, protection in the form of screening is recommended.

Part numbers for PVDI

Part number	Description
157B0101	PVDI type, PVE cover.
157B0102	
157B0103	
157B0104	PVDI-H; PVH cover; Must be used with an intermediate plate.
157B0105	PVDI type with two NO switches; PVE cover.

PVG 32 Actuation

PVG 32 actuation can be done manually, hydraulically, electro-hydraulically and electrically.

PVG 32 actuation overview:

- *PVM Manual Actuation* on page 131
  - *PVML, Spring Centering Cover* on page 134
  - *PVMD/F/R Detention Covers* on page 133
- *PVH Hydraulic Actuation* on page 135
- *PVHC Electro-Hydraulic Actuation* on page 136
- *PVE Electro-hydraulic Actuation* on page 138
- *PVE Series 4* on page 140
  - *PVEP* on page 140
- *PVE Series 5* on page 144
  - *PVED-CC Series 5* on page 144
- *PVE Series 7* on page 149
  - *PVEO* on page 149
  - *PVEO-HP* on page 154
  - *PVEM* on page 158
  - *PVEA* on page 162
  - *PVEH* on page 166
  - *PVES* on page 170

PVG 32 Actuation

PVM Manual Actuation

The PVM manual actuation cover is intended for use on any work section where the operator has to have the ability to interact with the spool manually.

The PVM variants are based on a generic platform with a selection of additional features, enabling you to tailor the PVM to suit the demands of any hydraulic system, which includes the following main variants:

- PVM manual actuation or override of a function
- Spring centering cover without manual override (PVML)
  - Optional with lever base
  - Optional with lever base and lever
  - Optional flow adjustment screws

The adjustment screws are intended for limiting the spool travel and thereby the maximum achievable flow.

PVM cover

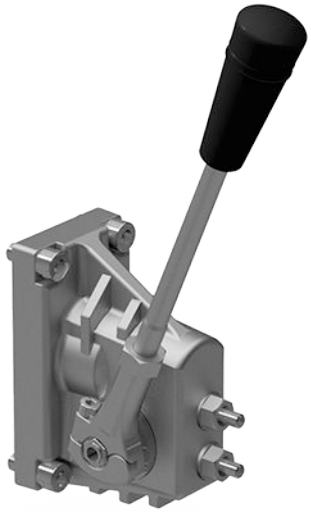

PVM dimensions

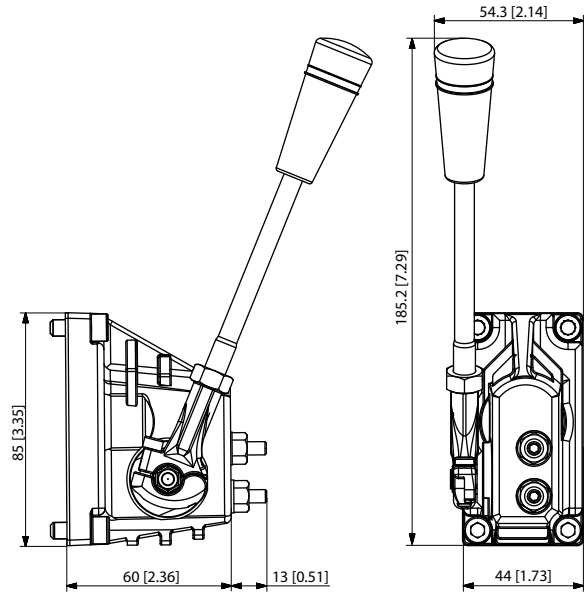

Control lever data

No lever position	Standard control range	Control lever range	Control lever range + float position
2 x 6	± 13.4°	± 19.5°	22.3°

PVM versions torque data

Spool displacement	PVM+PVMD PVM+PVE	PVM+PVH	PVM+PVMR	PVM+PVMF
From neutral position	2.2 ±0.2 N•m [19.5 ±1.8 lb•in]	2.5 ±0.2 N•m [22.1 ± 1.8 lb•in]	17 N•m [3.8 lb•in]	22 N•m [5.0 lb•in]
Max. spool travel	2.8 ±0.2 N•m [24.8 ±1.8 lb•in]	6.9 ±0.2 N•m [61.0 ±1.8 lb•in]	–	–
Into float position	–	–	–	60 N•m [13.5 lb•in]

PVG 32 Actuation

PVM versions torque data (continued)

Spool displacement	PVM+PVMD PVM+PVE	PVM+PVH	PVM+PVMR	PVM+PVMF
Away from float position	–	–	–	28 N•m [6.3 lb•in]
From any other position	–	–	8.5 N•m [73.3 lb•in]	–

Part number	Material	Adjustment screws	Lever base	Lever base and lever	Weight
157B3161	Cast iron	Yes	—	Yes	0,4 kg [0,88 lb]
157B3171	Aluminum	Yes	—	Yes	
157B3173	Aluminum	Yes	—	—	
157B3174	Aluminum	Yes	Yes	—	
157B3184	Anodized aluminum	Yes	—	Yes	
157B3186	Anodized aluminum	Yes	—	—	
157B3191	Aluminum	—	—	Yes	
157B3193	Aluminum	—	—	—	
157B3194	Aluminum	—	Yes	—	

PVM functionality

The PVMF is available in standard or optional mount. The friction detent allows the directional spool to be held in any position, resulting in infinitely variable, reversible, pressure compensated flow.

This can be sustained indefinitely without having to continue to hold the mechanical lever. Friction detent spool position may be affected by high differential actuator flow forces and system vibration resulting in work function flow reduction.

PVMF standard mount

P → A → F (Push–in)

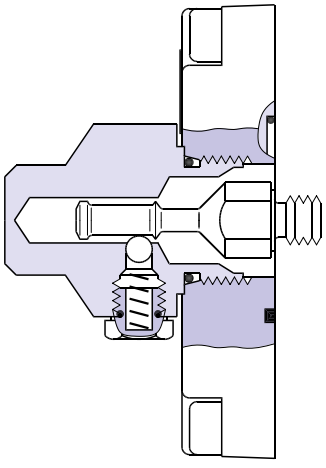

157-205.10

PVMF optional mount

P → A → F (Pull–out)

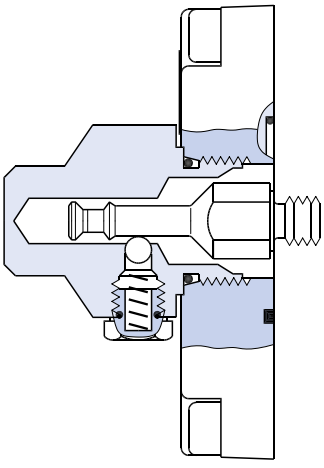

157-206.10

PVMR

Friction detent

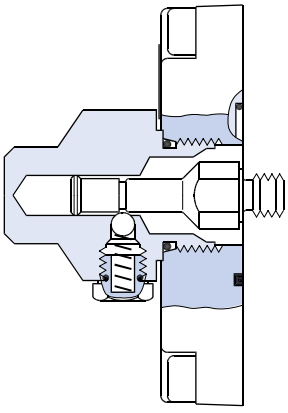

PVG 32 Actuation

PVMD/F/R Detention Covers

The PVMD/F/R covers, also referred to as detention covers, are intended for manually activated PVB sections.

The generic PVMD/F/R cover platform includes the following main variants:

- **PVMD** detention cover
- **PVMF** mechanical float position cover
- **PVMR** friction cover

PVMD symbol

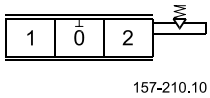

PVMF symbol

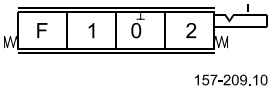

PVMR symbol

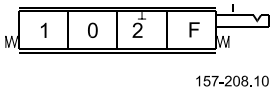

PVMD detention cover

Dimensions, mm [in]

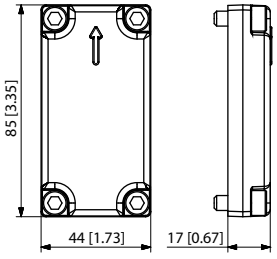

PVMF/R Cover

Dimensions, mm [in]

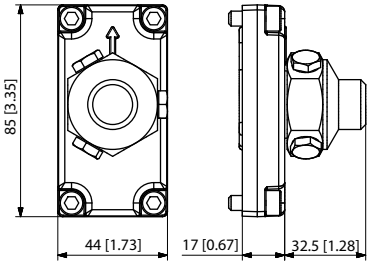

Part Numbers for PVMD/F/R Covers

Part number	Type	Material	Weight
157B0001	PVMD	Aluminum	0,15 – 0,38 kg [0.33 – 0.84 lb]
157B0009		Anodized aluminum	
157B0021		Cast iron	
157B0005	PVMF	Aluminum	0,34 – 0,57 kg [0.75 – 1.26 lb]
157B0004	PVMR	Aluminum	
157B0012		Anodized aluminum	
157B0024		Cast iron	

PVG 32 Actuation

PVML, Spring Centering Cover

The PVML spring centering cover is intended for use on any work section where the operator is not allowed to have a possibility to interact with the spool manually.

The adjustment screws are intended for limiting the spool travel and thereby the maximum achievable flow.

Part numbers for PVML

Part number	Material	Adjustment screws
157B3202	Aluminum	–
157B3203		Yes (single direction)

PVG 32 Actuation

PVH Hydraulic Actuation

The PVH hydraulic actuation is intended for use on any work section where the operator wants to have a possibility to interact with the main spool via a hydraulic joystick. The spool spring package must match with this activation method.

PVH cover

PVH 32 cover dimensions

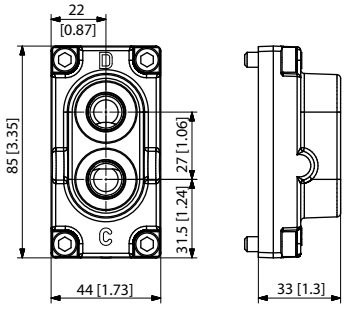

The hydraulic remote control lever should be connected directly to the tank.

Technical data

Main spool spring control pressure range	5 – 15 bar [73 – 218 psi]
Operating torque from neutral	2.5 ±0.2 N•m [22.1±1.8 lb•in]
Operating torque max spool position	6.9 ±0.2 N•m [61.0±1.8 lb•in]
Maximum pilot oil pressure	30 bar [435 psi]

Part numbers for PVH Hydraulic Actuation

Part number	Material	Connection	Weight
157B0007	Aluminum	9/16-18 UNF	0.2 – 0.75 kg [0.44 – 1.65 lb]
157B0008		G1/4″	
157B0010	Anodized aluminum	9/16-18 UNF	
157B0011		G1/4″	
157B0014	Cast iron	9/16-18 UNF	
157B0016		G1/4″	

PVG 32 Actuation

PVHC Electro-Hydraulic Actuation

The PVHC is an electrical actuator module for main spool control. The PVHC control is done by dual Pulse Width Modulated, high current supply 100-400 Hz PWM control signals. The spool position will shift when conditions are changed such as temperature change.

Inlet with Hydraulic Pilot Pressure is needed.

PVHC, Electro-Hydraulic Actuator

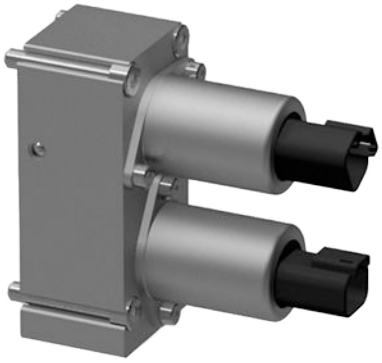

PVHC dimensions

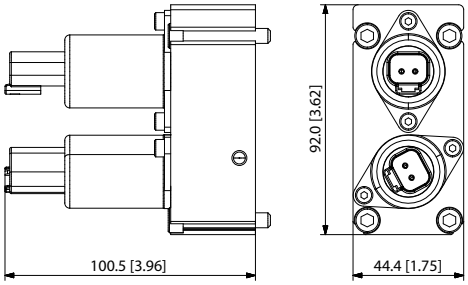

Weight: 0,93 kg [2.05 lb]

PVHC schematic

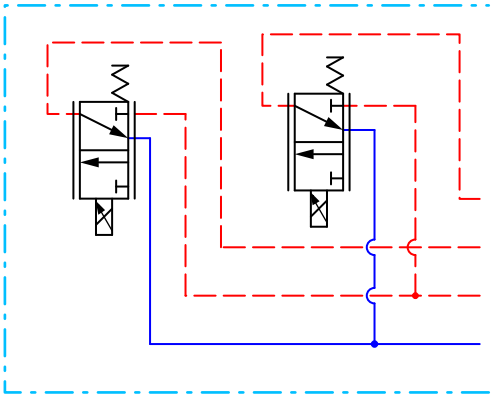

Dither frequency with a certain amplitude is needed for optimal application performance.

PVG 32 Actuation

PVHC spool stroke vs current characteristics

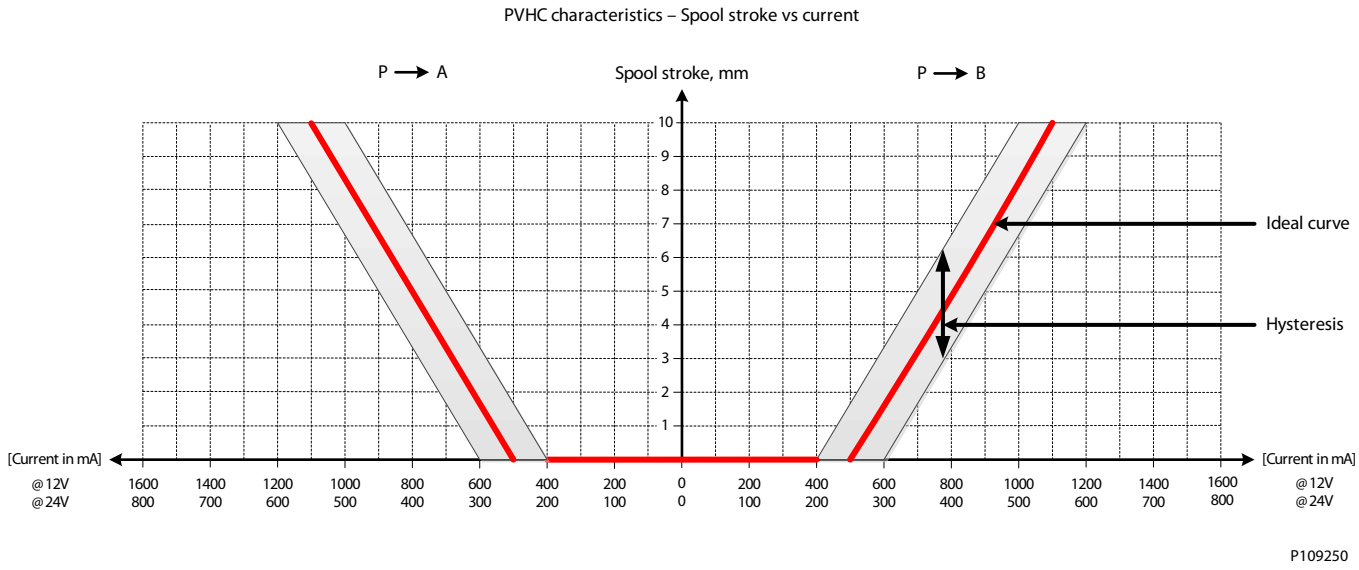

The hysteresis is affected by viscosity, friction, flow forces, dither frequency and modulation frequency.

Technical data

Supply Voltage U_{DC}	**12 V_{DC}**	**24 V_{DC}**
Current input	0 – 1500 mA	0 – 750 mA
Resistance	4.75 Ω ± 5 %	20.8 Ω ± 5 %
Response time	150 to 200 ms	
PWM frequency	100 to 400 Hz	
Pilot oil pressure range	20 – 25 bar [290 – 362 psi]	
Ambient temperature range	-30°C to 80°C [-22 °F to 176°F]	
Temperature range	-20°C to 80°C [-4 °F to 176°F]	
Fluid cleanliness	23/19/16 (according to ISO 4406)	

Part numbers for PVHC Actuators

Part number	**Power supply**	**Connector type**	**Protection Class**
11112037	12V	AMP	IP 66
11112036	24V		
11112038	12V	2x2 DEUTSCH	IP 67
11112039	24V		

PVE Electro-hydraulic Actuation

The analog PVE Series 4, 5 and 7 are electro-hydraulic actuators used to control a single work section of a PVG proportional valve group. The PVE actuator program for PVG 32 includes variants with different performance levels and features.

The actuator positions the main spool in a PVG work section to control either the flow or the pressure of the oil distributed to and from the work function. The control signal to the actuator is an analog voltage signal, enabling the user to operate the work function remotely by means of a joystick, a controller or the similar.

The electro-hydraulic solenoid valve bridge of the actuator is available in different designs utilizing different regulation principles, depending on performance variant. The actuator positions the main spool by distributing pilot oil pressure to either side of it, pressurizing one side by pilot pressure while relieving the opposite side to tank and vice versa. All proportional actuators feature a closed- loop spool control and continuous fault monitoring.

The different hydraulic principles combined with the different solenoid valve regulation principles determine whether the actuator controls the spool proportionally according to a demand signal or ON/OFF according to a voltage signal. The voltage control characteristic of the PVE actuators is shown in the figure below on the left side.

PVG 32 with PVEO/PVEM (PVEO without LVDT)

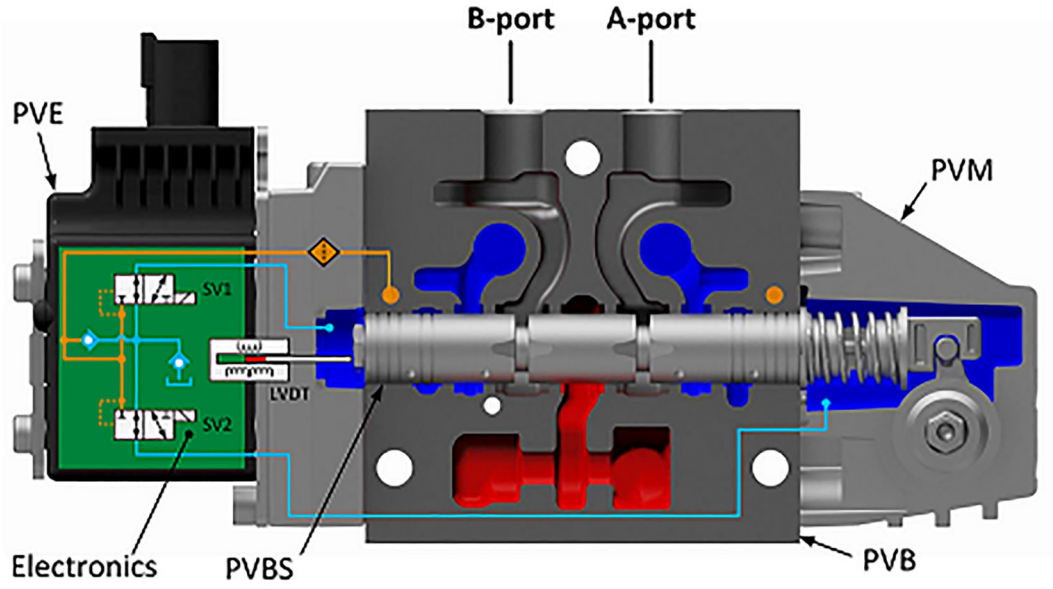

PVE Electro-hydraulic Actuation

PVG 32 with PVEH/PVES

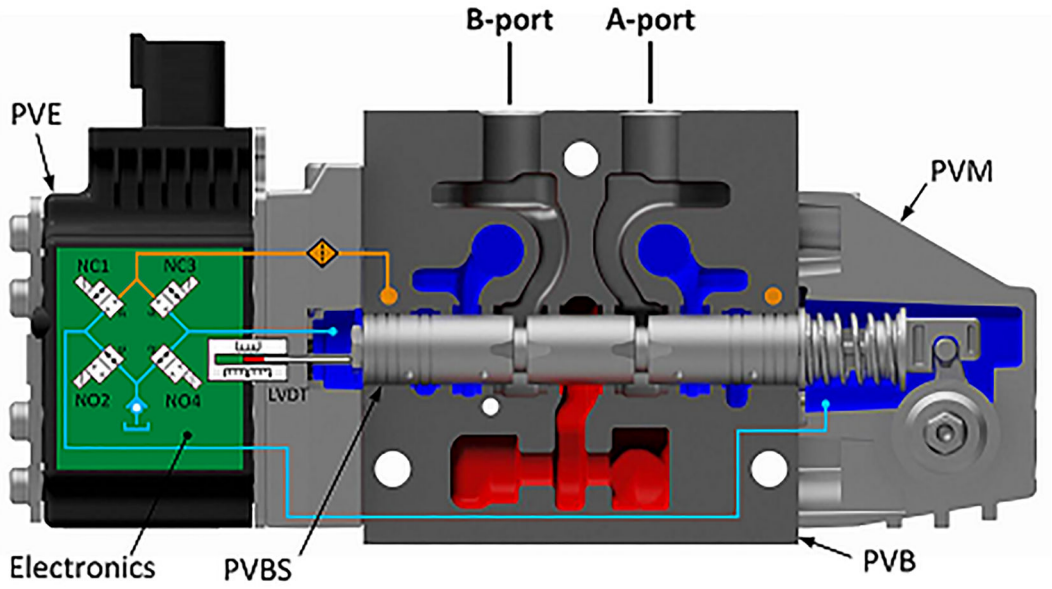

PVE Electro-hydraulic Actuation

PVE Series 4

PVEP

The PVEP actuator is a proportional control actuator with closed-loop spool control primarily used to control work functions with very high performance requirements.

PVEP

PVEP schematic

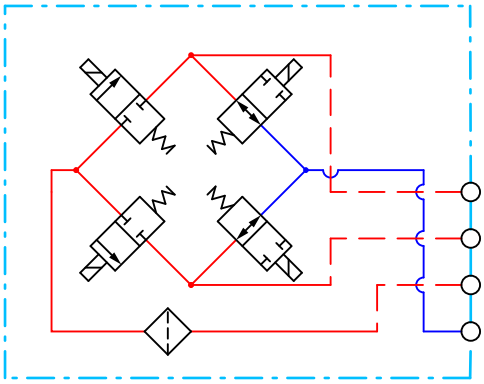

PVE Electro-hydraulic Actuation

PVEP functionality

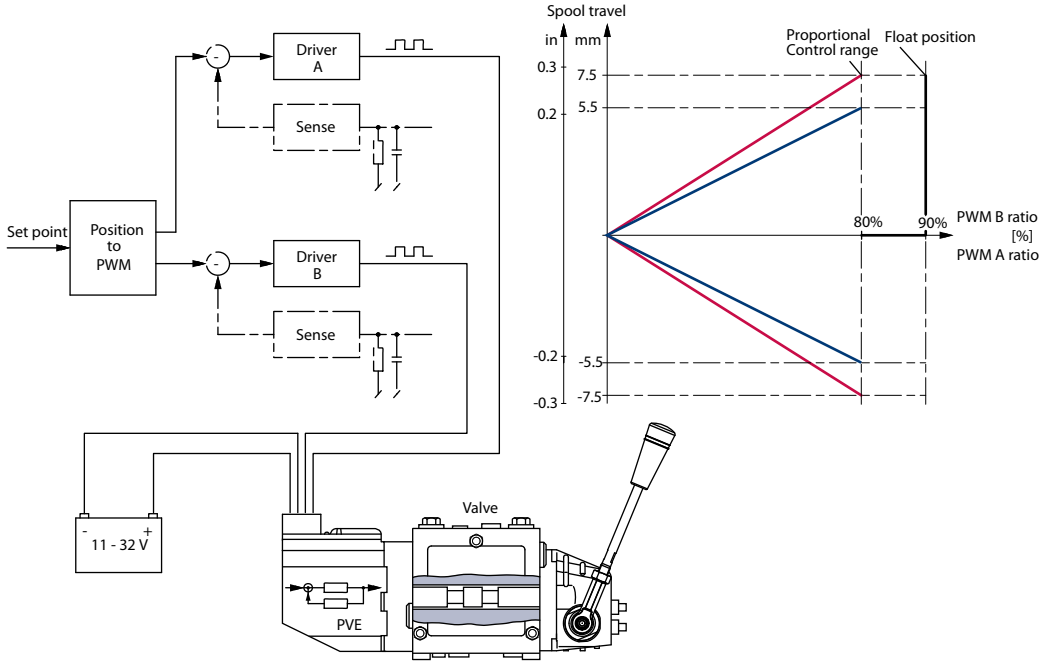

The PVEP functionality includes an electric circuit with a closed-loop logic. An embedded micro-controller processes the signal voltage and the LVDT feedback signal and regulates the solenoid valves accordingly. Features such as active or passive fault monitoring, LED indicating fault state and error output pin are all default PVEP features.

Controlling a PVEP requires two PWM signals. The basic concept between a controller and the PVEP is shown in the picture below. Current control is not possible with PVEP.

It is important that the Power supply (V_{bat}) is connected before the PWM signal. PWM signals are low power voltage signals; hence no current drivers are needed. The PVEP performs a true time difference measurement on the PWM input, thus there is no filtering or conversion involved

PVEP dimensions

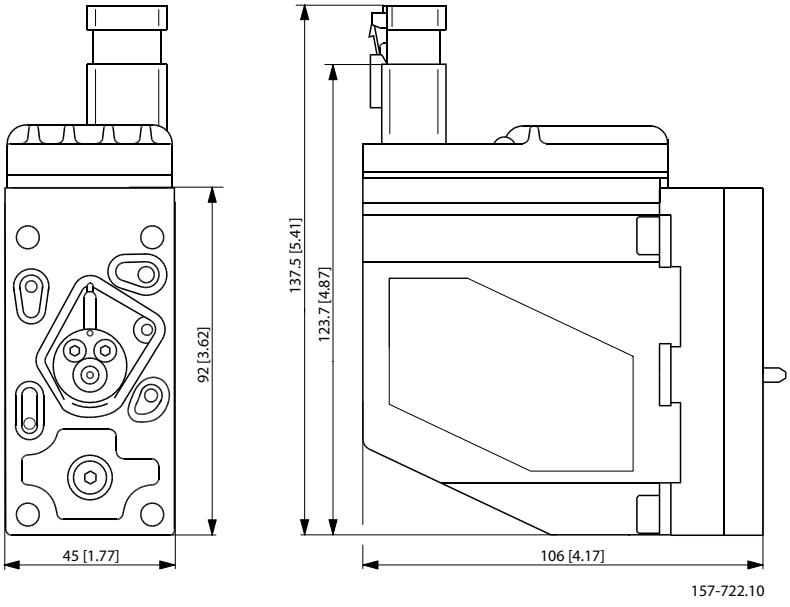

PVE Electro-hydraulic Actuation

Weight: 0.9 kg [1.98 lbs]

All connector terminals are short-circuit protected, protected against reverse connection and their combinations. Connecting error pins from two or more PVE's will cause the surveillance system to malfunction.

PVEP Technical Data

Pilot pressure

Minimum	Nominal	Maximum
10.0 bar [145 psi]	13.5 bar [196 psi]	15.0 bar [218 psi]

Fluid consumption

Neutral	Locked position	Actuating
0.03 l/min [0.106 US gal/min]	0.01 l/min [0.026 US gal/min]	0.8 l/min [0.21 US gal/min]

Fluid temperature

Minimum	Recommended	Maximum	Ambient Recommended
-30°C [-22°F]	30 to 60°C [86 to 140°F]	90° [194°F]	-30 to 60°C [-22 to 140°F]

Fluid viscosity

Operating range	12 to 75 mm^2/s [65 to 347 SUS]
Minimum	4 mm^2/s [39 SUS]
Maximum	460 mm^2/s [2128 SUS]
Cleanliness	18/16/13 (according to ISO 4406)

Control Electric Specification

Supply voltage U_{DC}	range	11 → 32 V
	max. ripple	5%
	over voltage (max. 5 min)	36 V
PWM control range (duty cycle)		10 → 80%
PWM frequency		100 → 1000 Hz
PWM input voltage swing		0 → U_{DC}
PWM Trigger point		70% of U_{DC}
Input impedance (standard pull down)		5 kΩ
Input capacitor		---
Power consumption		7 W
Error voltage	Fault	U_{DC}
	No Fault	< 2 V

LED Characteristic

Color	LED Characteristic	Description
Green constant		No error – Actuating
Green flashing @ 1.5 Hz		Neutral – Power save

PVE Electro-hydraulic Actuation

LED Characteristic (continued)

Color	LED Characteristic	Description
Red constant		Internal error
Red flashing @ 1.5 Hz		External or Float error
Yellow		Disable mode

PVEP 6-pin Connector

Pinout	Pin 1	Pin 2	Pin 3	Pin 4	Pin 5	Pin 6
1x6 DEUTSCH	PWM_A	Error	PWM_B	-	GND	U_{DC}

Part number for PVEP

Part number	Connector	IP	Fault Monitoring
11034832	1x6 DEUTSCH	IP 67	Active

PVE Electro-hydraulic Actuation

PVE Series 5

PVED-CC Series 5

The PVED-CC Series 5 is a high performance digital actuator for the PVG 32 and PVG 100 valves, which can use two different protocols: CANopen and ISObus/J1939.

The PVED-CC Series 5 offers CAN bus control through loop cables simplifying the wire harness and build-in intelligence, where actuator specific features tailor the actuator behavior to the exact function need.

PVED-CC Series 5

PVED-CC S5 schematic

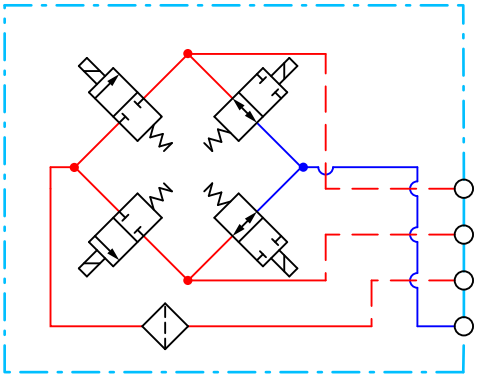

PVED-CC Series 5 dimensions

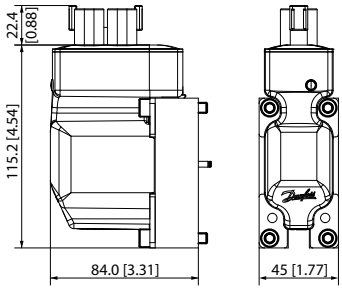

For more information, see *PVED-CC Series 5 CANopen Technical Information*, **BC00000354**.

For more information, see *PVED-CC Series 5 ISObus Technical Information*, **BC00000361**.

PVE Electro-hydraulic Actuation

Operating data overview

Electrical data

Voltage		12 V_{DC}	24 V_{DC}
Current consumption	**Operating**	520 mA	260 mA
	Neutral - Power state	80 mA	45 mA
Energy consumption	**Operating**	6.24 W	6.24 W
	Neutral - Power state	1 W	1.1 W
Supply voltage (V_{bat})	**Nominal**	11 – 32 V_{DC}	
	Range	9 – 35.9 V_{DC}	
	Maximum ripple	5%	
CAN bus	Alive	5.5 – 36 V_{DC}*	

* PVED communicating on CAN bus, but not fully operable.

Temperature range

		Min.	Max.
Temperature	**Ambient**	–40°C	90°C
	Oil		
	Storage		110°C

Hydraulic data

Pilot pressure		13.5 ± 1.5 bar
Tank pressure	**Continues**	25 bar
	Intermittent	40 bar
Oil consumption	**Electrical de-energized**	0 l/min
	Spool locked position	
	Continuous changing spool position	0.7 l/min
Contamination	(ISO 4406)	23/19/16
Viscosity range	**Nominal**	12 – 75 mm^2/s
	Minimum	4.2 – 12 mm^2/s*
	Maximum	75 – 1000 mm^2/s

* PVED have reduced operating performance

Government regulations

Description	Standard
Low Voltage	2006/95/EC
EMC Directive	2004/108/EC
Safety	ISO4413:2010

PVE Electro-hydraulic Actuation

Connectors

Available 2x4 pin connectors: AMP Junior Power Timer andDEUTSCH DT06-4S-E003. Pins are internally connected in pairs between connectors. Mating connectors are not supplied by Danfoss.

AMP connector

AMP Junior Power Timer (2x4 pin)

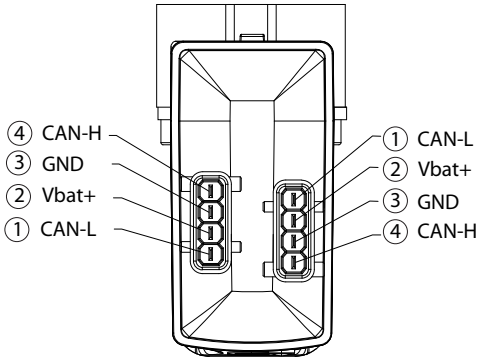

Pinout:
1. CAN Low
2. Vbat+
3. GND
4. CAN High

Terminal	Seal	Housing	IP rating
929930-1 (4 pcs)	828901-1 (4 pcs)	2-967059-1 (gray) or 1-967059-1 (black) *	IP66

* There is no black/gray coding of the connector

DEUTSCH connector

DT06-4S-E003 (2x4 pin)

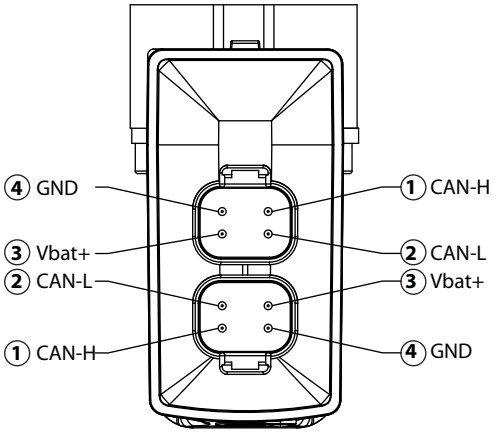

V310451.A

Pinout:
1. CAN High
2. CAN Low
3. Vbat+
4. GND
IP rating: IP67; IP69K without connector

PVE Electro-hydraulic Actuation

LED coloring for PVED-CC Series 5

LED Characteristic

Color	LED Characteristic	Description
Green constant		No error – Actuating
Green flashing @ 1.5 Hz		Neutral – Power save
Red constant		Internal error
Red flashing @ 1.5 Hz		External or Float error
Yellow		Disable mode

PVED-CC Hysteresis and Ripple

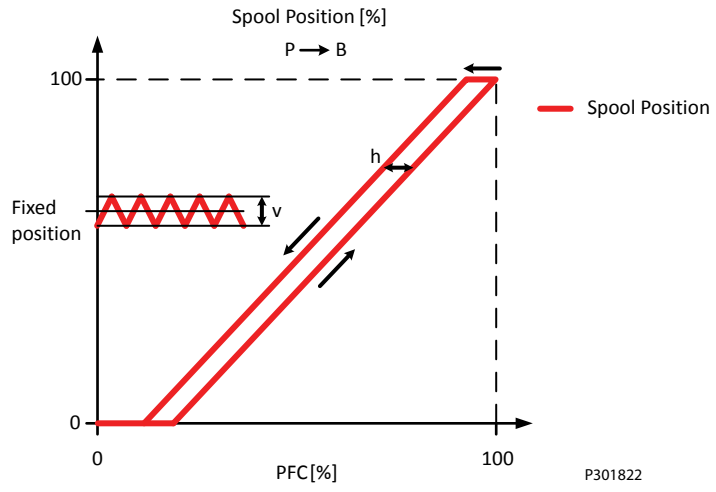

Definition of hysteresis

Hysteresis (h)	Rated [%]	1.45%
Steady state ripple at constant command signal	Rated [%]	0.29%

PVE Electro-hydraulic Actuation

PVED-CC Reaction Times

Reaction times

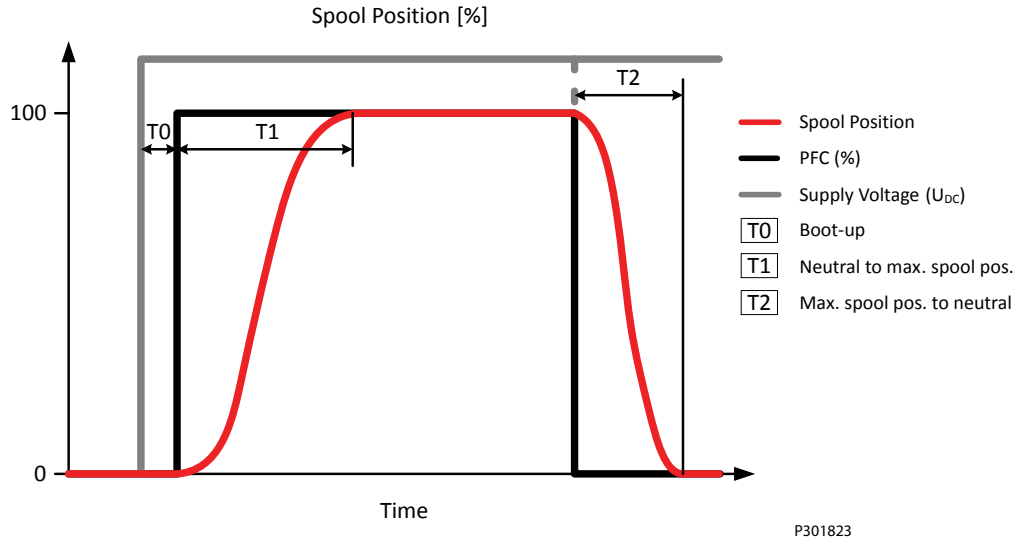

Definition of Step Response

Reaction	Time (nominal)
T0 – Boot-up	440 ms*
T1 – Constant PFC command	177 ms
T2 – Constant PFC command	114 ms

* Including Power-On-Self-Test (POST) and safety sub-system initialization.

The stated values are preliminary values and can be subject to change once an increased statistical basis is achieved.

PVED-CC Part Numbers

PVED-CC part numbers according to connector type (IP67).

Part number	11107869	11107870
Connector type	1x4 DEUTSCH	1x4 AMP

PVE Electro-hydraulic Actuation

PVE Series 7

PVEO

The PVEO actuator is a non-proportional ON/OFF control actuator with open-loop spool control primarily used to control simple ON/OFF work functions where a proportional control of speed or oil flow is not a requirement.

PVEO Series 7

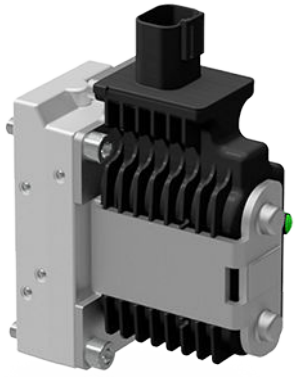

- Neutral position or max. spool stroke according to control signal
- 12 V_{DC} or 24 V_{DC} supply voltage
- DEUTSCH, AMP or DIN/Hirschman connectors
- Standard PVE pilot oil pressure of 13.5 bar [196 psi]
- LED only indicating Power ON or Power OFF
- Ramp (-R) or Direction Indication output (-DI) functionality

Functionality principle

PVEO-DI functionality

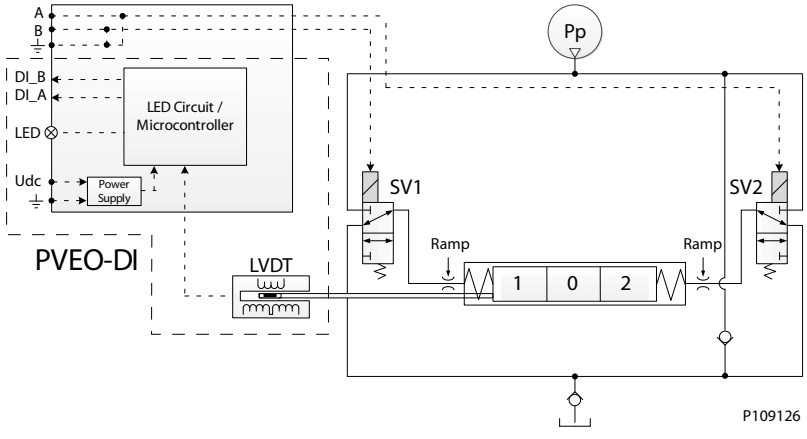

The standard PVEO/PVEO-HP functionality includes the simplest electric circuit of the PVE actuator program, using a fixed 12 V_{DC} or 24 V_{DC} supply voltage or signal voltage and a simple LED circuit to control the LED light indicating Power ON/OFF.

The PVEO-DI variant includes an LVDT spool position monitor and a more advanced electric circuit with an embedded micro-controller and separate power supply to handle the Direction Indication functionality.

PVE Electro-hydraulic Actuation

An energization of solenoid valve SV1 and a simultaneous de-energization of SV2 will cause the main spool to move to the right direction and vice versa. If both SV1 and SV2 are energized or de-energized simultaneously, the main spool stays locked in its neutral position.

PVEO/PVEO-DI schematic

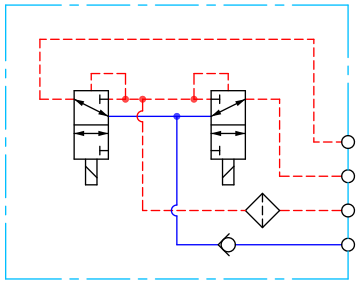

P109195

PVEO-R schematic

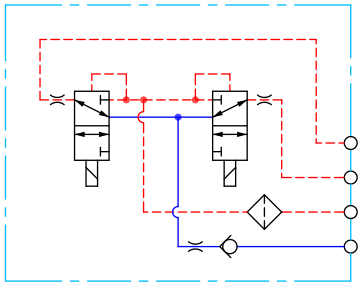

P109200

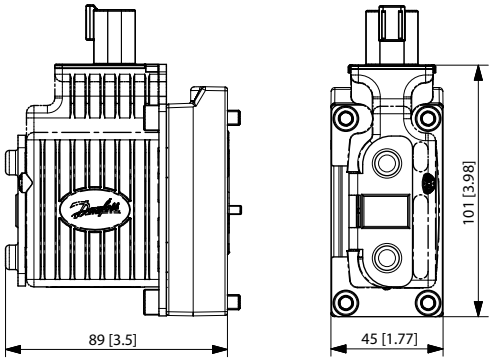

Connector height and weight

DEUTSCH	AMP	DIN	Weight
30 mm [1.2 in]	38 mm [1.5 in]	40 mm [1.6 in]	0.7 kg [1.54 lb]

PVE Electro-hydraulic Actuation

PVEO Technical Data

Control Specifications

Description	Type	12 V_{DC}	24 V_{DC}
Supply Voltage (U_{DC})	Range	11 to 15 V_{DC}	22 to 30 V_{DC}
	Max. ripple	5%	5%
Current Consumption	Typical	480 mA	250 mA
	Minimum	430 mA	220 mA
	Maximum	950 mA	480 mA

Pilot pressure

Minimum	Nominal	Maximum
10.0 bar [145 psi]	13.5 bar [196 psi]	15.0 bar [218 psi]

Fluid consumption

Neutral/Locked position	Actuating (PVEO-R)	Actuating
0 l/min	0.3 l/min [0.08 US gal/min]	0.9 l/min [0.24 US gal/min]

Technical specification

Parameter	Minimum	Recommended range	Maximum
Fluid viscosity	4 mm^2/s [39 SUS]	12 to 75 mm^2/s [65 to 347 SUS]	460 mm^2/s [2128 SUS]
Fluid cleanliness	18/16/13 (according to ISO 4406)		
Storage temperature	Ambient: -50 to 90°C [-58 to 194°F]		
Operating temperature	Ambient: -30 to 60°C [-22 to 140°F]		

LED characteristic

Color	LED characteristic	Description
Green constant		Power ON

PVE Electro-hydraulic Actuation

PVEO Reaction Times

Reaction times

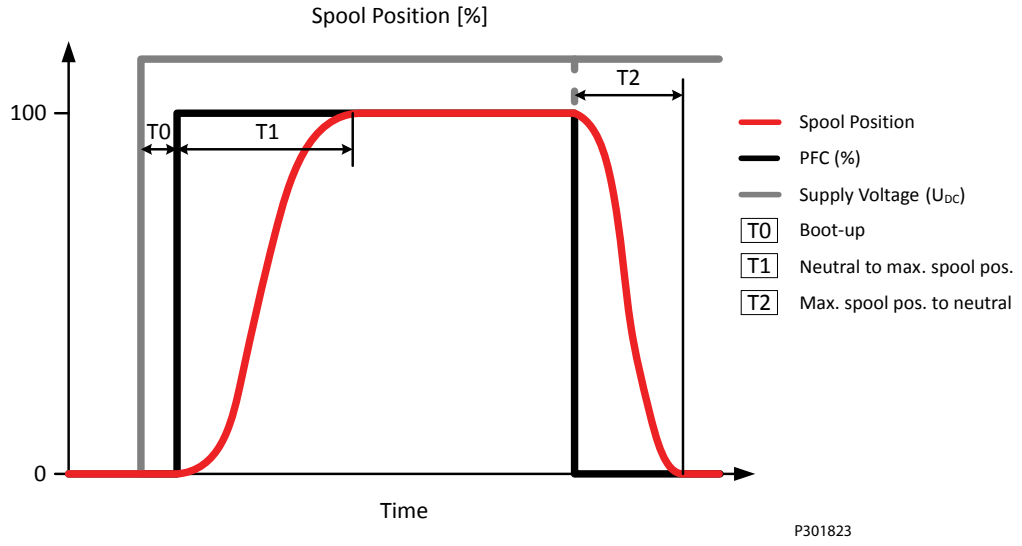

Definition of Step Response

Reaction	PVEO PVEO-DI	PVEO-R
T0 – Boot-up	0	0
T1 – Neutral to max. spool stroke @ Power ON/ @ Constant U_{DC}	110 ms	300 ms
T2 – Max. spool stroke to neutral @ Power OFF/@ Constant U_{DC}	110 ms	110 ms

The stated values are preliminary values and can be subject to change once an increased statistical basis is achieved.

PVEO Part Numbers

Part numbers for PVEO and PVEO-DI

Part number	Type	Connector	Protection Class	Voltage	Interface
11166843	PVEO	1x4 DEU	IP 67	12 V_{DC}	Standard
11166838		1x4 DEU	IP 67	24 V_{DC}	
11166866		1x4 AMP	IP 66	12 V_{DC}	
11166837		1x4 AMP	IP 66	24 V_{DC}	
11166836		1x4 DIN	IP 65	12 V_{DC}	
11166743		1x4 DIN	IP 65	24 V_{DC}	
111687401*	PVEO-DI	2x4 AMP	IP 66	12 V_{DC}	
111668691*		2x4 AMP	IP 66	24 V_{DC}	

PVE Electro-hydraulic Actuation

Part numbers for PVEO and PVEO-DI (continued)

Part number	Type	Connector	Protection Class	Voltage	Interface
11166753	PVEO-R	1x4 DEU	IP 67	12 V_{DC}	Ramp
11166754		1x4 DEU	IP 67	24 V_{DC}	
11166867		1x4 AMP	IP 66	12 V_{DC}	
11166776		1x4 AMP	IP 66	24 V_{DC}	
11166831		1x4 DIN	IP 65	12 V_{DC}	
11166908		1x4 DIN	IP 65	24 V_{DC}	

* Includes Direction Indication special features.

PVE Electro-hydraulic Actuation

PVEO-HP

The PVEO-HP actuator is a non-proportional ON/OFF control actuator with open-loop spool control primarily used to control simple ON/OFF work functions where a proportional control of speed or oil flow is not a requirement.

PVEO-HP

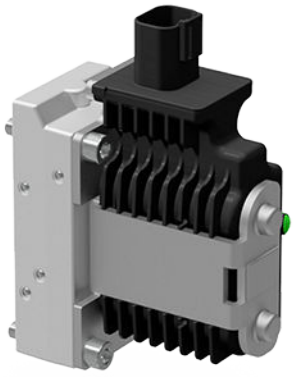

All variants are available with following features:

- Neutral position or max. spool stroke according to control signal
- 12 V_{DC} or 24 V_{DC} supply voltage
- DEUTSCH, AMP or DIN/Hirschman connectors
- PVH/PVHC pilot oil pressure of 25 bar [362.6 psi]
- LED only indicating Power ON or Power OFF

PVEO-HP functionality diagram

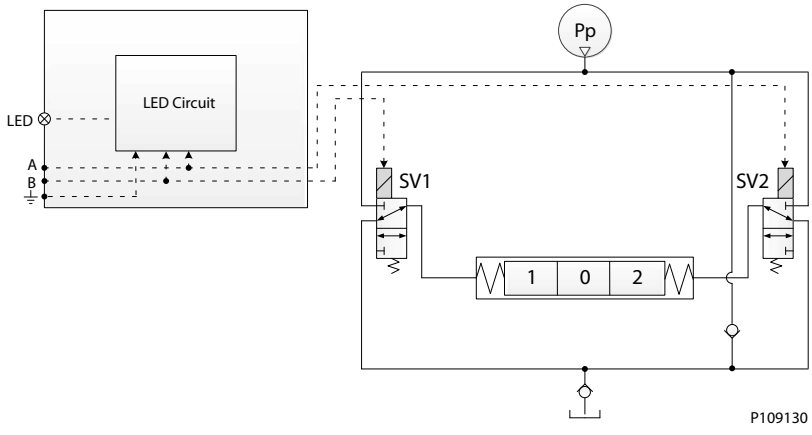

The standard PVEO/PVEO-HP functionality includes the simplest electric circuit of the PVE actuator program, using a fixed 12 V_{DC} or 24 V_{DC} supply voltage or signal voltage and a simple LED circuit to control the LED light indicating Power ON/OFF.

An energization of solenoid valve SV1 and a simultaneous de-energization of SV2 will cause the main spool to move to the right direction and vice versa. If both SV1 and SV2 are energized or de-energized simultaneously, the main spool stays locked in its neutral position.

PVE Electro-hydraulic Actuation

PVEO-HP Schematic

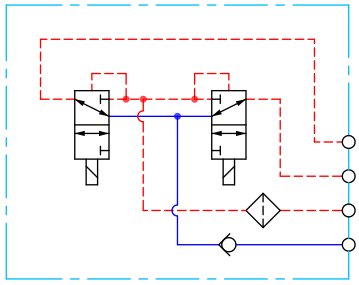

P109195

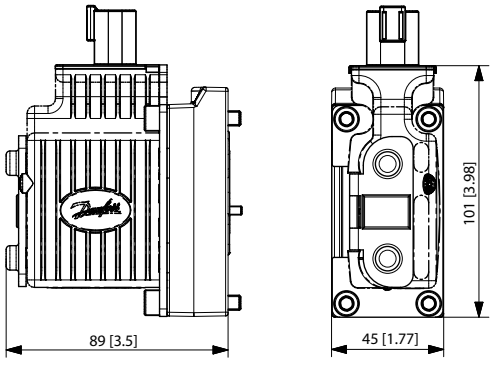

Connector height and weight

DEUTSCH	AMP	DIN	Weight
30 mm [1.2 in]	38 mm [1.5 in]	40 mm [1.6 in]	0.7 kg [1.54 lb]

PVEO-HP Technical Data

Control Specification

Description	Type	12 V_{DC}	24 V_{DC}
Supply Voltage (U_{DC})	Range	11 to 15 V_{DC}	22 to 30 V_{DC}
	Max. ripple	5%	
Current Consumption	Typical	750 mA	380 mA
	Minimum	660 mA	340 mA
	Maximum	1460 mA	740 mA

Technical data

Pilot pressure	Nominal	25 bar [363 psi]
	Minimum	21 bar [305 psi]
	Maximum	25 bar [363 psi]
Fluid consumption	Neutral	0 l/min [0 US gal/min]
	Locked position	0 l/min [0 US gal/min]
	Actuating	0.9 l/min [0.24 US gal/min]

PVE Electro-hydraulic Actuation

Technical specification

Parameter	Minimum	Recommended range	Maximum
Fluid viscosity	4 mm^2/s [39 SUS]	12 to 75 mm^2/s [65 to 347 SUS]	460 mm^2/s [2128 SUS]
Fluid cleanliness	18/16/13 (according to ISO 4406)		
Storage temperature	Ambient: -50 to 90°C [-58 to 194°F]		
Operating temperature	Ambient: -30 to 60°C [-22 to 140°F]		

LED characteristic

Color	LED characteristic	Description
Green constant		Power ON

PVEO-HP Reaction Times

Reaction times

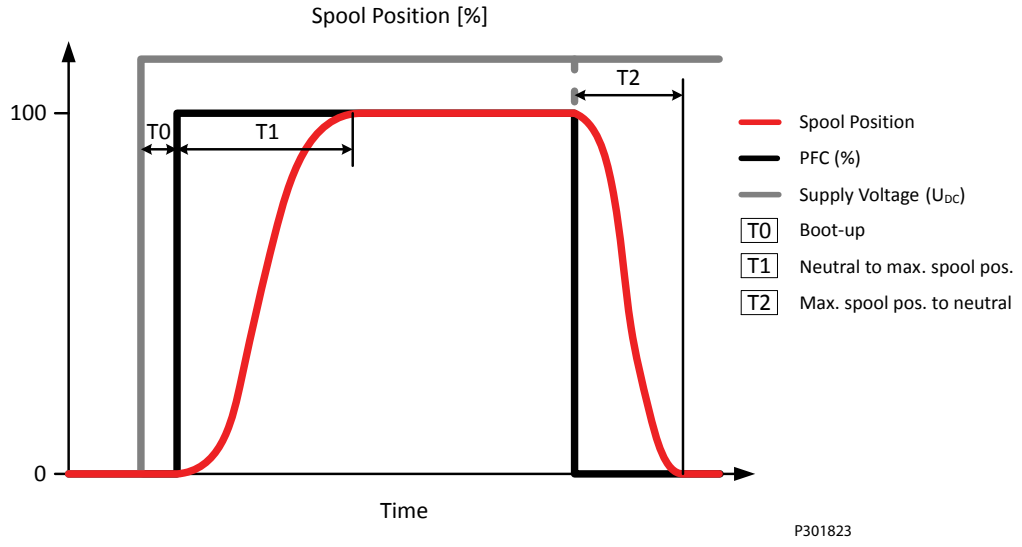

Definition of Step Response

Reaction	PVEO-HP
T0 – Boot-up	0
T1 – Neutral to max. spool stroke @ Power ON/@ Constant U_{DC}	90 ms
T2 – Max. spool stroke to neutral @ Power OFF/@ Constant U_{DC}	70 ms

The stated values are preliminary values and can be subject to change once an increased statistical basis is achieved.

PVE Electro-hydraulic Actuation

PVEO-HP Part Numbers

PVEO-HP Standard Part Numbers

Part number	Connector	IP	U_{DC}	Functionality
11166765	1x4 DEUTSCH	IP 67	12 V_{DC}	Standard
11166766	1x4 DEUTSCH	IP 67	24 V_{DC}	
11166763	1x4 AMP	66	12 V_{DC}	
11187524	1x4 AMP	66	24 V_{DC}	
11187551	1x4 DIN	65	12 V_{DC}	
11187562	1x4 DIN	65	24 V_{DC}	

PVE Electro-hydraulic Actuation

PVEM

The PVEM actuator is a proportional control actuator with closed-loop spool control primarily used to control work functions with medium performance requirements. The PVEM is available in three different performance variants, the standard PVEM, the PVEM-R with ramp and the PVEM-Q with quick reaction.

PVEM

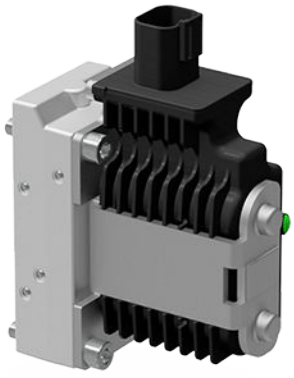

Variants are available with following features:

- 9–32 V_{DC} multi-voltage power supply
- Analog voltage control signal 25–75% of supply voltage
- DIN or Hirschman connectors
- Standard PVE pilot oil pressure of 13.5 bar [196 psi]
- LED indicating error state and passive fault monitoring
- Float (-F), quick Ramp (-R) or Quick reaction functionality (-Q)

PVEM functionality

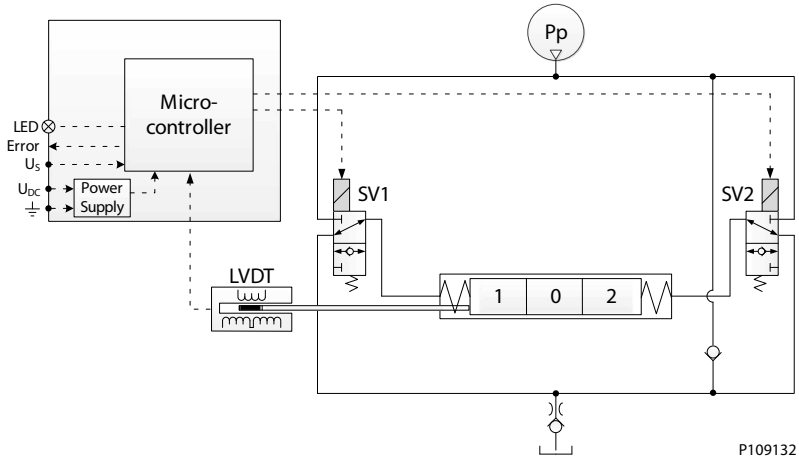

The PVE functionality includes an electric circuit with a closed-loop logic. An embedded micro-controller processes the signal voltage and the LVDT feedback signal and regulates the solenoid valves accordingly.

An energization of solenoid valve SV1 and a simultaneous de-energization of SV2 will cause the main spool to move to the right direction and vice versa. If both SV1 and SV2 are energized or de-energized simultaneously, the main spool stays locked in its neutral position.

PVE Electro-hydraulic Actuation

Schematics

PVEM

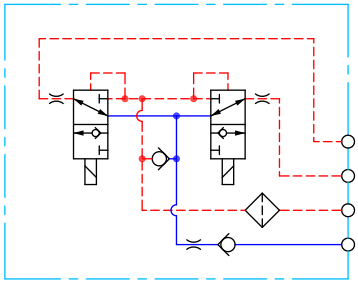

P109196

PVEM-Q

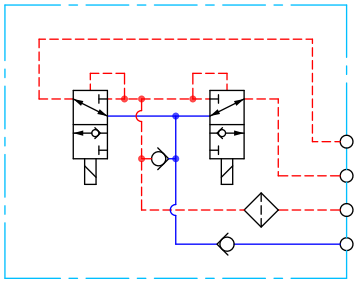

P109201

Dimensions

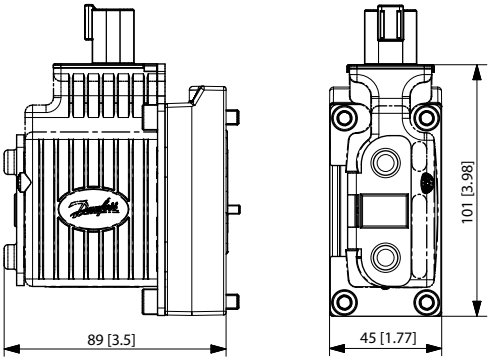

Connector height and weight

DEUTSCH	AMP	DIN	Weight
30 mm [1.2 in]	38 mm [1.5 in]	40 mm [1.6 in]	0.7 kg [1.54 lb]

PVEM Technical Data

Control Specification

Description	Type	Value
Supply Voltage (U_{DC})	Rated Range	11 to 32 V_{DC}
	Max. ripple	5%
Signal Voltage PWM (U_S)	Neutral	$U_S = 0.5\ U_{DC} = 50\%$ DUT
	Q: P to A	$U_S = (0.5 \text{ to } 0.25)\ U_{DC} = 50\% \text{ to } 25\%$ DUT
	Q: P to B	$U_S = (0.5 \text{ to } 0.75)\ U_{DC} = 50\% \text{ to } 75\%$ DUT
Input Impedance	Rated	12 kΩ
Input Capacitance	Rated	100 nF

Current consumption

Description	@ 12 V_{DC}	@ 24 V_{DC}
PWM Frequency (U_S) recommended	> 200 Hz	> 200 Hz
Current Consumption	690 mA	350 mA

PVE Electro-hydraulic Actuation

Pilot pressure

Minimum	Nominal	Maximum
10.0 bar [145 psi]	13.5 bar [196 psi]	15.0 bar [218 psi]

Fluid consumption

Neutral/Locked position	Actuating (PVEM-R)	Actuating (PVEM-Q)	Actuating
0 l/min	0.3 l/min	1.0 l/min [0.26 US gal/min][0.08 US gal/min]	0.5 l/min [0.13 US gal/min]

Technical specification

Parameter	Minimum	Recommended range	Maximum
Fluid viscosity	4 mm^2/s [39 SUS]	12 to 75 mm^2/s [65 to 347 SUS]	460 mm^2/s [2128 SUS]
Fluid cleanliness	18/16/13 (according to ISO 4406)		
Storage temperature	Ambient: -50 to 90°C [-58 to 194°F]		
Operating temperature	Ambient: -30 to 60°C [-22 to 140°F]		

LED characteristic

Color	LED characteristic	Description
Green constant		No error – Actuating
Green flashing @ 1.5 Hz		Neutral – Power save
Red constant		Internal error
Red flashing @ 1.5 Hz		External or Float error

PVEM Reaction Times

Reaction times

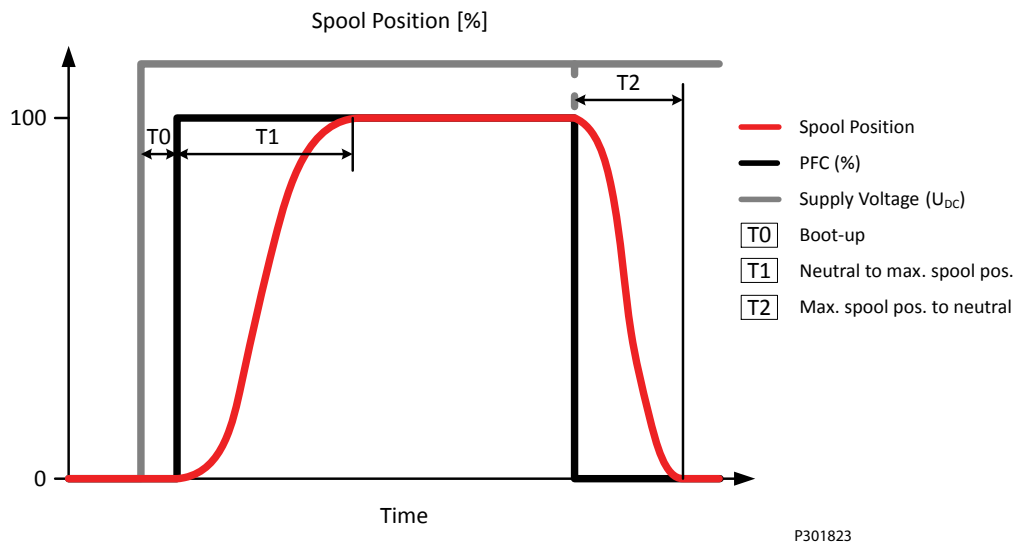

PVE Electro-hydraulic Actuation

Definition of Step Response

Reaction	PVEM-R	PVEM-FLB	PVEM-Q
T0 – Boot-up	15 ms	15 ms	15 ms
T1 – Neutral to max. spool stroke @ Power ON	325 ms	225 ms	125 ms
T2 – Max. spool stroke to neutral @ Power OFF	110 ms	110 ms	110 ms
T1 – Neutral to max. spool stroke @ Constant U_{DC}	310 ms	210 ms	110 ms
T2 – Max. spool stroke to neutral @ Constant U_{DC}	90 ms	90 ms	90 ms

The stated values are preliminary values and can be subject to change once an increased statistical basis is achieved.

PVE Hysteresis and Ripple

PVE hysteresis overview

PVE type	PVEP, PVES PVEH	PVEA	PVEM
Hysteresis (h)	<0.5 %	2 %	15 %
Steady state ripple @constant Us	0.2 mm	0.3 mm	0.0 mm

PVEM part numbers

Part numbers for PVEM variants with Passive Fault Monitoring; IP rating IP65 and DIN 1x4 connector.

Part numbers for PVEM variants

Part number	Type	Functionality
11166829	PVEM	Standard
11166852	PVEM-FLB	Float B-port
11166845	PVEM-R	Ramp
11166853	PVEM-Q	Quick Reaction

PVE Electro-hydraulic Actuation

PVEA

The PVEA actuator is a proportional control actuator with a closed-loop spool control primarily used to control work functions with above medium performance requirements.

PVEA

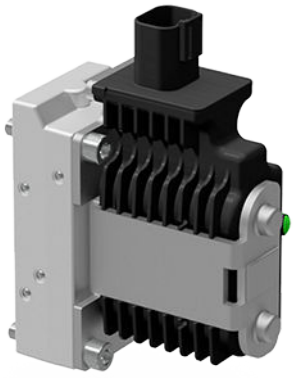

- 9–32 V_{DC} multi-voltage power supply
- Analog voltage control signal 25–75% of supply voltage
- Standard PVE pilot oil pressure of 13.5 bar [196 psi]
- DEUTSCH, AMP or DIN/Hirschman connectors
- LED indicating error state and active or passive fault monitoring
- Direction Indication output (-DI) or Neutral Power-Off (-NP) functionality

PVEA-DI functionality

PVEA-DI functionality

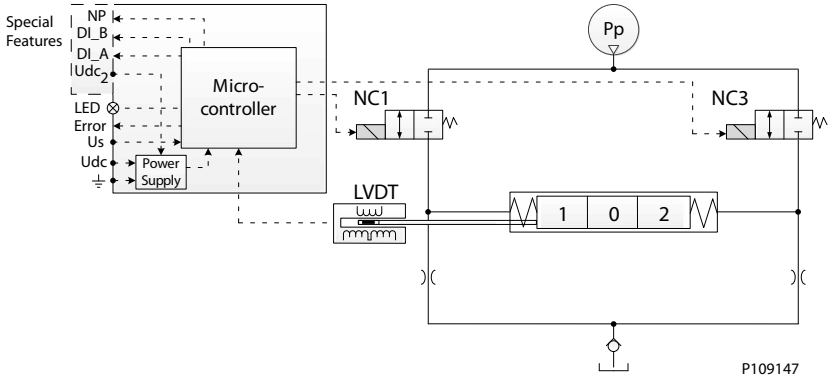

The PVE functionality includes an electric circuit with a closed-loop logic. An embedded micro-controller processes the signal voltage and the LVDT feedback signal and regulates the solenoid valves accordingly.

A continuous modulation of solenoid valve NC1 and a simultaneous de-energization of NC3 causes the main spool to move to the right direction and vice versa. When the main spool is stroked to the far right, a simultaneous modulation of both NC1 and NC3 balances the main spool in its stroked position. The main spool oscillates in its stroked position at a frequency corresponding to the modulation frequency. When both NC1 and NC3 are de-energized, the main spool moves back to its neutral position by means of the main spool neutral spring and the hydraulic principle.

PVE Electro-hydraulic Actuation

PVEA Technical Data

Control Specification

Description	Type	Value
Supply Voltage (U_{DC})	Rated Range	11 to 32 V_{DC}
	Max. ripple	5%
Signal Voltage PWM (U_S)	Neutral	$U_S = 0.5\ U_{DC} = 50\%$ DUT
	Q: P to A	$U_S = (0.5 \text{ to } 0.25)\ U_{DC} = 50\% \text{ to } 25\%$ DUT
	Q: P to B	$U_S = (0.5 \text{ to } 0.75)\ U_{DC} = 50\% \text{ to } 75\%$ DUT
Input Impedance	Rated	12 kΩ
Input Capacitance	Rated	100 nF

Current consumption

Description	@ 12 V_{DC}	@ 24 V_{DC}
PWM Frequency (U_S) recommended	> 1000 Hz	> 1000 Hz
Current Consumption	290 mA	150 mA

Pilot pressure

Minimum	Nominal	Maximum
10.0 bar [145 psi]	13.5 bar [196 psi]	15.0 bar [218 psi]

Fluid consumption

Neutral	Locked position	Actuating
0 l/min	0 l/min	1.0 l/min [0.26 US gal/min]

Technical specification

Parameter	Minimum	Recommended range	Maximum
Fluid viscosity	4 mm^2/s [39 SUS]	12 to 75 mm^2/s [65 to 347 SUS]	460 mm^2/s [2128 SUS]
Fluid cleanliness	18/16/13 (according to ISO 4406)		
Storage temperature	Ambient: -50 to 90°C [-58 to 194°F]		
Operating temperature	Ambient: -30 to 60°C [-22 to 140°F]		

LED characteristic

Color	LED characteristic	Description
Green constant		No error – Actuating
Green flashing @ 1.5 Hz		Neutral – Power save
Red constant		Internal error
Red flashing @ 1.5 Hz		External or Float error

PVE Electro-hydraulic Actuation

PVEA Reaction Times

Reaction times

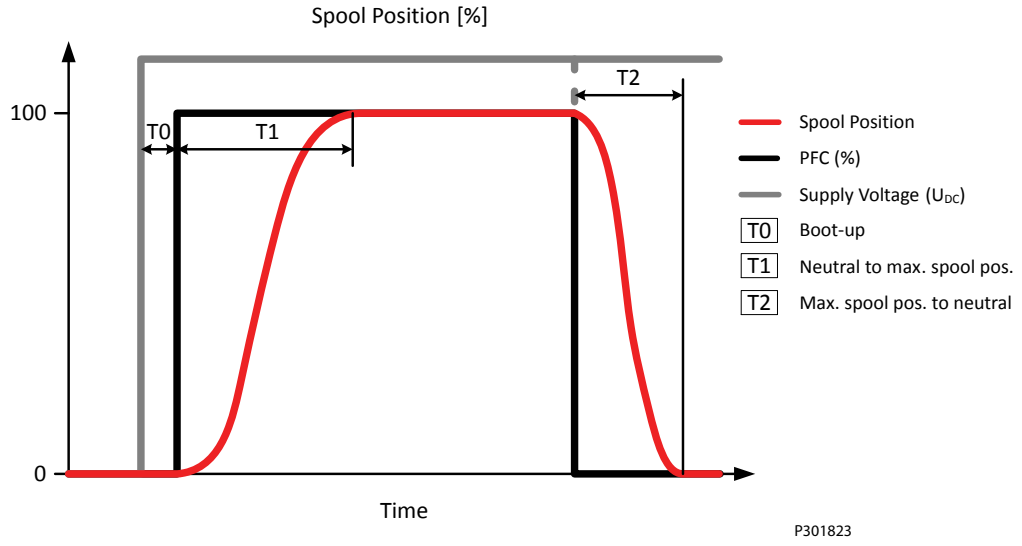

Reaction	PVEA
T0 – Boot-up [ms]	15 ms
T1 – Neutral to max. spool stroke @ Power ON	280 ms
T2 – Max. spool stroke to neutral @ Power OFF	200 ms
T1 – Neutral to max. spool stroke @ Constant U_{DC}	265 ms
T2 – Max. spool stroke to neutral @ Constant U_{DC}	200 ms

The stated values are preliminary values and can be subject to change once an increased statistical basis is achieved.

PVE Hysteresis and Ripple

PVE hysteresis overview

PVE type	PVEP, PVES PVEH	PVEA	PVEM
Hysteresis (h)	<0.5 %	2 %	15 %
Steady state ripple @constant Us	0.2 mm	0.3 mm	0.0 mm

PVEA part numbers

Part numbers for PVEA variants with Standard Functionality.

Part numbers for PVEA variants

Part number	Type	Connector	IP rating	Fault Monitoring
11177346	PVEA	1x4 DEU	IP67	Passive
11177347	PVEA		IP67	Active
11177353	PVEA	1x4 AMP	IP66	Passive
11177348	PVEA		IP66	Active
11177345	PVEA-NP[1)]	1x6 DEU	IP67	Passive
11177357	PVEA-DI[2)]	2x4 DEU	IP67	Active

PVE Electro-hydraulic Actuation

Part numbers for PVEA variants (continued)

Part number	Type	Connector	IP rating	Fault Monitoring
11177356	PVEA-DI[2]	2x4 AMP	IP66	Passive
11177355	PVEA-DI[2]		IP66	Active

[1] Neutral Power-Off special features.

[2] Direction Indication special features.

PVE Electro-hydraulic Actuation

PVEH

The PVEH actuator is a proportional control actuator with closed-loop spool control primarily used to control work functions with high performance requirements.

PVEH

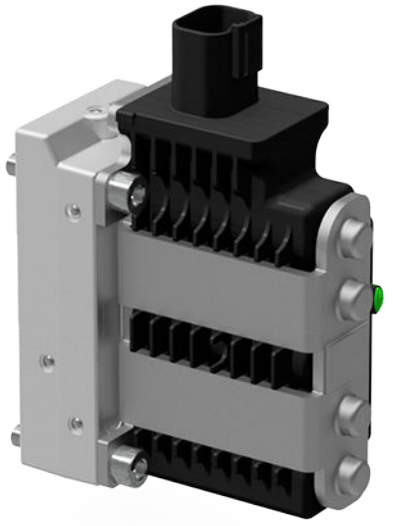

- 9–32 V_{DC} multi-voltage power supply
- Analog voltage control signal 25–75% of supply voltage
- Standard PVE pilot oil pressure of 13.5 bar [196 psi]
- DEUTSCH, AMP or DIN/Hirschman connectors
- LED indicating error state and active or passive fault monitoring
- Float (-F), Direction Indication output (-DI), Neutral Power-Off (-NP), Spool Position output (-SP) or 0-10 V_{DC} control signal (-U) functionality

PVEH functionality

The PVE functionality includes an electric circuit with a closed-loop logic. An embedded micro-controller processes the signal voltage and the LVDT feedback signal and regulates the solenoid valves accordingly.

A continuous modulation of solenoid valves NC1 and NO4 together with a simultaneous energization of NO2 and de-energization of NC3 causes the main spool to move to the right direction and vice versa. When the main spool is stroked to the far right, a simultaneous energization of both NO2 and NO4 and de-energization of both NC1 and NC3 balances the main spool in its stroked position. An emergency stop activated when the spool is stroked will cause all solenoid valves to de-energize causing the main spool to move back to its neutral position by means of the main spool neutral spring and the hydraulic principle.

PVEH Technical Data

Control Specification

Description	Type	Value
Supply Voltage (U_{DC})	Rated Range	11 to 32 V_{DC}
	Max. ripple	5%
Signal Voltage PWM (U_S)	Neutral	U_S = 0.5 U_{DC} = 50% DUT
	Q: P to A	U_S = (0.5 to 0.25) U_{DC} = 50% to 25% DUT
	Q: P to B	U_S = (0.5 to 0.75) U_{DC} = 50% to 75% DUT

PVE Electro-hydraulic Actuation

Control Specification (continued)

Description	Type	Value
Input Impedance	Rated	12 kΩ
Input Capacitance	Rated	100 nF

Current consumption

Description	@ 12 V_{DC}	@ 24 V_{DC}
PWM Frequency (U_S) recommended	> 1000 Hz	> 1000 Hz
Current Consumption	540 mA	270 mA
Max. DI Current	200 mA	200 mA

Pilot pressure

Minimum	Nominal	Maximum
10.0 bar [145 psi]	13.5 bar [196 psi]	15.0 bar [218 psi]

Fluid consumption

Neutral	Locked position	Actuating
0.0 l/min	0.0 l/min	0.7 l/min [0.18 US gal/min]

Technical specification

Parameter	Minimum	Recommended range	Maximum
Fluid viscosity	4 mm^2/s [39 SUS]	12 to 75 mm^2/s [65 to 347 SUS]	460 mm^2/s [2128 SUS]
Fluid cleanliness	18/16/13 (according to ISO 4406)		
Storage temperature	Ambient: -50 to 90°C [-58 to 194°F]		
Operating temperature	Ambient: -30 to 60°C [-22 to 140°F]		

LED Characteristic

Color	LED Characteristic	Description
Green constant		No error – Actuating
Green flashing @ 1.5 Hz		Neutral – Power save
Red constant		Internal error
Red flashing @ 1.5 Hz		External or Float error
Yellow		Disable mode

PVE Electro-hydraulic Actuation

PVEH Reaction Times

Reaction times

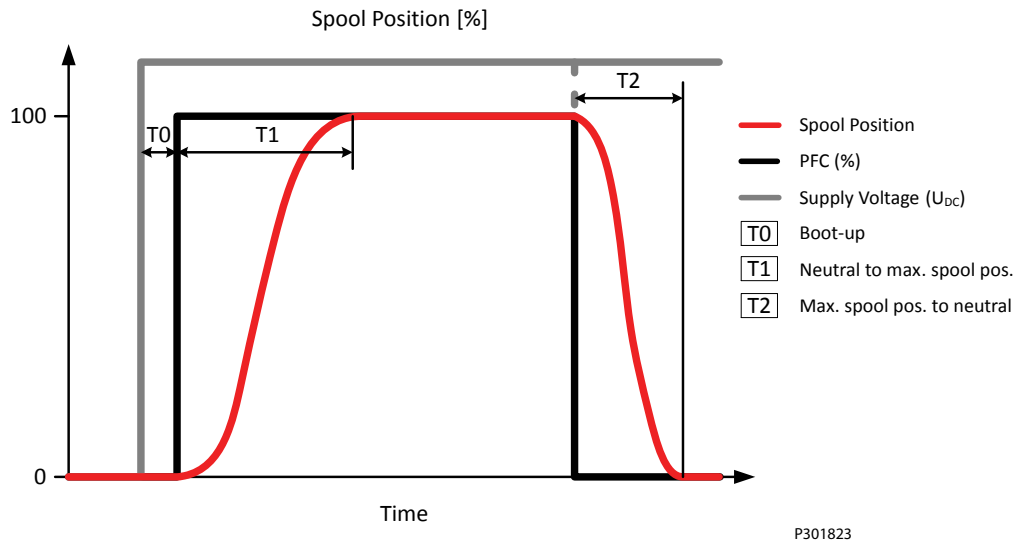

Reaction	PVEH
T0 – Boot-up [ms]	15 ms
T1 – Neutral to max. spool stroke @ Power ON [ms]	125 ms
T2 – Max. spool stroke to neutral @ Power OFF [ms]	110 ms
T1 – Neutral to max. spool stroke @ Constant U_{DC} [ms]	110 ms
T2 – Max. spool stroke to neutral @ Constant U_{DC} [ms]	90 ms

The stated values are preliminary values and can be subject to change once an increased statistical basis is achieved.

PVE Hysteresis and Ripple

PVE hysteresis overview

PVE type	PVEP, PVES PVEH	PVEA	PVEM
Hysteresis (h)	<0.5 %	2 %	15 %
Steady state ripple @constant Us	0.2 mm	0.3 mm	0.0 mm

PVEH Part Numbers

Part numbers for PVEH variants

Part number	Type	Connector	IP class	Fault Monitoring	Functionality
11166732	PVEH	1x4 DEUTSCH	IP67	Passive	Standard
11166775	PVEH	1x4 DEUTSCH	IP67	Active	
11166825	PVEH	1x4 AMP	IP66	Passive	
11166818	PVEH	1x4 AMP	IP66	Active	
11166824	PVEH	1x4 DIN	IP65	Passive	
11166817	PVEH	1x4 DIN	IP65	Active	

PVE Electro-hydraulic Actuation

Part numbers for PVEH variants (continued)

Part number	Type	Connector	IP class	Fault Monitoring	Functionality
11166832[1)]	PVEH-U	1x4 AMP	IP66	Passive	Fixed U_S 0-10 V_{DC}
11166821[1)]	PVEH-U	1x4 AMP	IP66	Active	
11166770[1)]	PVEH-U	1x4 DIN	IP65	Passive	
11166772[1)]	PVEH-U	1x4 DIN	IP65	Active	
11166840	PVEH-FLB	1x4 DEUTSCH	IP67	Passive	Float B-port
11166742	PVEH-FLB	1x4 DEUTSCH	IP67	Active	
11166839	PVEH-FLB	1x4 DIN	IP65	Active	
11166841[2)]	PVEH-FLA	1x6 DIN	IP67	Active	Float A-port
11168738[2)]	PVEH-FLA	1x6 AMP	IP66	Passive	
11168739[2)]	PVEH-FLA	1x6 AMP	IP66	Active	
11166773[3)]	PVEH-SP	1x6 DEUTSCH	IP67	Active	Standard
11166750[4)]	PVEH-NP	1x6 DEUTSCH	IP67	Fast active	
11166835[5)]	PVEH-DI	2x4 DEUTSCH	IP67	Active	
11166820[5)]	PVEH-DI	2x4 AMP	IP66	Passive	
11166819[5)]	PVEH-DI	2x4 AMP	IP66	Active	

[1)] Includes **Disable Mode** special feature

[2)] Includes **Dedicated Float** Pin (UF) special feature

[3)] Includes **Spool Position** special feature

[4)] Includes **Neutral Power-OFF** special feature

[5)] Includes **Direction Indication** special feature

PVE Electro-hydraulic Actuation

PVES

The PVES actuator is a proportional control actuator with closed-loop spool control primarily used to control work functions with very high performance requirements.

PVES

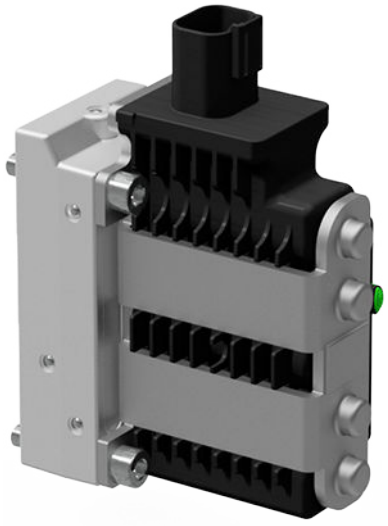

- 9–32 V_{DC} multi-voltage power supply
- Analog voltage control signal 25–75% of supply voltage
- Standard PVE pilot oil pressure of 13.5 bar [196 psi]
- DEUTSCH, AMP or DIN/Hirschman connectors
- LED indicating error state and active or passive fault monitoring
- Spool Position output (-SP) or 0-10 V_{DC} control signal (-U) functionality

PVES functionality

PVES functionality

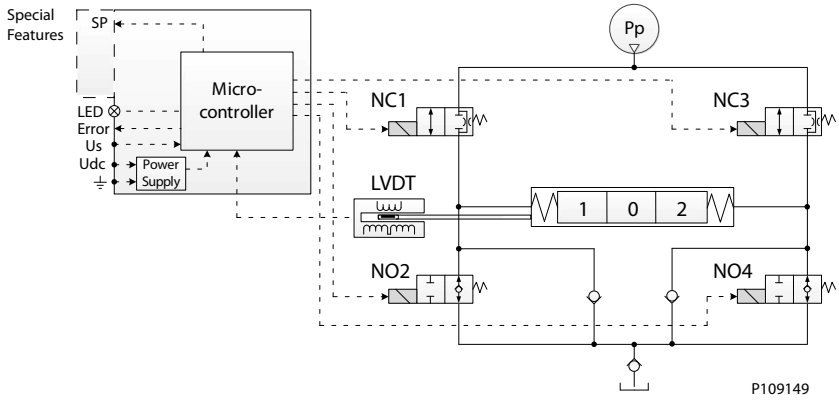

The PVE functionality includes an electric circuit with a closed-loop logic. An embedded micro-controller processes the signal voltage and the LVDT feedback signal and regulates the solenoid valves accordingly.

A continuous modulation of solenoid valves NC1 and NO4 together with a simultaneous energization of NO2 and de-energization of NC3 causes the main spool to move to the right direction and vice versa. When the main spool is stroked to the far right, a simultaneous energization of both NO2 and NO4 and de-energization of both NC1 and NC3 balances the main spool in its stroked position. An emergency stop

PVE Electro-hydraulic Actuation

activated when the spool is stroked will cause all solenoid valves to de-energize causing the main spool to move back to its neutral position by means of the main spool neutral spring and the hydraulic principle.

PVES Technical Data

Control Specification

Description	Type	Value
Supply Voltage (U_{DC})	Rated Range	11 to 32 V_{DC}
	Max. ripple	5%
Signal Voltage PWM (U_S)	Neutral	$U_S = 0.5\ U_{DC} = 50\%$ DUT
	Q: P to A	$U_S = (0.5 \text{ to } 0.25)\ U_{DC} = 50\% \text{ to } 25\%$ DUT
	Q: P to B	$U_S = (0.5 \text{ to } 0.75)\ U_{DC} = 50\% \text{ to } 75\%$ DUT
Input Impedance	Rated	12 kΩ
Input Capacitance	Rated	100 nF

Current consumption

Description	@ 12 V_{DC}	@ 24 V_{DC}
PWM Frequency (U_S) recommended	> 1000 Hz	> 1000 Hz
Current Consumption	560 mA	280 mA

Pilot pressure

Minimum	Nominal	Maximum
10.0 bar [145 psi]	13.5 bar [196 psi]	15.0 bar [218 psi]

Fluid consumption

Neutral	Locked position	Actuating
0.03 l/min [0.106 US gal/min]	0.01 l/min [0.026 US gal/min]	0.8 l/min [0.21 US gal/min]

Technical specification

Parameter	Minimum	Recommended range	Maximum
Fluid viscosity	4 mm^2/s [39 SUS]	12 to 75 mm^2/s [65 to 347 SUS]	460 mm^2/s [2128 SUS]
Fluid cleanliness	18/16/13 (according to ISO 4406)		
Storage temperature	Ambient: -50 to 90°C [-58 to 194°F]		
Operating temperature	Ambient: -30 to 60°C [-22 to 140°F]		

LED Characteristic

Color	LED Characteristic	Description
Green constant		No error – Actuating
Green flashing @ 1.5 Hz		Neutral – Power save
Red constant		Internal error
Red flashing @ 1.5 Hz		External or Float error
Yellow		Disable mode

PVE Electro-hydraulic Actuation

PVES Reaction Times

Reaction times

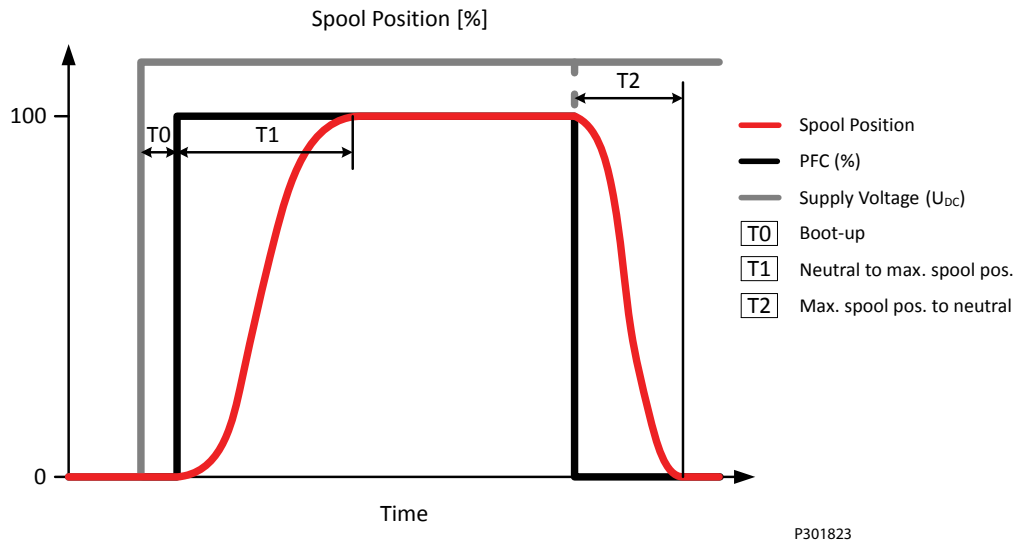

Reaction	PVES
T0 – Boot-up [ms]	15 ms
T1 – Neutral to max. spool stroke @ Power ON	125 ms
T2 – Max. spool stroke to neutral @ Power OFF	110 ms
T1 – Neutral to max. spool stroke @ Constant U_{DC}	110 ms
T2 – Max. spool stroke to neutral @ Constant U_{DC}	90 ms

The stated values are preliminary values and can be subject to change once an increased statistical basis is achieved.

PVE Hysteresis and Ripple

PVE hysteresis overview

PVE type	PVEP, PVES PVEH	PVEA	PVEM
Hysteresis (h)	<0.5 %	2 %	15 %
Steady state ripple @constant Us	0.2 mm	0.3 mm	0.0 mm

PVES Part Numbers

Part numbers for PVES variants

Part number	Type	Connector	IP	Fault Monitoring	Functionality
11166748	PVES	1x4 DEUTSCH	IP67	Passive	Standard
11166864	PVES	1x4 DEUTSCH	IP67	Active	
11166859	PVES	1x4 AMP	IP66	Passive	
11166858	PVES	1x4 AMP	IP66	Active	
11166849	PVES	1x4 DIN	IP65	Passive	
11166857	PVES	1x4 DIN	IP65	Active	

PVE Electro-hydraulic Actuation

Part numbers for PVES variants (continued)

Part number	Type	Connector	IP	Fault Monitoring	Functionality
11166745[1)]	PVES-U	1x4 DEUTSCH	IP67	Passive	Fixed U_S 0-10 V_{DC}
11166747[1)]	PVES-U	1x4 AMP	IP66	Active	
11166752[2)]	PVES-SP	1x6 DEUTSCH	IP67	Passive	Standard

[1)] Includes **Disable Mode** special feature

[2)] Includes **Spool Position** special feature

PVE Electro-hydraulic Actuation

Connector Overview

1 x 4 DEUTSCH	2 x 4 DEUTSCH	1 x 6 DEUTSCH
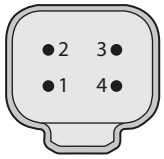	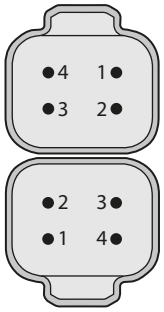	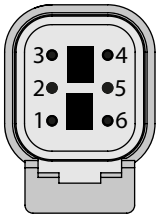

1 x 4 AMP	2 x 4 AMP	1 x 6 AMP	1 x 4 DIN
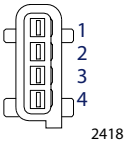	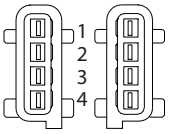	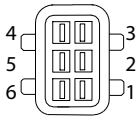	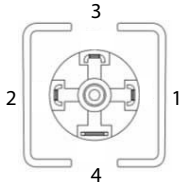

PVEO-DI 4-pin AMP Connector

Pinout	Pin 1	Pin 2	Pin 3	Pin 4
2x4 AMP (A)	U_{DC}_A	U_{DC}_B	GND	GND
2x4 AMP (B)	DI-B	DI-A	GND	U_{DC2}

PVEM 4-pin DIN Connector

Pinout	Pin 1	Pin 2	Pin 3	Pin 4
1x4 DIN	U_{DC}	U_S	Error	GND

PVEO, PVEO-R and PVEO-HP 4-pin Connector

Pinout	Pin 1	Pin 2	Pin 3	Pin 4
1x4 AMP	U_{DC}_A	U_{DC}_B	GND	GND
1x4 DEUTSCH	U_{DC}_A	GND	GND	U_{DC}_B
1x4 DIN	U_{DC}_A	U_{DC}_B	-	GND

PVEA/PVEH/PVES

Pinout	Pin 1	Pin 2	Pin 3	Pin 4
1x4 AMP	U_S	U_{DC}	GND	Error
1x4 DEUTSCH	U_S	Error	GND	U_{DC}
1x4 DIN	U_{DC}	U_S	Error	GND

PVEA-DI and PVEH-DI 4-pin Connector

Pinout	Pin 1	Pin 2	Pin 3	Pin 4
2x4 AMP (A)	U_S	U_{DC}	GND	Error
2x4 AMP (B)	DI-A	DI-B	GND	U_{DC2}

PVE Electro-hydraulic Actuation

PVEA-DI and PVEH-DI 4-pin Connector (continued)

Pinout	Pin 1	Pin 2	Pin 3	Pin 4
2x4 DEUTSCH (A)	U_S	Error	GND	U_{DC}
2x4 DEUTSCH (B)	U_{DC2}	GND	DI-A	DI-B

PVEH-FLA 6-pin Connector

Pinout	Pin 1	Pin 2	Pin 3	Pin 4	Pin 5	Pin 6
1x6 AMP	U_S	U_{DC}	GND	Error	Float	-
1x6 DEUTSCH	U_S	Error	-	SP	GND	U_{DC}

PVEH-SP and PVES-SP 6-pin Connector

Pinout	Pin 1	Pin 2	Pin 3	Pin 4	Pin 5	Pin 6
1x6 DEUTSCH	U_S	Error	-	SP	GND	U_{DC}

PVE Electro-hydraulic Actuation

Extension plates for PVE Series 7

The PVE Series 7 Extension Plates are intended for use in case of conflict with external piping when replacing a PVE Series 4 with a PVE Series 7.

The Extension Plates are compatible with all versions of the PVE Series 7 and come in two different sizes with different purposes:

- A) 17 mm [0.67] – Moves the PVE series 7 further away from the PVB module so the total length of the plate and the PVE Series 7 is similar to the length of a PVE Series 4
- B) 44 mm [1.73] – Moves the PVE series 7 further away from the PVB module so the distance between the PVE Series 7 connector and the PVB module is similar to the distance between connector and PVB module when using a PVE Series 4

If you are using a PVE Series 7 with 2x4 DEUTSCH connector the distance will be 12,9 mm smaller between the PVB module and the connector, than in the case of using a PVE Series 4.

PVE Series 7 extension plates

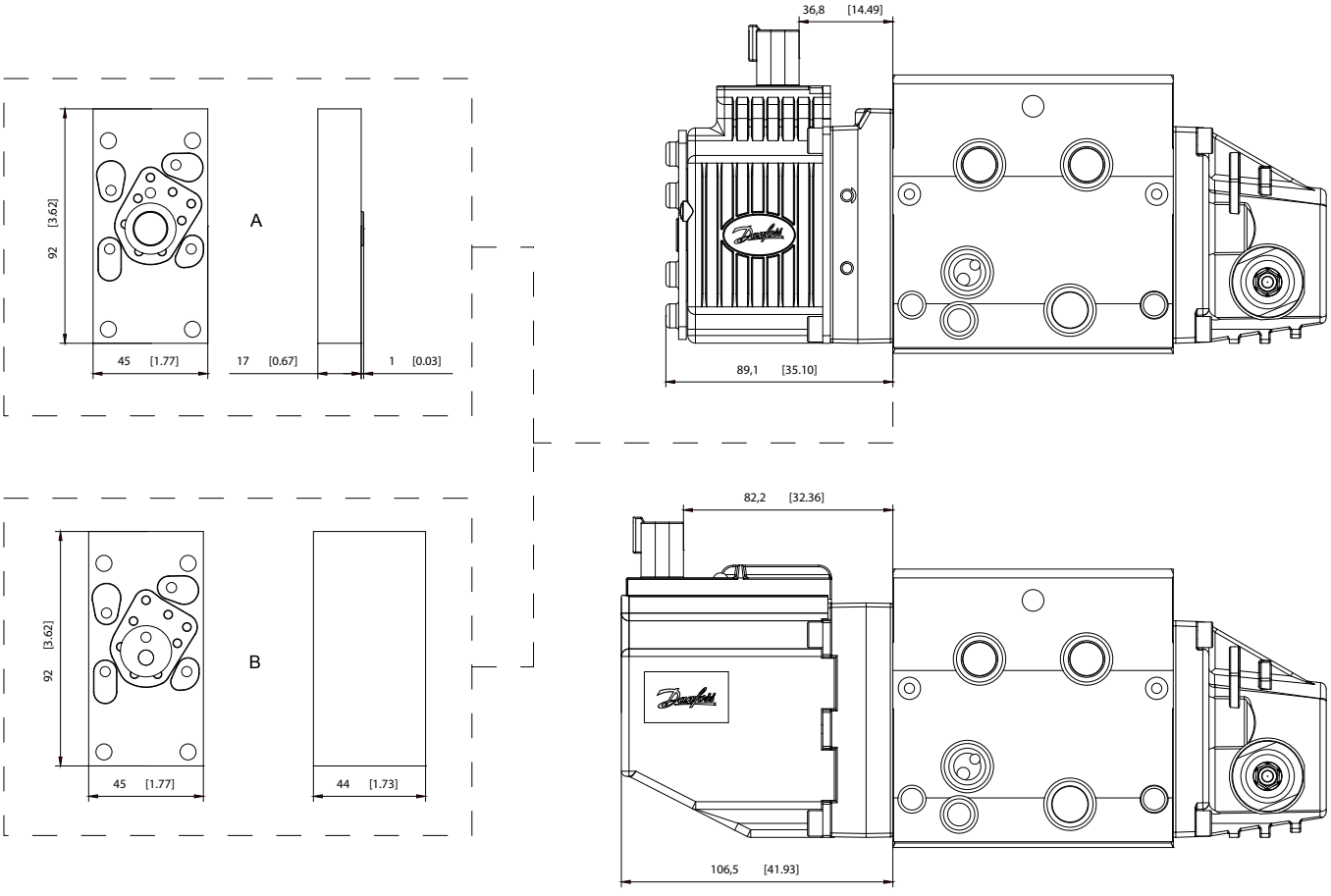

Part number	Description	Letter
11188891	17 mm aluminum block	A
11188902	44 mm aluminum block	B

Fault Monitoring and Reaction

All proportional control PVG 32 actuators feature:

- Integrated fault monitoring
- Detecting spool stroke inconsistencies
- Detecting internal hardware defects
- Detecting demand signal inconsistencies
- Fault reaction depending on the type of fault monitoring
  - Generic
  - Specific

Passive fault monitoring

Passive fault monitoring does not disable the solenoid valves when an error is detected. It will continue to operate despite that an error was detected. When the error no longer is registered the passive fault monitoring will "forget" the error and continue as if the error was never there.

With a passive fault monitoring the following conditions will happen when an error is detected/occurs:

- The LED light will switch from green to red and the error pin output will go high
- The solenoid valves will continue operating at the set point given at the time of the error
  - Only exception is if the error is caused by the supply voltage (U_{DC}) being either above or below the allowed range or if the temperature measured on the internal electronics board is higher than allowed. In these cases, the solenoid valves will be disabled.

Generic Fault Reaction

All PVE actuators with fault monitoring are triggered by the following main events:

Control Signal Monitoring	The Control signal voltage (U_S) is continuously monitored. The permissible range is between 15% and 85% of the supply voltage (U_{DC}). Outside this range the PVE will switch into an error state. A disconnected U_S pin (floating) is recognized as a neutral set point.
Transducer/LVDT Supervision	The internal LVDT wires are monitored. If the signals are interrupted or short-circuited, the PVE will switch into an error state.
Supervision of Spool Position	The actual position must always correspond to the demanded position (U_S). If the actual spool position is further out from neutral than the demanded spool position or in opposite direction, the PVE will switch into an error state. Spool position closer to neutral and in same direction will not cause an error state – the situation is considered *in control*.
Float Position Monitoring	Float position must be entered or left within a time limit. A too high delay on the 1x6 pin float PVE will cause an error state – this is relevant for the 1x6 pin PVEH-F actuators only.
Temperature Monitoring	When the temperature is too high the PVE LED will light constant red and solenoid valves will be disabled.

Fault Monitoring and Reaction

Fault Reaction Overview

All entries have an Auto Recovery feature unless marked otherwise.

Description	Monitoring	LED	Solenoid valves	Error pin output	Fault reaction time	
					PVEM/H/S	PVEA
Spool not at setpoint	Active*		Disabled	High	500	750
	Passive		-	High	250	750
Unable to reach float position	Active*		Disabled	High	1000	1000
	Passive		-	High	1000	1000
U dc > max.	Active		Disabled	-	-	-
	Passive		Disabled	-	-	-
U dc < min.	Active	————	Disabled	-	-	-
	Passive	————	Disabled	-	-	-
Us out of range	Active*		Disabled	High	500	750
	Passive		-	High	250	750
LVDT error	Active*		Disabled	High	500	750
	Passive		-	High	250	750
Temp > max.	Active*		Disabled	High	250	750
	Passive		Disabled	High	250	750

* Does not have Auto Recovery

Error Pin Specification

All proportional control PVE Series 7 actuators feature an error pin, indicating when an error is detected/ occurs, according to the Fault Reaction Overview table. The specifications of the error pin is shown below.

Description	No error	Error
Output state	Low	High
Output voltage	<2 Vdc	~Udc
Output current	Max. 100 mA	

Functionality Overview

Progressive oil flow characteristics depending on spool type

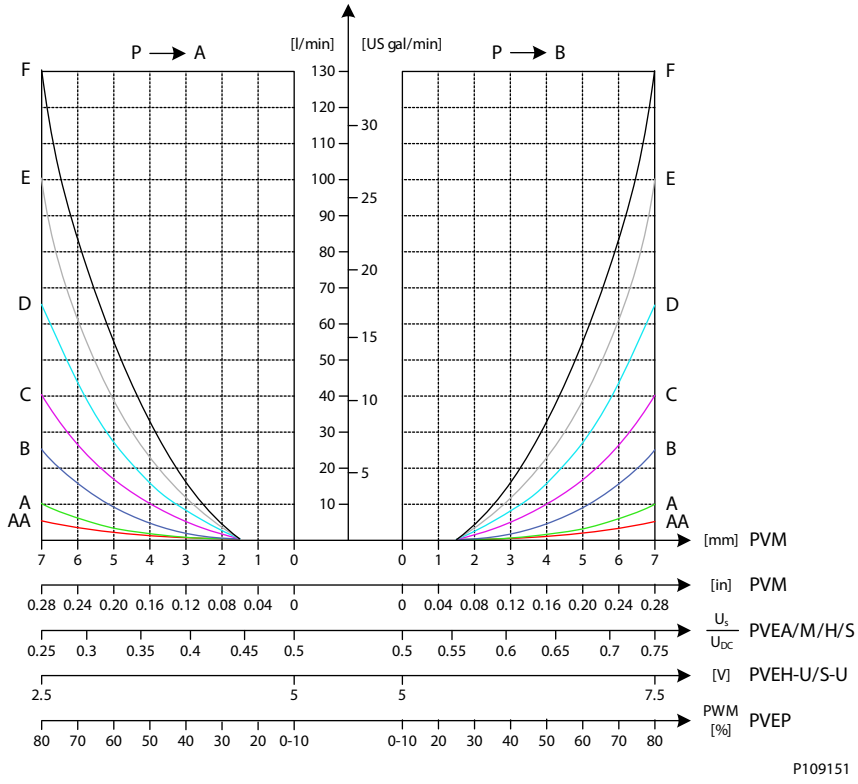

PWM Voltage Control

The PVEM/PVEA/PVEH/PVES actuator variants can be controlled by a PWM controlled signal voltage (Us) proportional to the supply voltage (Udc).

The V_1 and V_2 must be symmetrical around Udc/2 and V_1 must be equal to or less than Udc.

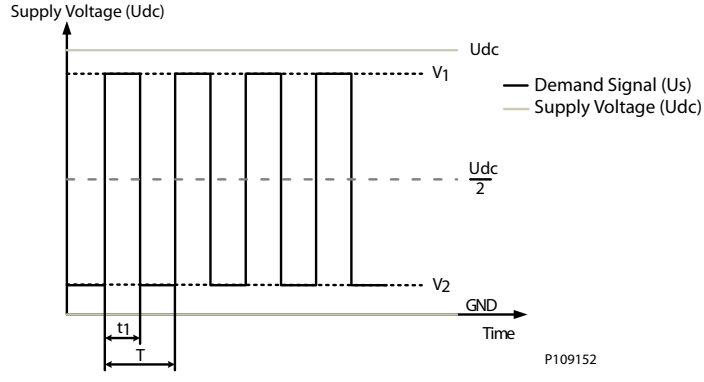

Functionality Overview

Float A-Port (-FLA)

The Float A-Port functionality enables the proportional PVEH-FLA actuator variants to enter the main spool into a float position. The PVE actuators with Float A-Port functionality is compatible with the dedicated main spools with electronic float in A-port.

PVE Type	PVBS Type	Standard Flow Control	Float Control
PVEH-FLA (1x6 pin)	Deadband 1.7 mm	Us = (0.25 → 0.75) · Udc	U dc to dedicated float pin (UF)
	Max. B-port flow 8.0 mm		

Float B-Port (-FLB)

The Float B-Port functionality enables the proportional PVEM-FLB/PVEH-FLB actuator variants to enter the main spool into a float position. The PVE actuators with Float B-Port functionality is compatible with the dedicated main spools with electronic float in B-port.

PVE Type	PVBS Type	Standard FC	Float Control
PVEM-FLB (1x4 pin)	Deadband 1.5 mm Max. B-port flow 4.8 mm	Us = (0.35 → 0.65) · U_{DC}	Us = 0.75 · U_{DC}
PVEH-FLB (1x4 pin)			

Float in B-port functionality

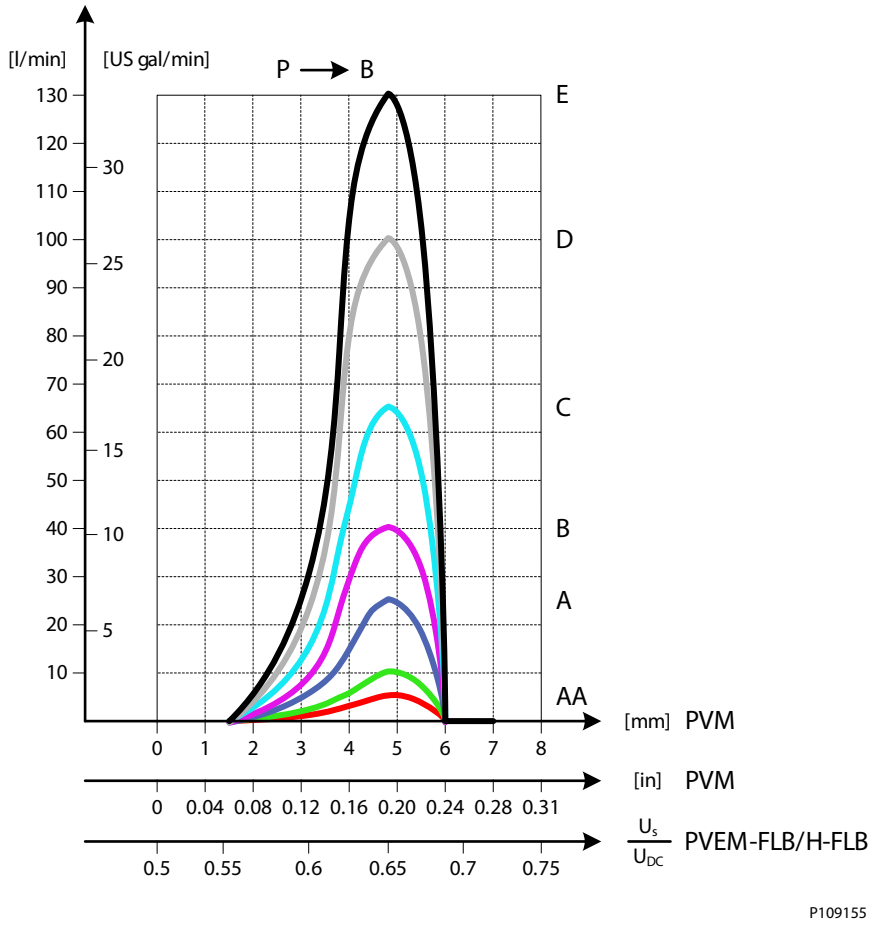

PVE Power Save

All proportional actuator variants feature a Power Save mode, de-energizing the solenoid valve bridge. The Power Save mode is entered when the signal voltage (Us) and the LVDT spool position has been in

Functionality Overview

neutral for 750 ms. As soon as the signal voltage (Us) or the LVDT spool position is out of neutral the PVE will leave its Power Save mode and re-energize the solenoid valve bridge as usual.

The Power Save mode results in increased power efficiency by reducing the current consumption of the PVE actuators in neutral position. The Power Save mode has no effect on the performance of the PVE actuator.

Special Features

Direction Indication (-DI)

The PVEO-DI/PVEA-DI/PVEH-DI actuator variants feature an integrated Direction Indication output derived from the LVDT spool position, indicating the state of the main spool (neutral, A-port or B-port).

PVEO-DI functionality

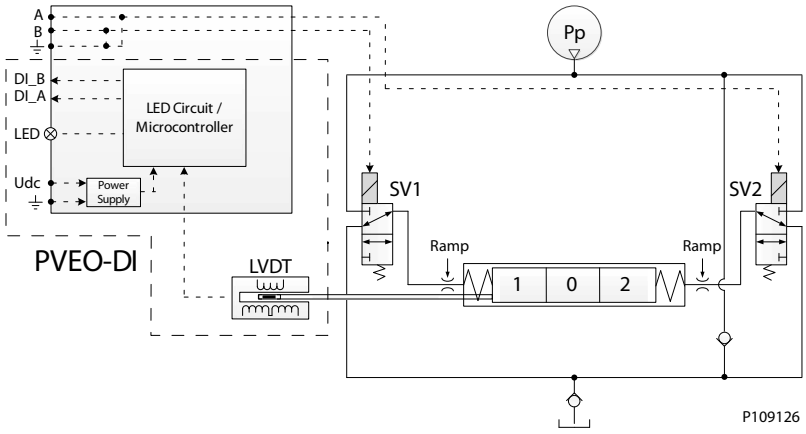

PVEA-DI functionality

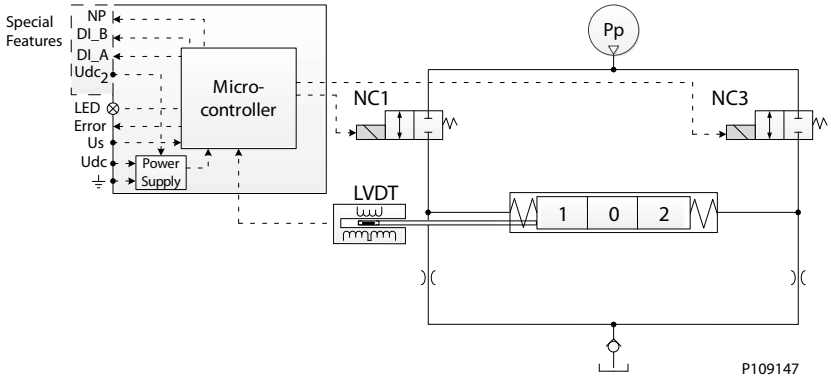

PVEH functionality

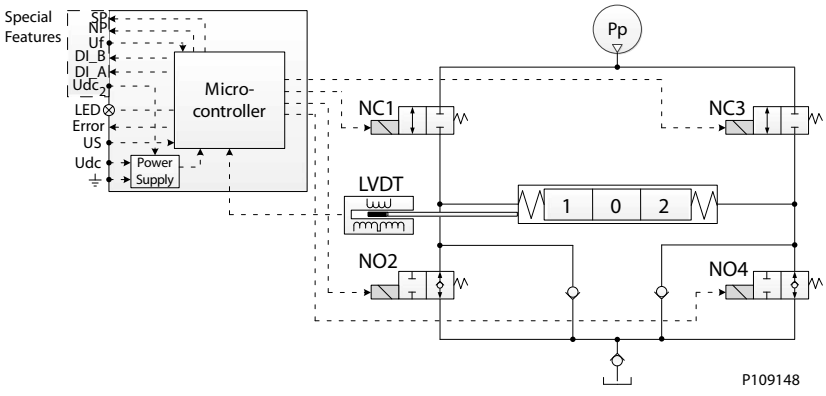

Special Features

The Direction Indication feature uses a dual power supply with the 2x4 pin AMP and DEUTSCH connectors as shown in the chapter *Connector Overview* on page 174.

When both DI_A and DI_B signals are High the main spool is in its neutral position.

When the DI_A signal goes Low and the DI_B signal stays High, the main spool is moving in the A-port direction, and vice versa. The relation between the direction indication feedback and the output signal is shown below.

Direction indication feedback

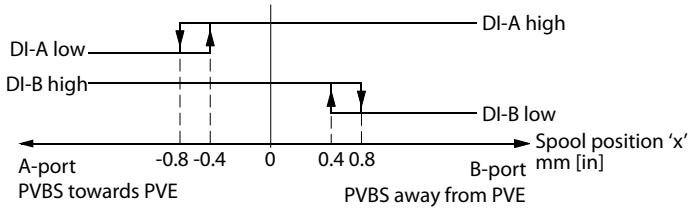

	A-Port	B-Port
DI signals a1, a2	–0.8 mm ± 0.4 mm	0.8 mm ± 0.4 mm
Max. DI load	200 mA	
DI High @ 20 mA	> U_{DC} – 1.5 V_{DC}	
DI High @ 100 mA	> U_{DC} – 2.0 V_{DC}	
DI Low	< 0.2 V_{DC}	

Dedicated Float Pin (UF)

The Dedicated Float Pin (UF) feature is related to the PVEH-FLA actuator variant enabling the user to move the main spool into its float position by power. The PVEH-FLA uses 1x6 pin AMP orDEUTSCH connectors.

- Normal operation: Low or not connected
- High Float
- Input range: U_{DC}
- Max. voltage: 32 V_{DC}

PVEH-FLA functionality diagram

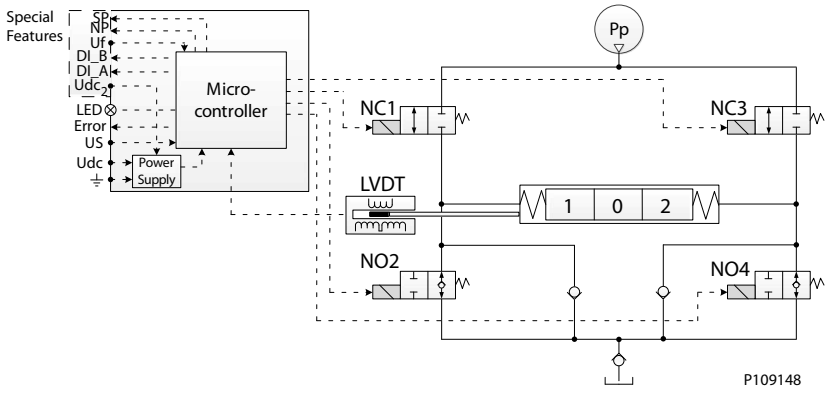

Special Features

Spool Position (SP)

The Spool Position (SP) feature available in the PVEH-SP/PVES-SP actuator variants enables the user to derive from the LVDT spool position of the main spool by means of an analog voltage signal on the dedicated spool position (SP) output pin.

PVEH-SP functionality diagram

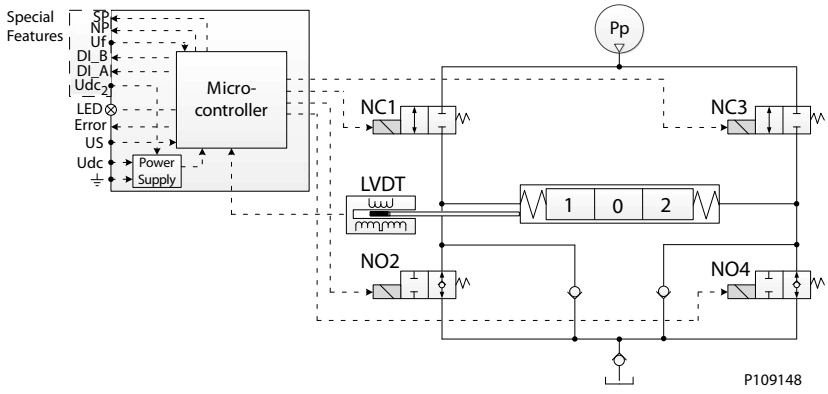

PVES-SP functionality diagram

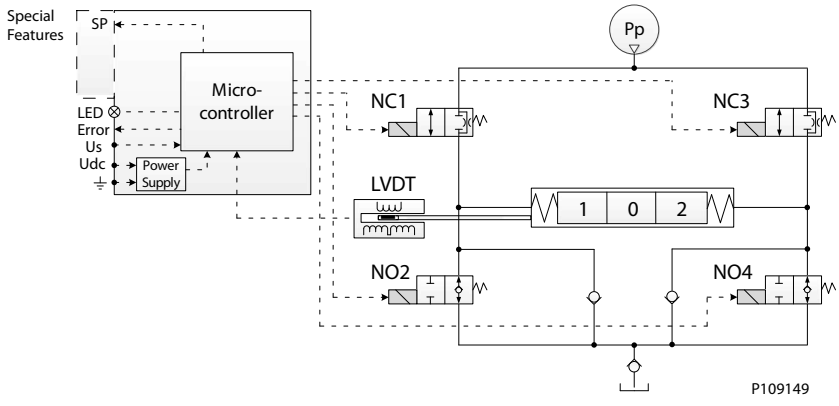

Spool Position feedback

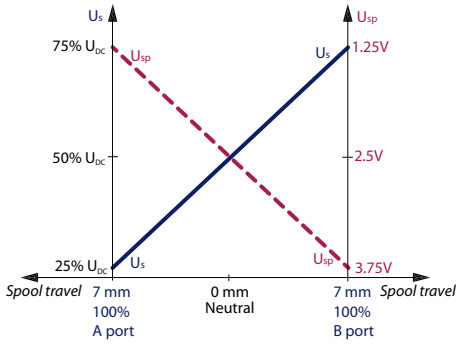

SP feedback signal from 0.5 to 4.0 V_{DC} inverted in direction relative to U_S 2.5 V_{DC} as the neutral value
SP from neutral to maximum stroke (mm)
SP maximum load is 0.5 mA
Output range for A-port: 2.5 – 1.25 V_{DC} and for B-port: 2.5 – 3.75 V_{DC}

The PVEH-SP/PVES-SP uses a 1x6 DEUTSCH connector. For more information, please see *Connector Overview* on page 174.

Special Features

Neutral Power-OFF (NP)

The Neutral Power-OFF (NP) feature available in the PVEA-NP and PVEH-NP actuator variants enables the user to identify whether the solenoid valves in the actuator are energized or de-energized via a dedicated neutral power-OFF (NP) output pin.

PVEA-NP functionality diagram

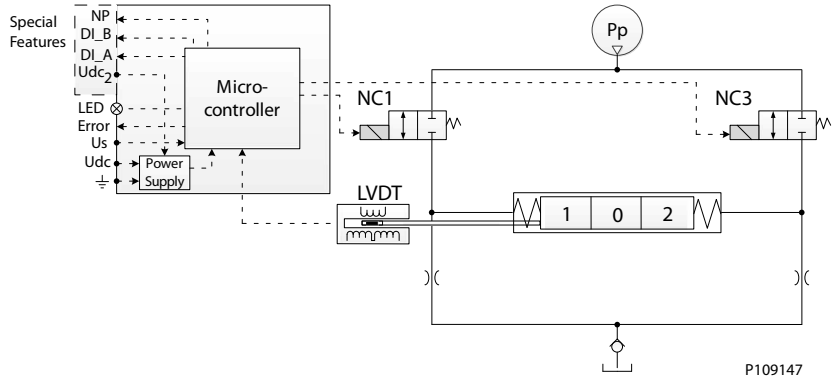

PVEH-NP functionality diagram

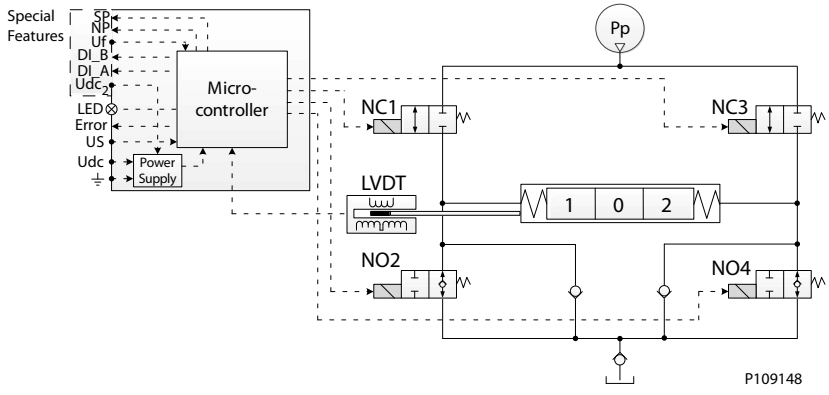

The Neutral Power-OFF (NP) signal is defined as shown below:

Solenoid disabling function (-NP) curves

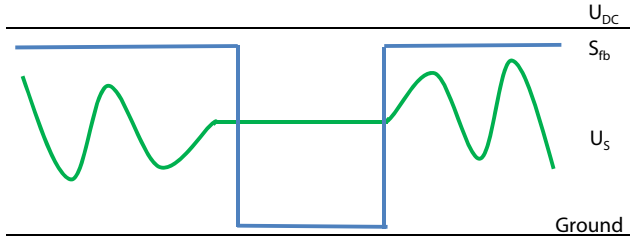

Normal operation from > U_{DC} to 2 V_{DC}

Power Save < 1 V_{DC} (solenoid valves de-energized)

NP maximum load is 50 mA

The PVEA-NP/PVEH-NP uses a 1x6 DEUTSCH connector. For more information, please see *Connector Overview* on page 174.

Special Features

Disable Mode

The PVEH-Uand PVES-U actuator variants controlled by a fixed 0-10 V_{DC} signal voltage (U_S), feature the ability to enter a disable mode. This causes the counteracting force on the main spool created by the solenoid valve bridge to deactivate, when using Manual OverRide (MOR).

The disable mode is entered by sending a signal voltage (Us) of 16.2% of 10 V_{DC} when in Power Save.

PVS End Plates

The PVG 32 PVS end plates close off the valve stack section placed between them by placing them at the end. Furthermore, the end plate is ensuring Load Sense (LS) is relieved to tank pressure when the valve is not operated.

The PVS end plate variants are based on a generic platform with a wide selection of additional features, enabling you to tailor the PVS to suit the demands of any hydraulic system.

The generic PVS end plates platform includes the following main variants:

- **PVS/PVSI** – Either aluminum or cast iron
- **PVS/PVSI with LX-connection** – Either aluminum or cast iron
- **PVSI with P-, T-, LX- and M-connection** – Cast iron
- **PVSI start plate** – Cast iron
- **PVSD** – Cast iron
- **PVSI with PVE PPRV** – Cast iron
- **PVST with T-connection** – Steel
- **PVST with PVE PPRV and PP dump** – Steel

PVS/PVSI

PVS/PVSI with LX-connection

PVSI with P-, T-, LX- and M-connection

PVST with T-connection

PVS End Plates

PVSI start plate

PVSI with PVE PPRV

PVSD end plate

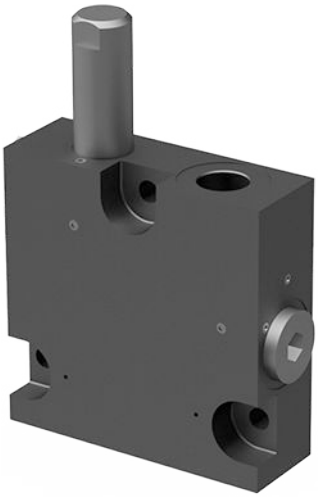

PVST with PVE PPRV and PP dump

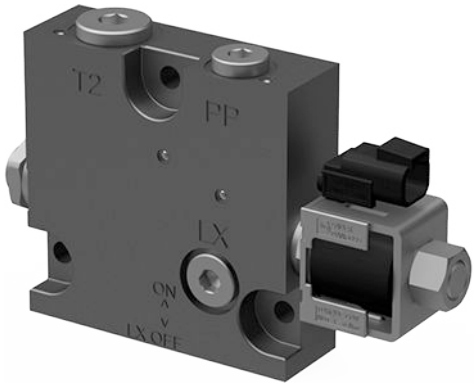

Technical specification

Parameter	Minimum	Recommended range	Maximum
Fluid temperature	-30°C [-22°F]	30 to 60°C [86 to 140°F]	90° [194°F]
Fluid viscosity	4 mm^2/s [39 SUS]	12 to 75 mm^2/s [65 to 347 SUS]	460 mm^2/s [2128 SUS]
Fluid cleanliness	23/19/16 (according to ISO 4406)		
Operating temperature	Ambient: -30 to 60°C [-22 to 140°F]		

For more information about PVS End Plates, see:

PVS/PVSI on page 189
PVS/PVSI with LX-connection on page 191
PVSI with P-, T-, LX- and M-connection on page 193
PVST with T-connection on page 194
PVSI Start Plate on page 195
PVSD End Plate on page 196
PVSI with PVE PPRV on page 198
PVST with PVE PPRV and PP dump on page 200

PVS End Plates

PVS/PVSI

The PVS/PVSI are made of either aluminum or cast iron material and works as an end plate.

The PVSI Start Plates features:

- Integrated LS pressure relief valve to tank
- Optional integrated thermal orifice
- Optional version without seals

PVS/PVSI

PVS/PVSI dimensions

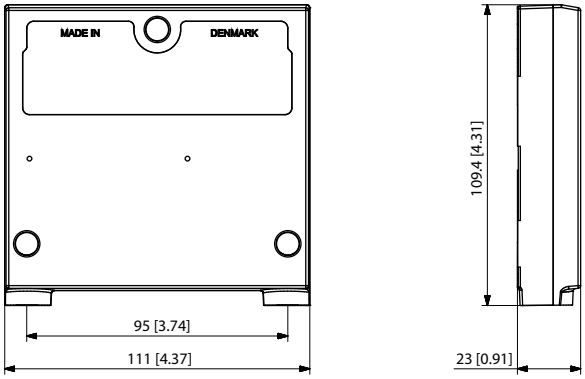

Weight: 0.47 kg [1.05 lb]

PVS/PVSI schematic

Maximum pressure for P- and T-port

Max. P-port continuous	Max. P-port intermittent	Max. T-port static/dynamic
300/350 bar [4351/5076 psi]	400 bar [5800 psi]	25/40 bar [365/580 psi]

See part number table for details on maximum pressure capacity

Technical specification

Parameter	Minimum	Recommended range	Maximum
Fluid temperature	-30°C [-22°F]	30 to 60°C [86 to 140°F]	90° [194°F]
Fluid viscosity	4 mm^2/s [39 SUS]	12 to 75 mm^2/s [65 to 347 SUS]	460 mm^2/s [2128 SUS]
Fluid cleanliness	23/19/16 (according to ISO 4406)		
Operating temperature	Ambient: -30 to 60°C [-22 to 140°F]		

Part numbers for PVS end plates

Part number	Maximum pressure	Material	Weight kg [lb]	Seals	Mounting
157B2000	300 bar [4351 psi]	Aluminum	0.475 [1.05]	Yes	M8
157B2020	300 bar [4351 psi]	Aluminum	0.475 [1.05]	Yes	5/16-18 UNC
157B2004	350 bar [5076 psi]	Cast iron	1.745 [3.85]	Yes	5/16-18 UNC
157B2014	350 bar [5076 psi]	Cast iron	1.745 [3.85]	Yes	M8
157B2017	350 bar [5076 psi]	Cast iron	1.745 [3.85]	Yes	M10

PVS End Plates

Part numbers for PVS end plates (continued)

Part number	Maximum pressure	Material	Weight kg [lb]	Seals	Mounting
157B2018	350 bar [5076 psi]	Cast iron	1.745 [3.85]	No[1]	M8
157B2902[2]	350 bar [5076 psi]	Cast iron	1.745 [3.85]	Yes	M8

[1] For use with priority modules.

[2] Thermal orifice 0.8 mm.

PVS End Plates

PVS/PVSI with LX-connection

The PVG 32 PVS end plates are placed at the end the valve stack section. Furthermore, the end plate is ensuring Load Sense (LS) is relieved to tank pressure when the valve is not operated. The LX port enables other remote valves to be connected onto the Load Sense shuttle network.

The PVS type end plates are made of aluminum while the PVSI types are made of cast iron thereby being able to withstand a higher pressure.

The PVS/PVSI with LX-port connection features:

- Integrated LS pressure relief valve to tank
- Threaded LX port for connecting another valve to LS network

PVS/PVSI with LX-connection

PVS/PVSI with LX-connection dimensions

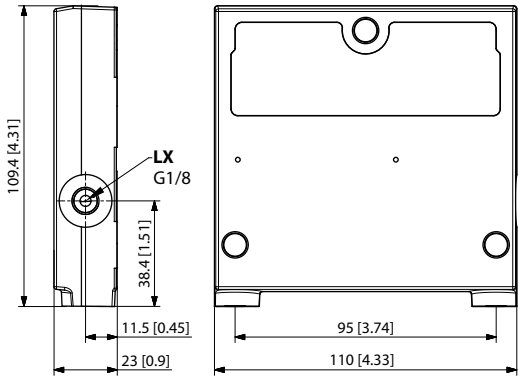

PVS/PVSI with LX-connection schematic

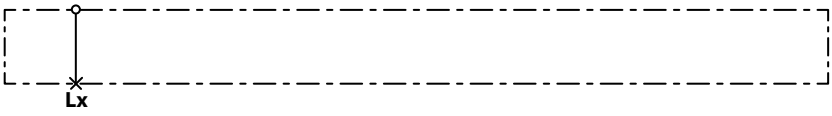

Maximum pressure for P- and T-port

Max. P-port continuous	Max. P-port intermittent	Max. T-port static/dynamic
300/350 bar [4351/5076 psi]	400 bar [5800 psi]	25/40 bar [365/580 psi]

See part number table for details on maximum pressure capacity

Technical specification

Parameter	Minimum	Recommended range	Maximum
Fluid temperature	-30°C [-22°F]	30 to 60°C [86 to 140°F]	90° [194°F]
Fluid viscosity	4 mm^2/s [39 SUS]	12 to 75 mm^2/s [65 to 347 SUS]	460 mm^2/s [2128 SUS]
Fluid cleanliness	23/19/16 (according to ISO 4406)		
Operating temperature	Ambient: -30 to 60°C [-22 to 140°F]		

Part numbers for PVS/PVSI with LX-port connection

Part number	Max. pressure	Material	Weight kg [lb]	LX port	Mounting
157B2005	350 bar 5076 psi]	Cast iron	1.695 [3.74]	1/2-20 UNF	5/16-18 UNC
157B2015				G1/4"	M8
157B2910				M12x1.5 ISO 6149	

PVS End Plates

Part numbers for PVS/PVSI with LX-port connection (continued)

Part number	Max. pressure	Material	Weight kg [lb]	LX port	Mounting
157B2011	300 bar [4351 psi]	Aluminum	0.495 [1.09]	G1/8"	M8
157B2021				3/8-24 UNF	5/16-18 UNC

PVS End Plates

PVSI with P-, T-, LX- and M-connection

PVSI is made of cast iron and works as an end plate. The PVSI with LX connection enables another valves LS pressure to be shuttled to the pump when needed. The additional P- and T-port connections enables an additional pump flow to a PVG 32 valve.

The PVSI with P-, T-, LX- and M-connection features:

- Integrated LS pressure relief valve to tank
- Threaded ports for P/T/LS/LX and M measuring gauge

PVSI with P-, T-, LX- and M-connection

PVSI with P-, T-, LX- and M-connection dimensions

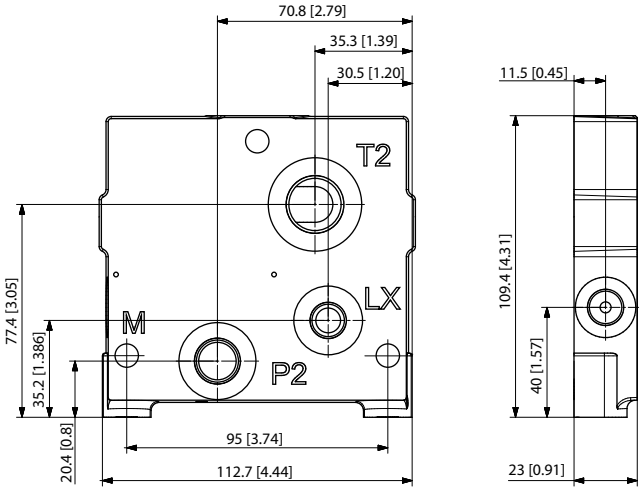

PVSI with P-, T-, LX- and M-connection schematic

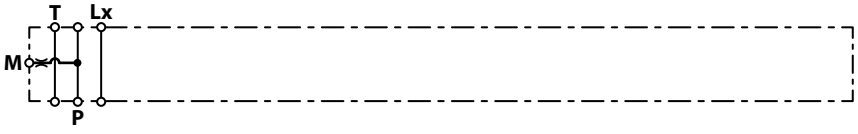

Maximum pressure for P- and T-port

Max. P-port continuous	Max. P-port intermittent	Max. T-port static/dynamic
300/350 bar [4351/5076 psi]	400 bar [5800 psi]	25/40 bar [365/580 psi]

See part number table for details on maximum pressure capacity

Technical specification

Parameter	Minimum	Recommended range	Maximum
Fluid temperature	-30°C [-22°F]	30 to 60°C [86 to 140°F]	90° [194°F]
Fluid viscosity	4 mm^2/s [39 SUS]	12 to 75 mm^2/s [65 to 347 SUS]	460 mm^2/s [2128 SUS]
Fluid cleanliness	23/19/16 (according to ISO 4406)		
Operating temperature	Ambient: -30 to 60°C [-22 to 140°F]		

Part number for PVSI with P-, T-, LX-, M-ports

Part number	P-port	T-port	LX-port	M-port	Mounting feet	Weight
157B2921	G1/2	G1/2	G1/4	G1/4	M8	2.5 kg [5.51 lb]

PVS End Plates

PVST with T-connection

The PVST end plate closes off the valve stack section placed between them by placing it at the end. Furthermore, the end plate is ensuring Load Sense (LS) is relieved to tank pressure when the valve is not operated.

The PVSI Start Plates features:

- Integrated LS pressure relief valve to tank
- Threaded T port
- Optional integrated thermal orifice

PVST with T-connection

PVST with T-connection dimensions

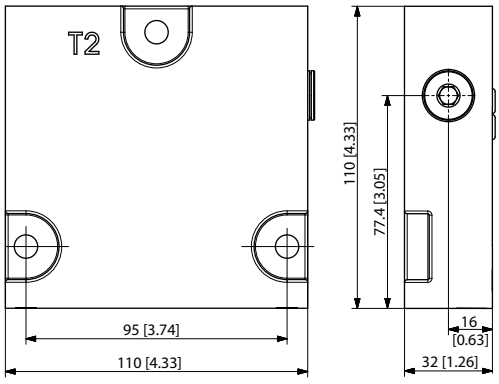

PVST with T-connection schematic

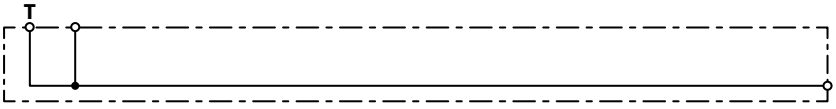

Maximum pressure for P- and T-port

Max. P-port continuous	Max. P-port intermittent	Max. T-port static/dynamic
300/350 bar [4351/5076 psi]	400 bar [5800 psi]	25/40 bar [365/580 psi]

See part number table for details on maximum pressure capacity

Technical specification

Parameter	Minimum	Recommended range	Maximum
Fluid temperature	-30°C [-22°F]	30 to 60°C [86 to 140°F]	90° [194°F]
Fluid viscosity	4 mm^2/s [39 SUS]	12 to 75 mm^2/s [65 to 347 SUS]	460 mm^2/s [2128 SUS]
Fluid cleanliness	23/19/16 (according to ISO 4406)		
Operating temperature	Ambient: -30 to 60°C [-22 to 140°F]		

When using a PVST with T-connection it is not possible to use the LS A/B fitting in the bottom of the PVG section next to the PVST.

Part numbers for PVST with T-connection

Part number	Material	T-port	Mounting feet	Weight
157B2500	Steel	G1/2	M8	0.47 kg [1.05 lb]
157B2520		7/8–14	5/16–18	

PVS End Plates

Part numbers for PVST with T-connection (continued)

Part number	Material	T-port	Mounting feet	Weight
157B2913	Iron	M22x1.5 DIN 3852-1	M8	0.6 kg [1.32 lb]
11004462		M22x1.5 ISO 6149		

PVSI Start Plate

The PVG 32 PVSI iron start plates is for use with PVPM in a closed center configuration for use with variable displacement pumps.

The PVSI Start Plates features:

- Integrated pilot pressure reducing valve (PPRV) for PVE
- Integrated sealing for groups with/without T0 port
- Threaded ports for LS and T0 port

PVSI start plate

Dimensions

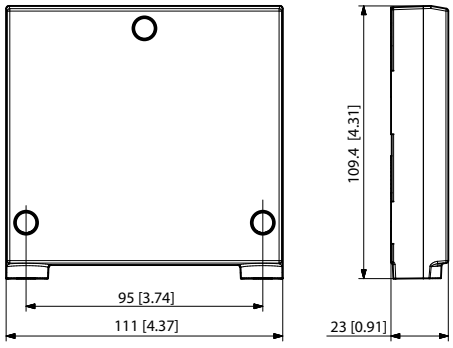

Schematic

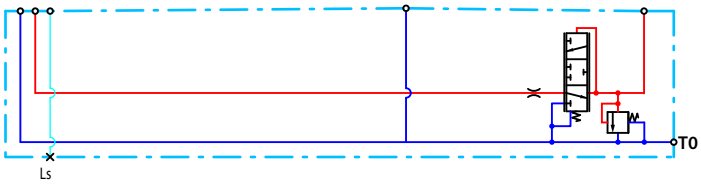

Maximum pressure for P- and T-port

Max. P-port continuous	Max. P-port intermittent	Max. T-port static/dynamic
300/350 bar [4351/5076 psi]	400 bar [5800 psi]	25/40 bar [365/580 psi]

See part number table for details on maximum pressure capacity

Part numbers for PVSI start plates

Part number	LS-, T0-port	Mounting	Weight
11091772	9/16–18-UNF	5/16-18 UNC	1.6 kg [3.53 lb]
11091773	G1/4"	M8	

PVS End Plates

PVSD End Plate

The PVSD cast iron end plates are used for preventing T-line peaks and spillage and closing off the valve stack section at the end.

Furthermore, the end plate is ensuring Load Sense (LS) is relieved to tank pressure while the valve is not operated and features threaded P and V (spillage) ports.

PVSD end plate

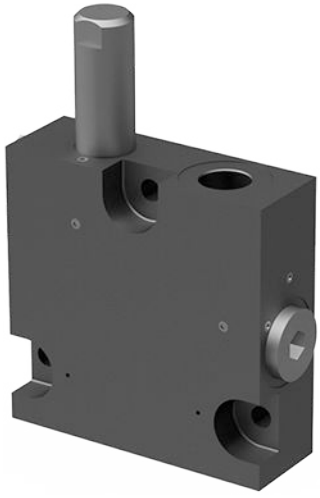

Schematic

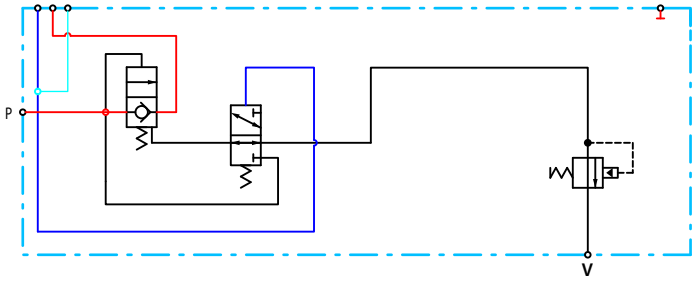

Dimensions

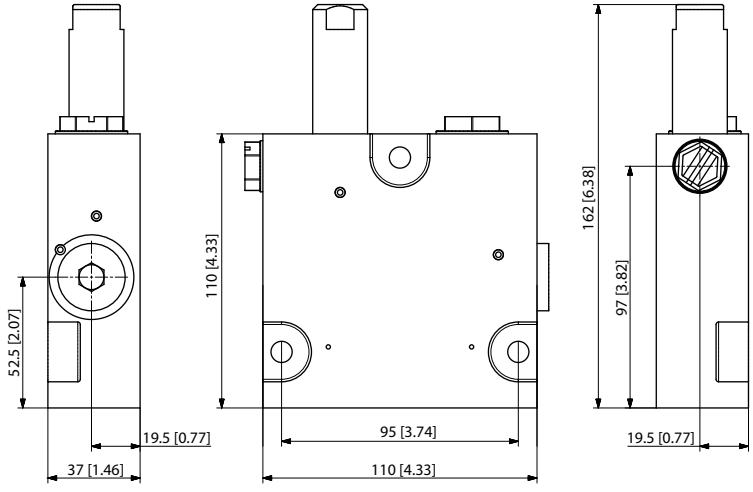

PVS End Plates

Pressure drop P to P characteristic

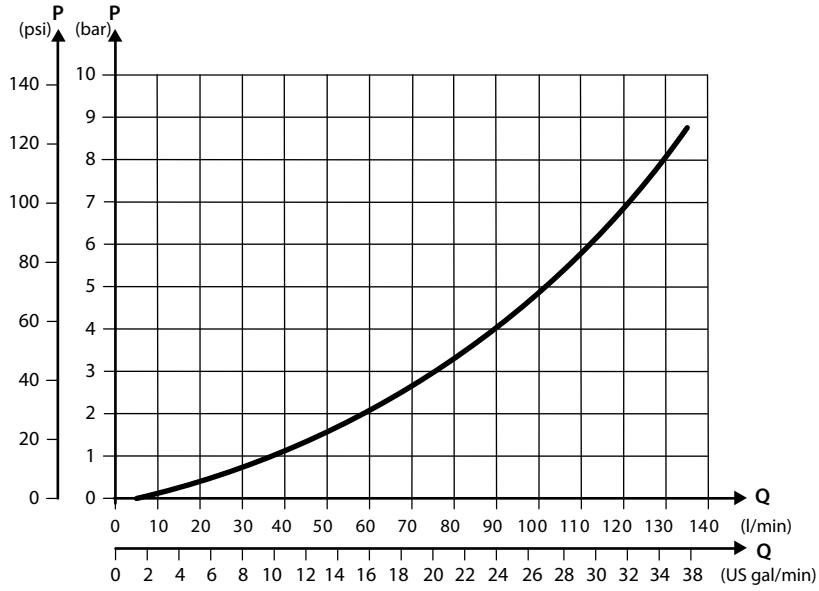

Maximum pressure, flow and leakage

Max. P-port continuous	Max. T-port static/ dynamic	Max. rated pump flow	V- port leakage
210 bar [3046 psi]	50 bar [725 psi]	120 l/min [31.7 US gal/min]	1 cm^3 [0.06 in^3] / hour

See part number table for details on maximum pressure capacity

Part number for PVSD end plate

Part number	P-, V-port	Weight	Mounting
157B2904	G1/4"	3.01 kg [6.64 lb]	M8

PVS End Plates

PVSI with PVE PPRV

The PVG 32 PVS end plates close off the valve stack section placed between them by placing them at the end. Furthermore, the end plate is ensuring Load Sense (LS) is relieved to tank pressure when the valve is not operated.

The integrated pilot pressure reduction valve (PPRV) is intended a valve group with electro-hydraulic controlled work sections.

The PVSI with PVE PPRV features:

- Integrated pilot pressure reducing valve (PPRV) for PVE
- Threaded T0 port

PVSI with PVE PPRV

Dimensions

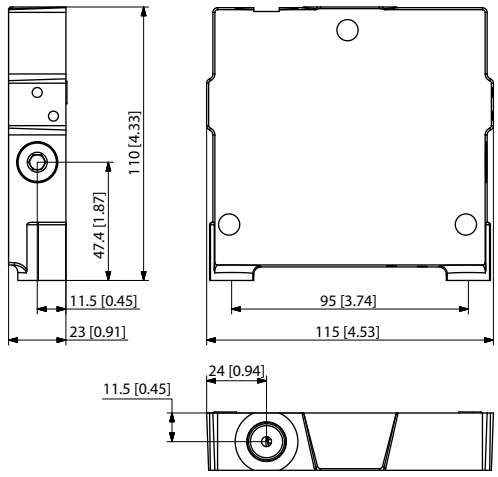

Schematic

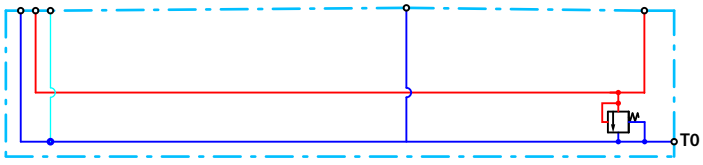

Pilot pressure reduction valve characteristics

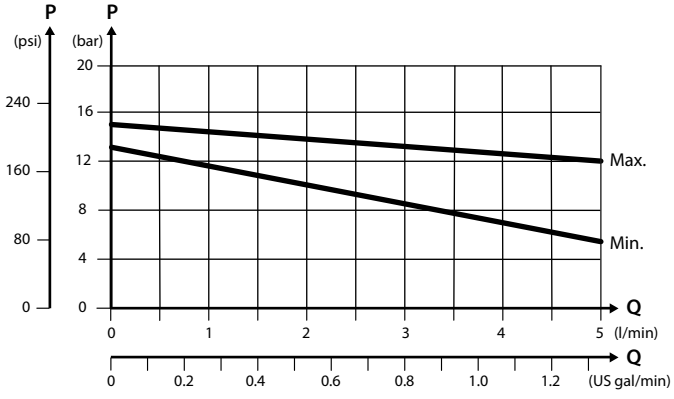

PVS End Plates

Maximum pressure for P- and T-port

Max. P-port continuous	Max. P-port intermittent	Max. T-port static/dynamic
300/350 bar [4351/5076 psi]	400 bar [5800 psi]	25/40 bar [365/580 psi]

See part number table for details on maximum pressure capacity

Part number for PVSI with PVE PPRV plate

Part number	T0-port	Weight	Mounting
157B2917	M14x1.5	0.48 kg [1.05 lb]	M10

PVS End Plates

PVST with PVE PPRV and PP dump

The PVG 32 PVS end plates close off the valve stack section placed between them by placing them at the end. Furthermore, the end plate is ensuring Load Sense (LS) is relieved to tank pressure when the valve is not operated.

The integrated pilot pressure reduction valve (PPRV) is intended a valve group with electro-hydraulic controlled work sections. The pilot pressure can be dumped to tank thereby preventing any electrical activation of the work sections.

The selectable LX port enables other remote valves to be connected onto the Load Sense shuttle network.

The PVST with PVE PPRV and PP dump features:

- Integrated pilot pressure reducing valve (PPRV) for PVE
- Integrated pilot oil dump valve
- Threaded T and LX port
- Selector for LX or not LX modes

PVST with PVE PPRV and PP dump

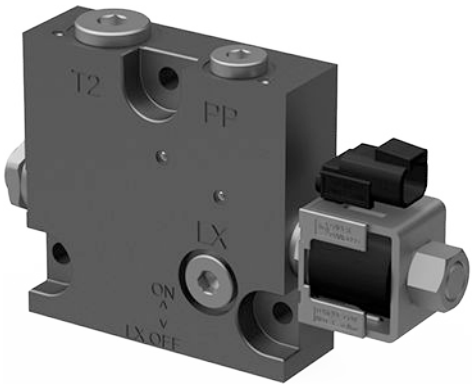

Schematic

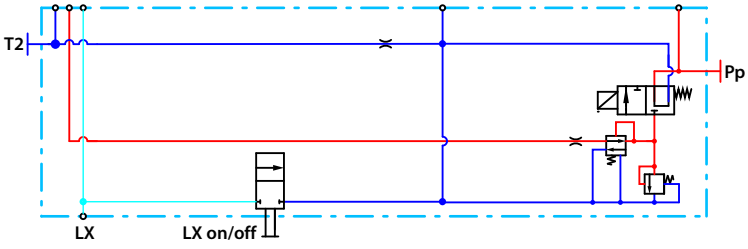

PVS End Plates

Dimensions

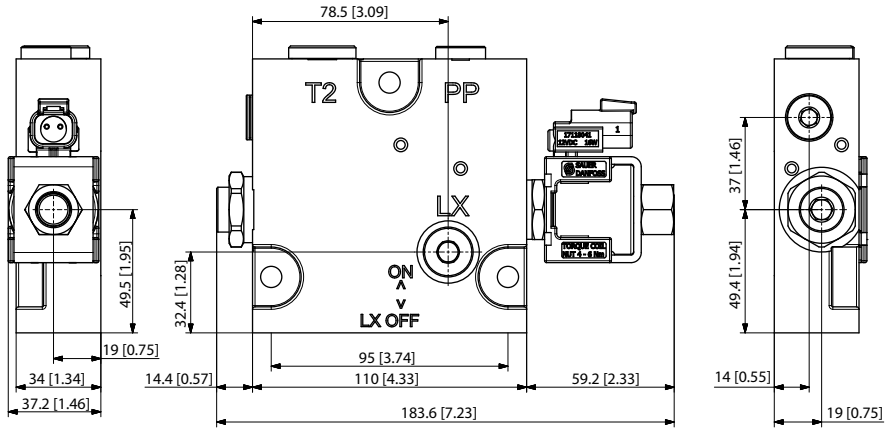

Pilot pressure reduction valve characteristics

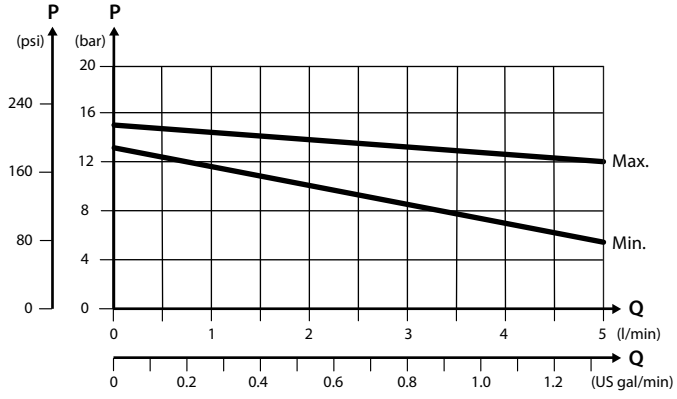

Maximum pressure for P- and T-port

Max. P-port continuous	Max. P-port intermittent	Max. T-port static/dynamic
300/350 bar [4351/5076 psi]	400 bar [5800 psi]	25/40 bar [365/580 psi]

See part number table for details on maximum pressure capacity

Part number for PVST with PPRV/PP dump

Part number	T0, LX-port	T- port	PP dump	Weight	Mounting
11050065	M14x1.5	M22x1.5	12 V_{DC}	3.2 kg [7.05 lb]	M8

PVSKM Full Flow Cut Off Modules

The PVG 32 PVSKM inline full flow cut-off module, also referred to as full flow cut-off modules, enables an integrated full flow cut-off and High Pressure Carry Over (HPCO) functionality by means of the integrated PVSKM spool, controlled either manually, hydraulically or electrohydraulically.

The PVG 32 PVSKM modules, also referred to as full flow cut-off modules, inline full flow cut-off of flow or as an HPCO, High Pressure Carry Over port.

The PVSKM module allows a position anywhere in the PVG 32 valve group, similar to a standard PVG 32 basic module. The freedom of position of the PVSKM module in the PVG 32 valve group enables a full flow cut-off, of the entire valve group, by placing the PVSKM right after the PVP inlet module, or only a part of the valve group, by placing the PVSKM elsewhere in the valve group.

The PVSKM module variants are based on a generic platform with a wide selection of additional features, enabling you to tailor the valve stack to comply with Category 2 or 3 safety systems according to ISO 13849.

The PVSKM Full Flow Cut-Off Module features:

- Threaded port for HPCO port
- Optional T0 facility and external T0 port
- Different PVSKM spool types depending on requested HPCO flow capacity

PVSKM Full Flow Cut Off module

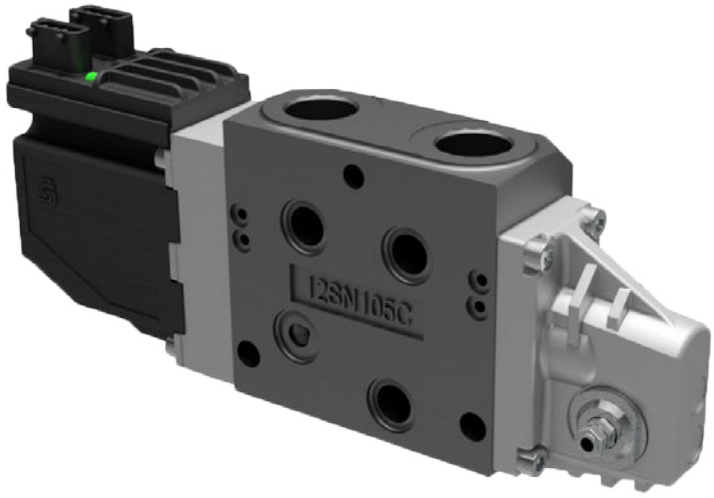

PVSKM schematic

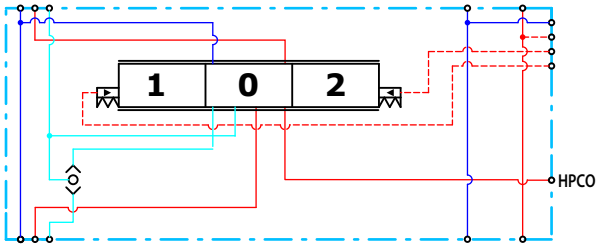

PVSKM Full Flow Cut Off Modules

PVSKM Functionality

Neutral mode

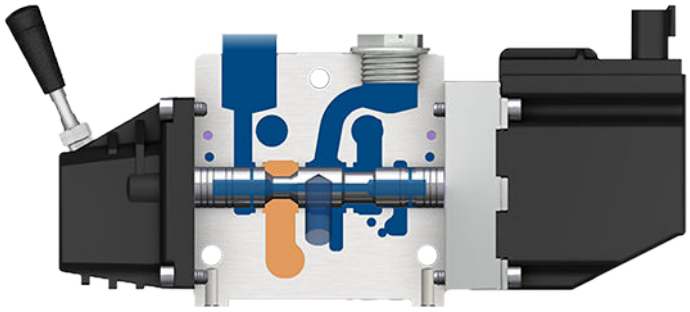

PVG mode

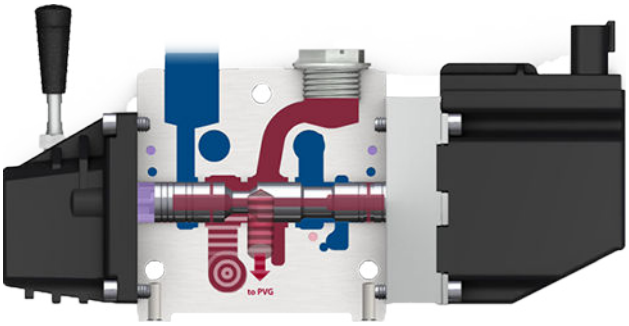

HPCO mode

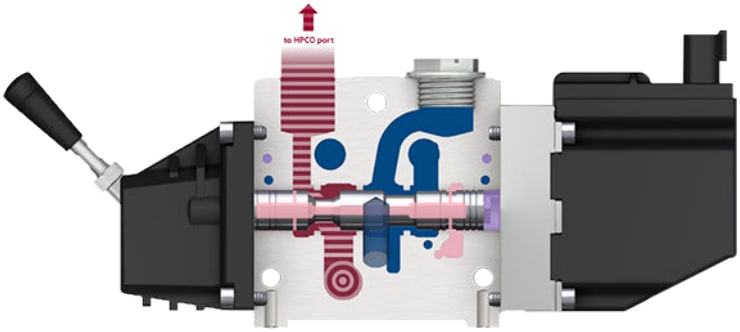

Maximum pressure for P- and T-port

Max. P-port continuous	Max. P-port intermittent	Max. T-port static/dynamic
300/350 bar [4351/5076 psi]	400 bar [5800 psi]	25/40 bar [365/580 psi]

Technical specification

Parameter	Minimum	Recommended range	Maximum
Fluid temperature	-30°C [-22°F]	30 to 60°C [86 to 140°F]	90° [194°F]
Fluid viscosity	4 mm^2/s [39 SUS]	12 to 75 mm^2/s [65 to 347 SUS]	460 mm^2/s [2128 SUS]
Fluid cleanliness	23/19/16 (according to ISO 4406)		
Operating temperature	Ambient: -30 to 60°C [-22 to 140°F]		

PVSKM Full Flow Cut Off Modules

Part number for PVSKM module

Part number	P-port/HPCO-port	T0 Facility	Mounting
11099469	G3/4"	yes	M8
11107369	1 1/16-12 UN	yes	
11117252	G3/4"	-	

PVSKM Full Flow Cut Off Modules

PVSKM Spool

PVSKM Spool schematic

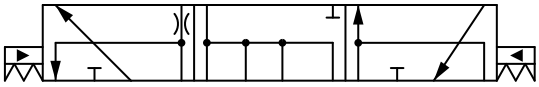

Theoretical Performance

Pressure drop P to P characteristic

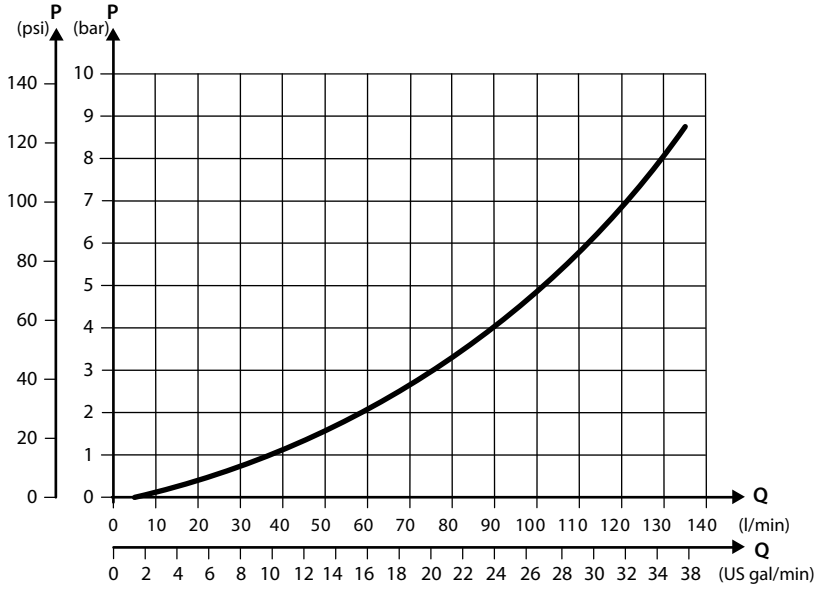

Pressure drop from P to HPCO characteristics

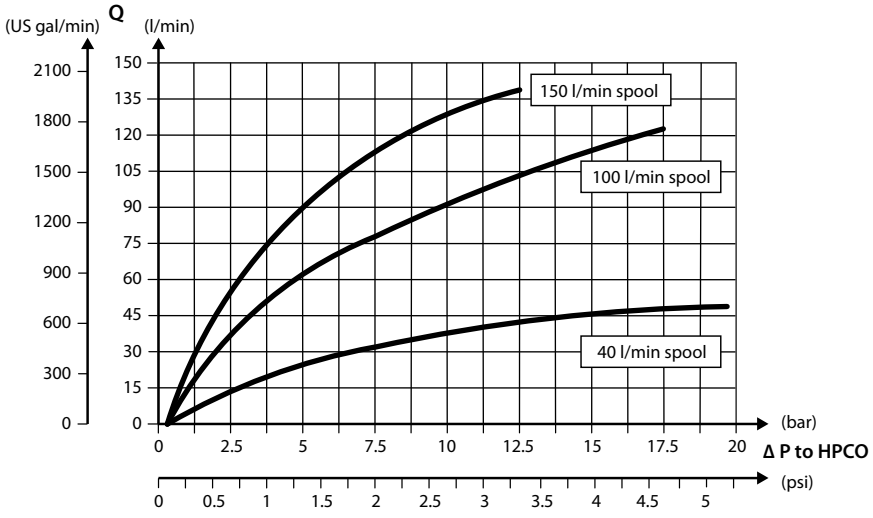

PVSKM Full Flow Cut Off Modules

Part number for PVSKM spool

Part number	HPCO flow	Actuation method
11100036	150 l/min [39.6 US gal/min]	PVE
11116733	40 l/min [10.6 US gal/min]	
11116734	100 l/min [26.4 US gal/min]	
11111293	150 l/min [39.6 US gal/min]	PVH/PVHC

PVAS Stay Bolts

PVAS Stay Bolts kit for various PVG combinations consist of three tie rods, six washers, six nuts and O-ring. Use the guide and reference tables how to choose PVAS kit.

The tie rods are inserted through the entire length of the PVG valve stack. The nuts are tightened at the pump side and at the end plate.

To find the PVAS kit that fits your PVG 16 valve stack, you need to go to the table *PVG 32 modules total length* on page 208 and find the length. Then go to the table *PVAS Part Numbers* on page 207 and find the matching part number.

For stay bolts for a PVG 32/16 combination, see this *PVG 32/16 Combinations* on page 208.

Stay bolts for PVG 256/128/32/16 combinations consist of two different kits. See *PVG 256/128/32/16 Combinations* on page 209 to find the right kits for your combination.

Combinations with PVG 100 and PVG 120 requires special PVAS kits. These are not included in the PVAS table.

PVAS Part Numbers

PVAS part numbers according to accumulated length interval PVG 32.

PVAS part numbers

Length, mm [in]	Part number	Length, mm [in]	Part number
20 – 48 [0.79 – 1.89]	**11188219**	361 – 372 [14.21 – 14.65]	**11188205**
49 – 60 [1.93 – 2.36]	**11188218**	373 – 384 [14.69 – 15.12]	**157B8026**
61 – 72 [2.40 – 2.83]	**157B8000**	385 – 396 [15.16 – 15.59]	**11188204**
73 – 84 [2.87 – 3.31]	**11188217**	397 – 408 [15.63 – 16.06]	**157B8007**
85 – 96 [3.35 – 3.78]	**157B8031**	409 – 420 [16.10 – 16.54]	**11188203**
97 – 108 [3.82 – 4.25]	**11188216**	421 – 432 [16.58 – 17.01]	**157B8027**
109 – 120 [4.29 – 4.72]	**157B8001**	433 – 444 [17.05 – 17.48]	**11188202**
121 – 132 [4.76 – 5.20]	**11188215**	445 – 456 [17.52 – 17.95]	**157B8008**
133 – 144 [5.24 – 5.67]	**157B8021**	457 – 468 [17.99 – 18.43]	**11188201**
145 – 156 [5.71 – 6.14]	**11188214**	469 – 480 [18.47 – 18.90]	**157B8028**
157 – 168 [6.18 – 6.61]	**157B8002**	481 - 492 [18.94 – 19.37]	**11188200**
169 – 180 [6.65 – 7.09]	**11188213**	493 – 504 [19.41 – 19.84]	**157B8009**
181 – 192 [7.13 – 7.56]	**157B8022**	505 – 516 [19.88 – 20.31]	**11188199**
193 – 204 [7.60 – 8.03]	**11188212**	517 – 528 [20.35 – 20.79]	**157B8029**
205 – 216 [8.07 – 8.50]	**157B8003**	529 – 540 [20.83 – 21.26]	**11188198**
217 – 228 [8.54 – 8.98]	**11188211**	541 – 552 [21.30 – 21.73]	**157B8010**
229 – 240 [9.02 – 9.45]	**157B8023**	553 – 564 [21.77 - 22.20]	**11188197**
241 – 252 [9.49 – 9.92]	**11188210**	565 – 576 [22.24 – 22.68]	**157B8030**
253 – 264 [9.96 – 10.39]	**157B8004**	577 – 588 [22.72 – 23.15]	**11188196**
265 – 276 [10.43 – 10.87]	**11188209**	589 – 600 [23.19 – 23.62]	**157B8061**
277 – 288 [10.91 – 11.34]	**157B8024**	601 – 612 [23.66 – 24.09]	**11188195**
289 – 300 [11.38 – 11.81]	**11188208**	613 – 624 [24.13 – 24.57]	**157B8081**
301 – 312 [11.85 – 12.28]	**157B8005**	625 – 636 [24.61 – 25.04]	**11188194**
313 – 324 [12.32 – 12.76]	**11188207**	637 – 648 [25.08 – 25.51]	**157B8062**
325 – 336 [12.80 – 13.23]	**157B8025**	649 – 660 [25.55 – 25.98]	**11188189**
337 – 348 [13.27 – 13.70]	**11188206**	661 - 672 [26.02 – 26.46]	**157B8082**
349 – 360 [13.74 – 14.17]	**157B8006**		

PVAS Stay Bolts

PVG 32 modules total length

Table with total length of the PVG 32 depending on the number of PVB modules.

No. of PVB 32	1	2	3	4	5	6	7	8	9	10	11	12
Length mm [in]	119 [4.69]	167 [6.57]	215 [8.46]	263 [10.35]	311 [12.24]	359 [14.13]	407 [16.02]	455 [17.91]	503 [19.80]	551 [21.69]	599 [23.58]	647 [25.47]

PVG 32/16 Combinations

The table of PVB 32 and PVB 16 modules combination, the total length depending on the amount of valve groups.

		PVB 16										
Modules in mm [in]		1	2	3	4	5	6	7	8	9	10	11
PVB 32	1	159 [6.26]	199 [7.83]	239 [9.41]	279 [10.98]	319 [12.56]	359 [14.13]	399 [15.71]	439 [17.28]	479 [18.86]	519 [20.43]	559 [22.01]
	2	207 [8.15]	247 [9.72]	287 [11.30]	327 [12.87]	367 [14.45]	407 [16.02]	447 [17.60]	487 [19.17]	527 [20.74]	567 [22.32]	607 [23.90]
	3	255 [10.04]	295 [11.61]	335 [13.19]	375 [14.76]	415 [16.34]	455 [17.91]	495 [19.49]	535 [21.06]	575 [22.64]	615 [24.21]	655 [25.79]
	4	303 [11.93]	343 [13.50]	383 [15.08]	423 [16.65]	463 [18.23]	503 [19.80]	543 [21.38]	583 [22.95]	623 [24.53]	663 [26.10]	-
	5	351 [13.82]	391 [15.39]	431 [16.97]	471 [18.54]	511 [20.12]	551 [21.69]	591 [23.27]	631 [24.84]	671 [26.42]	-	-
	6	399 [15.71]	439 [17.28]	479 [18.86]	519 [20.43]	559 [22.01]	599 [23.58]	639 [25.16]	-	-	-	-
	7	447 [17.60]	487 [19.17]	527 [20.75]	567 [22.32]	607 [23.90]	647 [25.47]	-	-	-	-	-
	8	495 [19.49]	535 [21.06]	575 [22.64]	615 [24.21]	655 [25.79]	-	-	-	-	-	-
	9	543 [21.38]	583 [22.95]	623 [24.53]	663 [26.10]	-	-	-	-	-	-	-
	10	591 [23.27]	631 [24.84]	671 [26.42]	-	-	-	-	-	-	-	-
	11	639 [25.16]	-	-	-	-	-	-	-	-	-	-

PVAS Stay Bolts

PVG 256/128/32/16 Combinations

The tables of PVB 256/128, 32/16 modules, total length depending on the amount of valve groups.

Stay bolts for PVG 128/256/32/16 combinations consist of 2 different kits:

1. For PVAS containing 2 stay bolts – please look in the *Table 1* below and use the part number before the + symbol.
2. For PVAS containing 3 stay bolts – please look in *Table 1* below and write down the length in millimeters which is the number after the + symbol. Next you add the number from *Table 2* below. Now find the part number for the needed stay bolts in the table *PVAS Part Numbers* on page 207.

O-rings are a part of the PVAS kits – no additional part number needed.

Caution

It is not possible to do combinations exceeding **672 mm**.

Example

For 2 PVB 256 and 1 PVB 128 and 1 PVB 32 and 2 PVB 16: PVAS 1 Part number = **11187681** from *Table 1*.

PVAS 2 = **278** mm from *Table 1* + **152** mm from *Table 2*= 278+152 =430 mm which equals **157B8027** in the PVAS table.

Table 2 – PVG 256/128 combinations

		PVB 256							
Modules (mm)		**0**	**1**	**2**	**3**	**4**	**5**	**6**	**7**
PVB 128	0	11187676+ 40	11187672+ 126	11187673+ 212	11187656+ 298	11187675+ 384	11187696+ 470	11187697+ 556	11187698+ 642
	1	11187320+ 106	11187677+ 192	**11187681+ 278**	11187658+ 364	11187685+ 450	11187687+ 536	11187690+ 622	
	2	11187617+ 172	11187678+ 258	11187682+ 344	11187686+ 430	11187691+ 516	11187704+ 602		
	3	11187655+ 238	11187679+ 324	11187683+ 410	11187705+ 496	11187694+ 582	11187695+ 668		
	4	11187684+ 304	11187680+ 390	11187696+ 476	11187697+ 562	11187689+ 648			
	5	11187658+ 370	11187699+ 456	11187688+ 542	11187710+ 628				
	6	11187693+ 436	11187703+ 522	11187704+ 608					
	7	11187705+ 502	11187694+ 588						
	8	11187692+ 568	11187709+ 654						
	9	11187710+ 634							

PVAS Stay Bolts

Table 2 – PVG 32/16 combinations

		PVB 16										
Modules (mm)		**0**	**1**	**2**	**3**	**4**	**5**	**6**	**7**	**8**	**9**	**10**
PVB 32	**0**	-	64	104	144	184	224	264	304	344	384	424
	1	72	112	**152**	192	232	272	312	352	392	432	-
	2	120	160	200	240	280	320	360	400	440	-	-
	3	168	208	248	288	328	368	408	448	-	-	-
	4	216	256	296	236	276	416	456	-	-	-	-
	5	264	304	344	384	424	464	-	-	-	-	-
	6	312	352	392	432	472	-	-	-	-	-	-
	7	360	400	440	480	-	-	-	-	-	-	-
	8	408	448	488	-	-	-	-	-	-	-	-
	9	456	496	-	-	-	-	-	-	-	-	-
	10	504	-	-	-	-	-	-	-	-	-	-

PVG 32 Combinations Valve Stack Dimensions

PVG 32 Dimensions

PVG 32 with PVE actuator

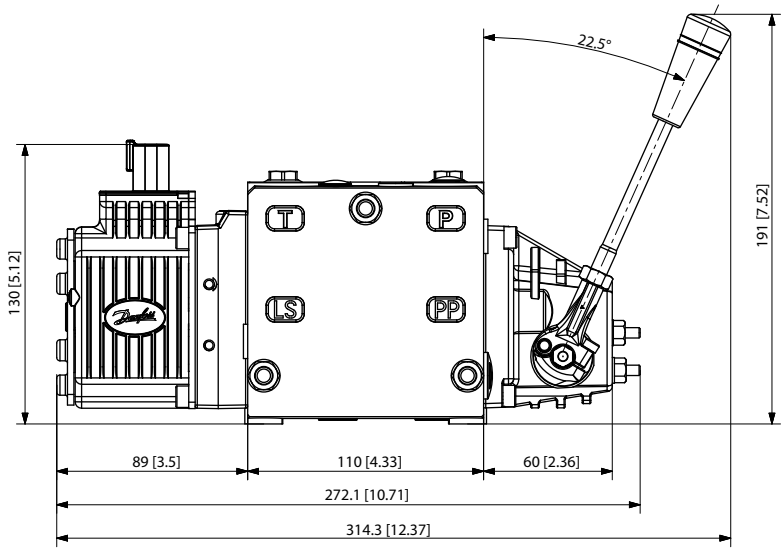

PVG 32 with PVHC

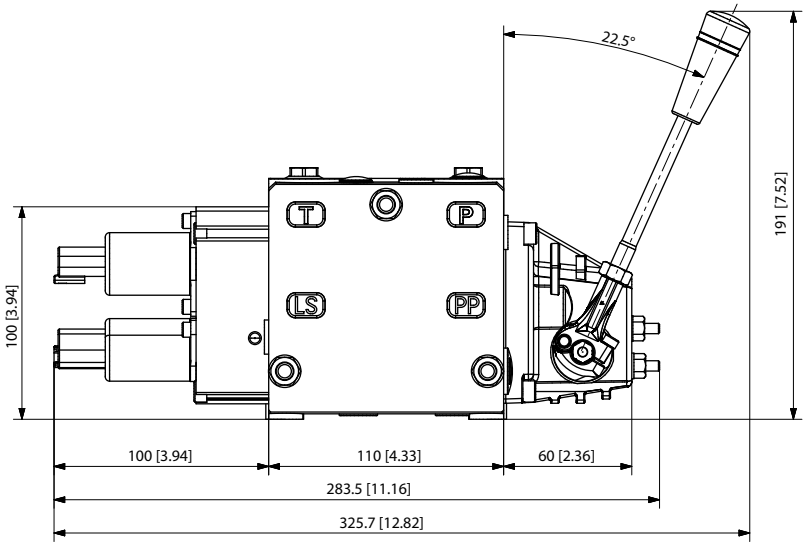

PVG 32 Combinations Valve Stack Dimensions

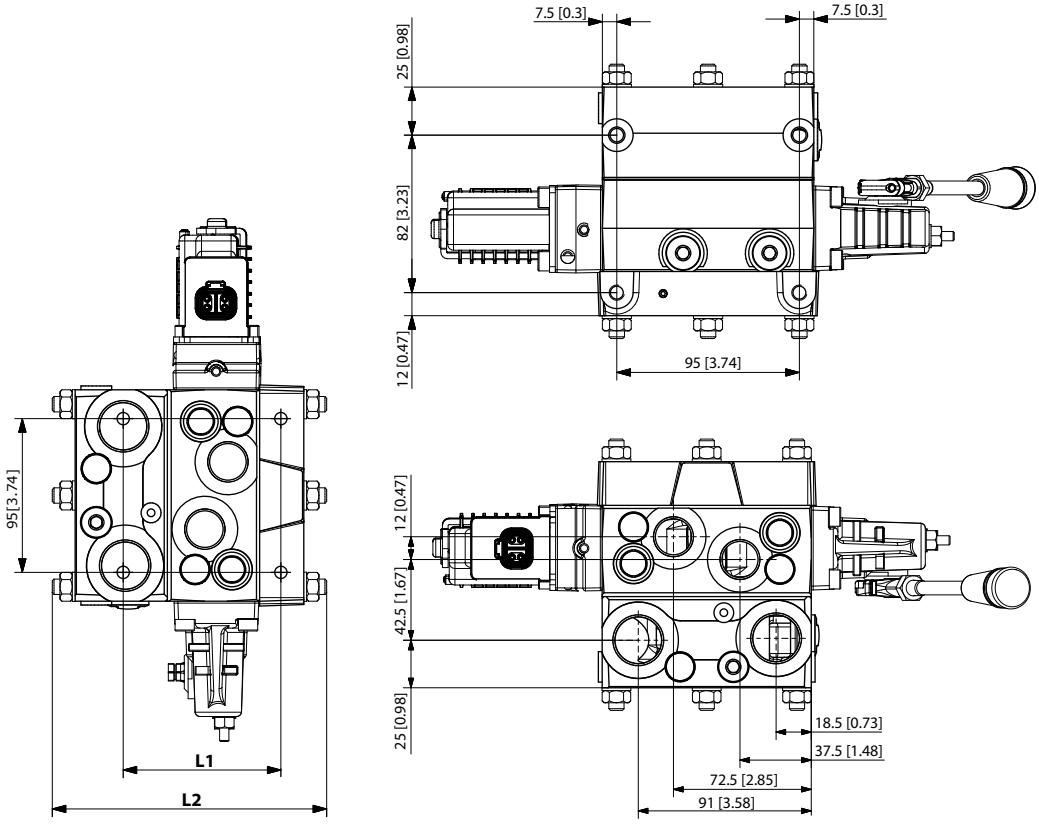

Number of PVB 32		1	2	3	4	5	6	7	8	9	10	11	12
L1	mm [in]	82 [3.23]		178 [7.01]130 [5.12]	226 [8.90]	274 [10.79]	322 [12.68]	370 [14.57]	418 [16.46]	466 [18.35]	514 [20.24]	562 [22.13]	610 [24.02]
L2	130 [5.12mm [in]	141 [5.55]	190 [7.48]	238 [9.37]	287 [11.30]	335 [13.19]	384 [15.12]	432 [17.01]	481 [18.94]	529 [20.83]	578 [22.76]	626 [24.65]	675 [26.57]
Weight	kg [lb]	8,33 [18.36]	11,46 [25.26]	14,53 [32.03]	17,66 [38.93]	20,74 [45.72]	23,81 [52.49]	26,94 [59.39]	30,01 [66.16]	33,09 [72.95]	36,21 [79.83]	39,29 [86.62]	42,26 [93.17]

Weight is for a PVG 32 with PVEO series 7 on each working section and is only approximate.

PVG 32 Combinations Valve Stack Dimensions

PVG 32/16 Dimensions

The table of PVB 32 and PVB 16 combination valve stack dimensions overview table with accompanying drawing.

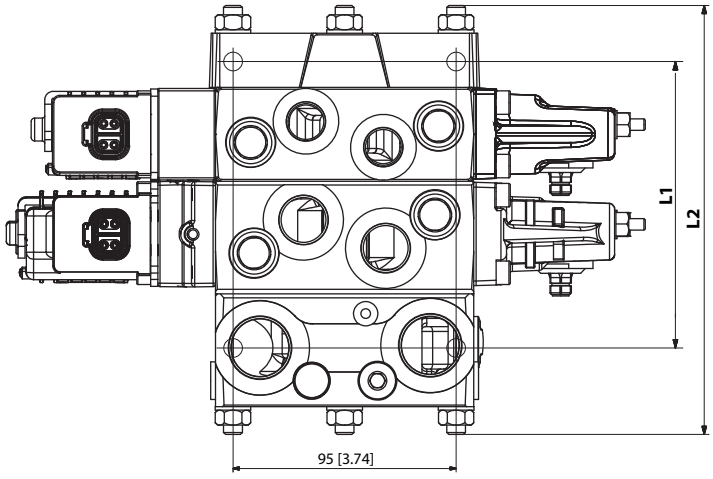

PVB 32/16 combination valve stack dimensions, mm [in]

Number of PVB 32 (down)		Number of PVB 16 modules										
		1	**2**	**3**	**4**	**5**	**6**	**7**	**8**	**9**	**10**	**11**
1	L1	122 [4.80]	162 [6.38]	202 [7.95]	242 [9.53]	282 [11.10]	322 [12.68]	362 [14.25]	402 [15.83]	442 [17.40]	482 [18.98]	522 [20.55]
	L2	189 [7.44]	238 [9.37]	262 [10.31]	311 [12.24]	360 [14.17]	385 [15.16]	434 [17.09]	483 [19.02]	507 [19.96]	551 [21.69]	600 [23.62]
2	L1	170 [6.69]	210 [8.27]	250 [9.84]	290 [11.42]	330 [12.99]	370 [14.57]	410 [16.14]	450 [17.72]	490 [19.29]	530 [20.87]	570 [22.44]
	L2	238 [9.37]	287 [11.30]	311 [12.24]	360 [14.17]	409 [16.10]	434 [17.09]	483 [19.02]	507 [19.96]	551 [21.69]	600 [23.62]	646 [25.43]
3	L1	218 [8.58]	258 [10.16]	298 [11.73]	338 [13.31]	378 [14.88]	418 [16.46]	458 [18.03]	498 [19.61]	538 [21.18]	578 [22.76]	-
	L2	287 [11.30]	336 [13.23]	360 [14.17]	409 [16.10]	458 [18.03]	483 [19.02]	527 [20.75]	576 [22.68]	600 [23.62]	646 [25.43]	-
4	L1	266 [10.47]	306 [12.05]	346 [13.62]	386 [15.20]	426 [16.77]	466 [18.35]	506 [19.92]	546 [21.50]	586 [23.07]	-	-
	L2	336 [13.23]	385 [15.16]	409 [16.10]	458 [18.03]	483 [19.02]	527 [20.75]	576 [22.68]	622 [24.49]	646 [25.43]	-	-
5	L1	314 [12.36]	354 [13.94]	394 [15.51]	434 [17.09]	474 [18.66]	514 [20.24]	554 [21.81]	594 [23.39]	-	-	-
	L2	385 [15.16]	434 [17.09]	458 [18.03]	507 [19.96]	551 [21.69]	576 [22.68]	622 [24.49]	670 [26.38]	-	-	-
6	L1	362 [14.25]	402 [15.83]	442 [17.40]	482 [18.98]	522 [20.55]	562 [22.13]	602 [23.70]	-	-	-	-
	L2	434 [17.09]	483 [19.02]	507 [19.96]	551 [21.69]	600 [23.62]	622 [24.49]	670 [26.38]	-	-	-	-
7	L1	410 [16.14]	450 [17.72]	490 [19.29]	530 [20.87]	570 [22.44]	610 [24.02]	-	-	-	-	-
	L2	483 [19.02]	527 [20.75]	551 [21.69]	600 [23.62]	646 [25.43]	670 [26.38]	-	-	-	-	-
8	L1	458 [18.03]	498 [19.61]	538 [21.18]	578 [22.76]	-	-	-	-	-	-	-
	L2	527 [20.75]	576 [22.68]	600 [23.62]	646 [25.43]	-	-	-	-	-	-	-

PVG 32 Combinations Valve Stack Dimensions

PVB 32/16 combination valve stack dimensions, mm [in] (continued)

Number of PVB 32 (down)		Number of PVB 16 modules										
		1	**2**	**3**	**4**	**5**	**6**	**7**	**8**	**9**	**10**	**11**
9	L1	506 [19.92]	546 [21.50]	586 [23.07]	-	-	-	-	-	-	-	-
	L2	576 [22.68]	622 [24.49]	646 [25.43]	-	-	-	-	-	-	-	-
10	L1	554 [21.81]	594 [23.39]	-	-	-	-	-	-	-	-	-
	L2	622 [24.49]	670 [26.38]	-	-	-	-	-	-	-	-	-
11	L1	602 [23.70]	-	-	-	-	-	-	-	-	-	-
	L2	670 [26.38]	-	-	-	-	-	-	-	-	-	-

Weight for a PVG 32/16 valve stack

The combined weight of a PVG 32/16 valve stack can be defined like this:

(Numbers of PVB 32 x 4,42) + (numbers of PVB 16 x 3,67) + 3,6 = Weight in kg

(Numbers of PVB 32 x 9.75) + (numbers of PVB 16 x 8.09) + 7.95 = Weight in lb

PVG 32 Combinations Valve Stack Dimensions

PVG 100/32 Dimensions

The table of PVB 100 and PVB 32 combination valve stack dimensions overview table with accompanying drawing.

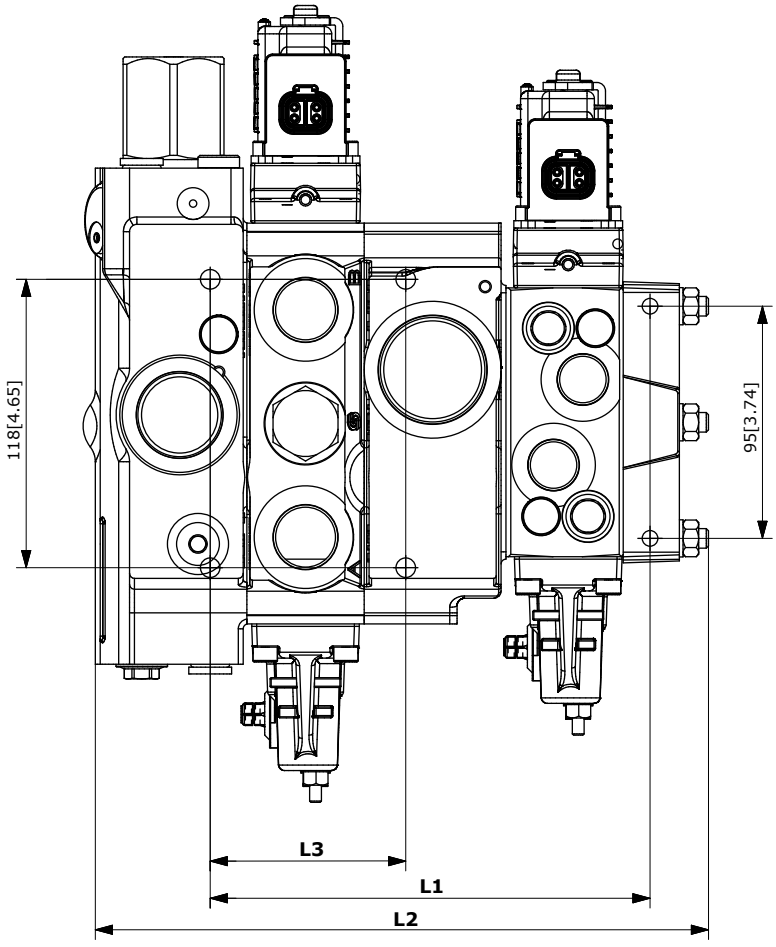

PVB 100/32 combination valve stack dimensions, mm [in]

Number of PVB 100 (down)		Number of PVB 32 modules										
		1	**2**	**3**	**4**	**5**	**6**	**7**	**8**	**9**	**10**	**11**
1	L1	168	216	264	312	360	408	456	504	552	600	648
		[6,61]	[8,50]	[10,39]	[12,28]	[14,17]	[16,06]	[17,95]	[19,84]	[21,73]	[23,62]	[25,51]
	L3	80 mm [3.15 in]										
2	L1	216	264	312	360	408	456	504	552	600	648	696
		[8,50]	[10,39]	[12,28]	[14,17]	[16,06]	[17,95]	[19,84]	[21,73]	[23,62]	[25,51]	[27,40]
	L3	128 mm [5.04 in]										
3	L1	264	312	360	408	456	504	552	600	648	696	744
		[10,39]	[12,28]	[14,17]	[16,06]	[17,95]	[19,84]	[21,73]	[23,62]	[25,51]	[27,40]	[29,29]
	L3	176 mm [6.93 in]										
4	L1	312	360	408	456	504	552	600	648	696	744	792
		[12,28]	[14,17]	[16,06]	[17,95]	[19,84]	[21,73]	[23,62]	[25,51]	[27,40]	[29,29]	[31,18]
	L3	224 mm [8.82 in]										

PVG 32 Combinations Valve Stack Dimensions

PVB 100/32 combination valve stack dimensions, mm [in] (continued)

Number of PVB 100 (down)		Number of PVB 32 modules										
		1	**2**	**3**	**4**	**5**	**6**	**7**	**8**	**9**	**10**	**11**
5	L1	360	408	456	504	552	600	648	696	744	792	840
		[14,17]	[16,06]	[17,95]	[19,84]	[21,73]	[23,62]	[25,51]	[27,40]	[29,29]	[31,18]	[33,07]
	L3	272 mm [10.71 in]										
6	L1	408	456	504	552	600	648	696	744	792	840	888
		[16,06]	[17,95]	[19,84]	[21,73]	[23,62]	[25,51]	[27,40]	[29,29]	[31,18]	[33,07]	[34,96]
	L3	320 mm [12.60 in]										
7	L1	456	504	552	600	648	696	744	792	840	888	936
		[17,95	[19,84	[21,73	[23,62	[25,51	[27,40	[29,29	[31,18	[33,07	[34,96	[36,85
	L3	368 mm [14.49 in]										
8	L1	504	552	600	648	696	744	792	840	888	936	984
		[19,84]	[21,73]	[23,62]	[25,51]	[27,40]	[29,29]	[31,18]	[33,07]	[34,96]	[36,85]	[38,74]
	L3	416 mm [16.38 in]										

Weight for a PVG 100/32 valve stack

The combined weight of a PVG 100/32 valve stack can be defined like this:

(Numbers of PVB 100 x 7) + (numbers of PVB 32 x 4.42) + 10 = Weight (kg)

(Numbers of PVB 100 x 9.37) + (numbers of PVB 32 x 9.75) + 22 = Weight (lb)

PVG 32 Combinations Valve Stack Dimensions

PVG 120/32 Dimensions

The table of PVB 120 and PVB 32 combination valve stack dimensions overview table with accompanying drawing.

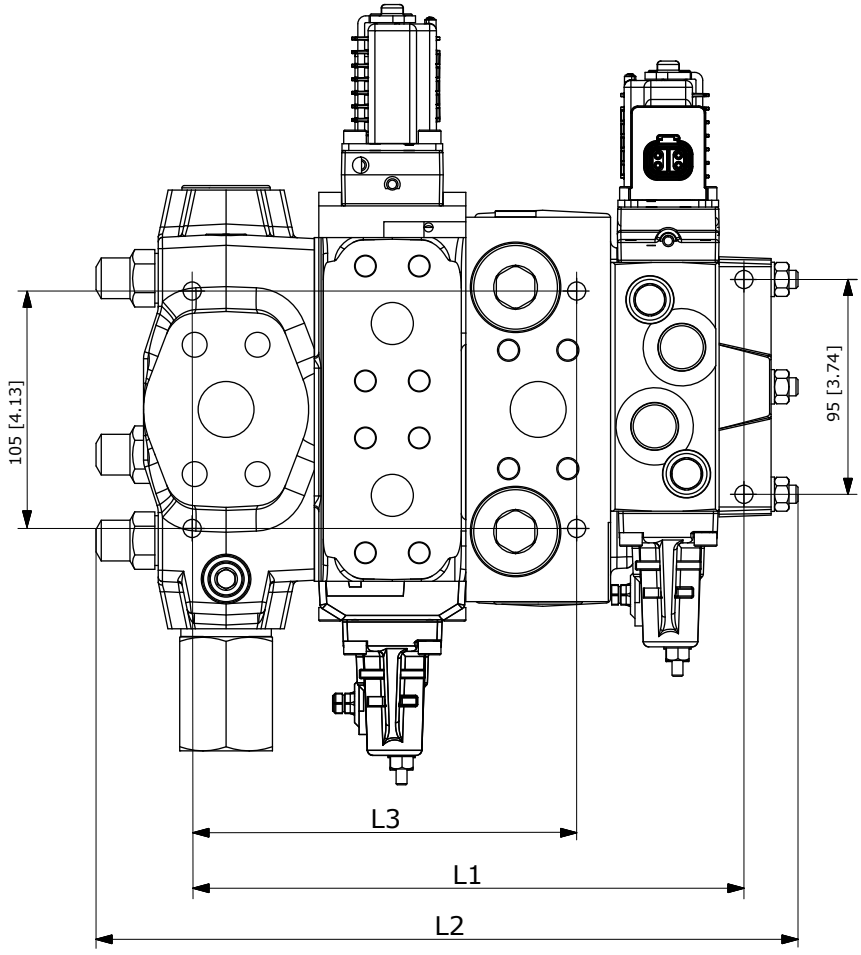

There is a horizontal difference 62.5 mm [2.46 in] in the mounting plane of the PVG 120/PVG 16. Due to the large size of the PVG 120 interface-module it is necessary to have at least one PVG 32 module between the PVGI and the first PVG 32 slice.

PVB 120/32 combination valve stack dimensions, mm [in]

Number of PVB 120 (down)		Number of PVB 32 modules										
		1	2	3	4	5	6	7	8	9	10	11
1	L1	292	340	388	436	484	532	580	628	676	724	772
		[11.50]	[13.39]	[15.28]	[17.17]	[19.06]	[20.94]	[22.83]	[24.72]	[26.61]	[28.50]	[30.39]
	L3	170 mm [6.69 in]										
2	L1	359	407	455	503	551	599	647	695	743	791	839
		[14.13]	[16.02]	[17.91]	[19.80]	[21.69]	[23.58]	[25.47]	[27.36]	[29.25]	[31.14]	[33.03]
	L3	237 mm [9.33 in]										
3	L1	426	474	522	570	618	666	714	762	810	858	906
		[16.77]	[18.66]	[20.55]	[22.44]	[24.33]	[26.22]	[28.11]	[30.00]	[31.89]	[33.78]	[35.67]
	L3	304 mm [11.91 in]										

PVG 32 Combinations Valve Stack Dimensions

PVB 120/32 combination valve stack dimensions, mm [in] (continued)

Number of PVB 120 (down)		Number of PVB 32 modules										
		1	**2**	**3**	**4**	**5**	**6**	**7**	**8**	**9**	**10**	**11**
4	L1	493	541	589	637	685	733	781	829	877	925	973
		[19.41]	[21.30]	[23.19]	[25.08]	[26.97]	[28.86]	[30.75]	[32.64]	[34.53]	[36.42]	[38.31]
	L3	371 mm [14.61 in]										
5	L1	560	608	656	704	752	800	848	896	944	992	1040
		[22.05]	[23.94]	[25.83]	[27.72]	[29.61]	[31.50]	[33.39]	[35.28]	[37.17]	[39.06]	[40.94]
	L3	438 mm [17.24 in]										
6	L1	627	675	723	771	819	867	915	963	1011	1059	1107
		[24.69]	[26.57]	[28.46]	[30.35]	[32.24]	[34.13]	[36.02]	[37.91]	[39.80]	[41.69]	[43.58]
	L3	505 mm [19.88 in]										
7	L1	694	742	790	838	886	934	982	1030	1078	1126	1174
		[27.32]	[29.21]	[31.10]	[32.99]	[34.88]	[36.77]	[38.66]	[40.55]	[42.44]	[44.33]	[46.22]
	L3	572 mm [22.52 in]										
8	L1	761	809	857	905	953	1001	1049	1097	1145	1193	1241
		[29.96]	[31.85]	[33.74]	[35.63]	[37.52]	[39.41]	[41.30]	[43.19]	[45.08]	[46.97]	[48.86]
	L3	639 mm [25.16 in]										

Weight for a PVG 120/32 valve stack

The combined weight of a PVG 120/32 valve stack can be defined like this:

(Numbers of PVB 120 x 13.5) + (numbers of PVB 32 x 4.42) + 11.5 = Weight (kg)

(Numbers of PVB 120 x 29.76) + (numbers of PVB 32 x 9.75) + 25.4 = Weight (lb)

PVG 32 Combinations Valve Stack Dimensions

PVG 128/32 Dimensions

The table of PVB 128 and PVB 32 combination valve stack dimensions overview table with accompanying drawing.

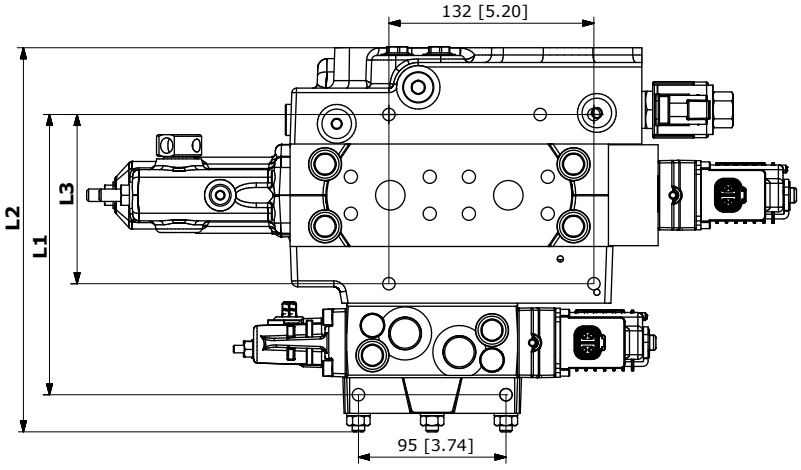

PVB 128/32 combination valve stack dimensions, mm [in]

Number of PVB 128 (down)		Number of PVB 32 modules										
		1	2	3	4	5	6	7	8	9	10	11
1	L1	181 [7.13]	229 [9.02]	277 [10.91]	325 [12.80]	373 [14.69]	421 [16.57]	469 [18.46]	517 [20.35]	565 [22.24]	613 [24.13]	661 [26.02]
	L2	249.5 [9.82]	297,5 [11,71]	346,5 [13,64]	394,5 [15,53]	417,5 [16,44]	443,5 [17,46]	540,5 [21,28]	588,5 [23,17]	637,5 [25,10]	685,5 [26,99]	734,5 [28,92]
	L3	98,5 mm [3.88 in]										
2	L1	247,0 [9,72]	295,0 [11,61]	343,0 [13,50]	391,0 [15,39]	439,0 [17,28]	487,0 [19,17]	535,0 [21,06]	583,0 [22,95]	631,0 [24,84]	–	–
	L2	321,5 [12,66]	370,5 [14,59]	418,5 [16,48]	467,5 [18,41]	515,5 [20,30]	564,5 [22,22]	612,5 [24,11]	661,5 [26,04]	709,5 [27,93]	–	–
	L3	164,5 mm [6.48 in]										
3	L1	313,0 [12,32]	361,0 [14,21]	409,0 [16,10]	457,0 [17,99]	505,0 [19,88]	553,0 [21,77]	601,0 [23,66]	649,0 [25,55]	–	–	–
	L2	382,5 [15,06]	431,5 [16,99]	479,5 [18,88]	528,5 [20,81]	576,5 [22,70]	625,5 [24,63]	673,5 [26,52]	722,5 [28,44]	–	–	–
	L3	230,5 mm [9.07 in]										
4	L1	379,0 [14,92]	427,0 [16,81]	475,0 [18,70]	523,0 [20,59]	571,0 [22,48]	619,0 [24,37]	667,0 [26,26]	–	–	–	–
	L2	455,5 [17,93]	503,5 [19,82]	552,5 [21,75]	600,5 [23,64]	649,5 [25,57]	697,5 [27,46]	746,5 [29,39]	–	–	–	–
	L3	296,5 mm [11.67]										
5	L1	445,0 17,52	493,0 19,41	541,0 21,30	589,0 23,19	637,0 25,08	–	–	–	–	–	–
	L2	515,5 [20,30]	564,5 [22,22]	612,5 [24,11]	661,5 [26,04]	709,5 [27,93]	–	–	–	–	–	–
	L3	362,5 mm [14.27]										

PVG 32 Combinations Valve Stack Dimensions

PVB 128/32 combination valve stack dimensions, mm [in] (continued)

Number of PVB 128 (down)		Number of PVB 32 modules										
		1	**2**	**3**	**4**	**5**	**6**	**7**	**8**	**9**	**10**	**11**
6	L1	511,0 20,12	559,0 22,01	607,0 23,90	655,0 25,79	–	–	–	–	–	–	–
	L2	588,5 [23,17]	637,5 [25,10]	685,50 [26,99]	734,50 [28,92]	–	–	–	–	–	–	–
	L3	428,5 mm [16.87]										
7	L1	577,0 22,72	625,0 24,61	673,0 26,50	–	–	–	–	–	–	–	–
	L2	649,5 [25,57]	697,5 [27,46]	746,5 [29,39]	–	–	–	–	–	–	–	–
	L3	494,5 mm [19.47]										
8	L1	643,0 25,31	–	–	–	–	–	–	–	–	–	–
	L2	722,50 [28,44]	–	–	–	–	–	–	–	–	–	–
	L3	560,5 mm [22.07]										

Weight for a PVG 128/32 valve stack

The weight is for a combined PVG 128/32 valve stack with a PVEO Series 7 on each working section and is only approximate, can be defined like this:

(Numbers of PVB 128 x 16.9) + (numbers of PVB 32 x 4,42) + 17.5 = Weight (kg)

(Numbers of PVB 128 x 37.26) + (numbers of PVB 32 x 9.75) + 38.6 = Weight (lb)

PVG 32 Combinations Valve Stack Dimensions

PVG 256/32 Dimensions

The table of PVB 256 and PVB 32 combination valve stack dimensions overview table with accompanying drawing.

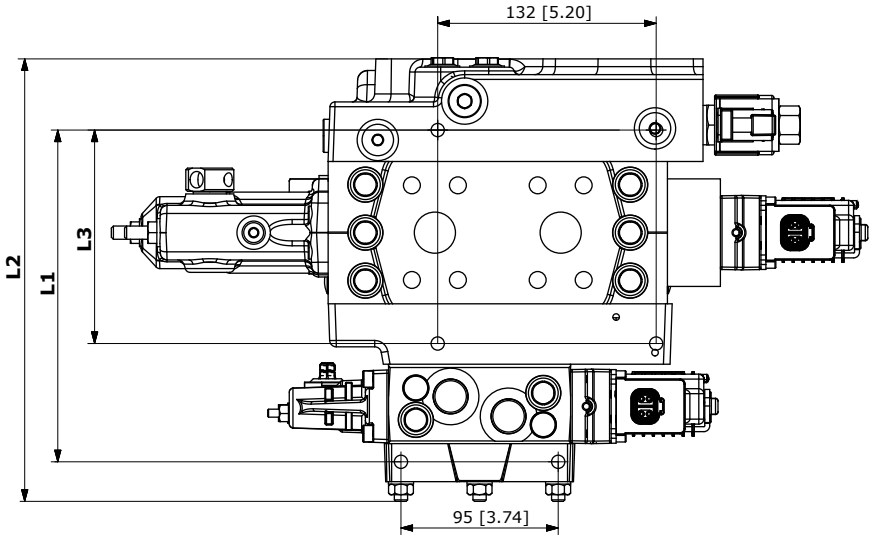

PVB 256/32 combination valve stack dimensions, mm [in]

Number of PVB 256 (down)		Number of PVB 32 modules									
		1	**2**	**3**	**4**	**5**	**6**	**7**	**8**	**9**	**10**
1	L1	201 [7.91]	249 [9.80]	297 [11.69]	345 [13.58]	393 [15.47]	441 [1.36]	489 [19.25]	537 [21.14]	585 [23.03]	633 [24.92]
	L2	273,5 [10.77]	321,5 [12.66]	370,5 [14.59]	418,5 [16.48]	467,5 [18.41]	515,5 [20.30]	564,5 [22.22]	612,5 [24.11]	661,5 [26.04]	709,5 [27.93]
	L3	118,5 mm [4.67 in]									
2	L1	287 [11.30]	335 [13.19]	383 [15.08]	431 [16.97]	479 [18.86]	527 [20.75]	575 [22.64]	623 [24.53]	671 [26.42]	–
	L2	358,5 [14.11]	406,5 [16.0]	455,5 [17.93]	503,5 [19.82]	552,5 [21.75]	600,5 [23.64]	649,5 [25.57]	697,5 [27.46]	746,5 [29.9]	–
	L3	204,5 mm [8.05 in]									
3	L1	373 [14.69]	421 [16.57]	469 [18.46]	517 [20.35]	565 [22.24]	613 [24.13]	661 [26.02]	–	–	–
	L2	443,5 [17,46]	491,5 [19,35]	540,5 [21,28]	588,5 [23,17]	637,5 [25,10]	685,5 [26,99]	734,5 [28,92]	–	–	–
	L3	290,5 mm [11.44 in]									
4	L1	459 [18,07]	507 [19,96]	555 [21,85]	603 [23,74]	651 [25,63]	–	–	–	–	–
	L2	528,5 [20,81]	576,5 [22,70]	625,5 [24,63]	673,5 [26,52]	722,5 [28,44]	–	–	–	–	–
	L3	376,5 mm [14.82 in]									
5	L1	545 [21,46]	593 [23,35]	641 [25,24]	–	–	–	–	–	–	–
	L2	625,5 [24,63]	673,5 [26,52]	722,5 [28,44]	–	–	–	–	–	–	–
	L3	462,5 mm [18.21 in]									

PVG 32 Combinations Valve Stack Dimensions

PVB 256/32 combination valve stack dimensions, mm [in] (continued)

Number of PVB 256 (down)		Number of PVB 32 modules									
		1	**2**	**3**	**4**	**5**	**6**	**7**	**8**	**9**	**10**
6	L1	631 [24,84]	–	–	–	–	–	–	–	–	–
	L2	709,5 [27,93]	–	–	–	–	–	–	–	–	–
	L3	548,5 mm [21.59 in]									

Weight for a PVG 256/32 valve stack

The weight is for a combined PVG 256/32 valve stack with a PVEO Series 7 on each working section and is only approximate, can be defined like this:

(Numbers of PVB 256 x 20,9) + (numbers of PVB 32 x 4,42) + 17.5 = Weight (kg)

(Numbers of PVB 256 x 46.08) + (numbers of PVB 32 x 9.75) + 38.6 = Weight (lb)

ENGINEERING
TOMORROW

Products we offer:

- DCV directional control valves
- Electric converters
- Electric machines
- Electric motors
- Hydrostatic motors
- Hydrostatic pumps
- Orbital motors
- PLUS+1® controllers
- PLUS+1® displays
- PLUS+1® joysticks and pedals
- PLUS+1® operator interfaces
- PLUS+1® sensors
- PLUS+1® software
- PLUS+1® software services, support and training
- Position controls and sensors
- PVG proportional valves
- Steering components and systems
- Telematics

Danfoss Power Solutions is a global manufacturer and supplier of high-quality hydraulic and electric components. We specialize in providing state-of-the-art technology and solutions that excel in the harsh operating conditions of the mobile off-highway market as well as the marine sector. Building on our extensive applications expertise, we work closely with you to ensure exceptional performance for a broad range of applications. We help you and other customers around the world speed up system development, reduce costs and bring vehicles and vessels to market faster.

Danfoss Power Solutions – your strongest partner in mobile hydraulics and mobile electrification.

Go to www.danfoss.com for further product information.

We offer you expert worldwide support for ensuring the best possible solutions for outstanding performance. And with an extensive network of Global Service Partners, we also provide you with comprehensive global service for all of our components.

Comatrol
www.comatrol.com

Turolla
www.turollaocg.com

Hydro-Gear
www.hydro-gear.com

Daikin-Sauer-Danfoss
www.daikin-sauer-danfoss.com

Local address:

Danfoss
Power Solutions (US) Company
2800 East 13th Street
Ames, IA 50010, USA
Phone: +1 515 239 6000

Danfoss
Power Solutions GmbH & Co. OHG
Krokamp 35
D-24539 Neumünster, Germany
Phone: +49 4321 871 0

Danfoss
Power Solutions ApS
Nordborgvej 81
DK-6430 Nordborg, Denmark
Phone: +45 7488 2222

Danfoss
Power Solutions Trading (Shanghai) Co., Ltd.
Building #22, No. 1000 Jin Hai Rd
Jin Qiao, Pudong New District
Shanghai, China 201206
Phone: +86 21 3418 5200

Danfoss can accept no responsibility for possible errors in catalogues, brochures and other printed material. Danfoss reserves the right to alter its products without notice. This also applies to products already on order provided that such alterations can be made without subsequent changes being necessary in specifications already agreed.
All trademarks in this material are property of the respective companies. Danfoss and the Danfoss logotype are trademarks of Danfoss A/S. All rights reserved.

Bilag 2

ENGINEERING
TOMORROW

Technical Information

PVE Series 7
Electro-hydraulic Actuators

www.danfoss.com

Revision history

Table of revisions

Date	Changed	Rev
July 2018	Minor update.	0202
June 2018	PVE actuation, connector image changes.	0201
May 2018	Restored missing information.	0105
April 2018	Minor updates.	0104
February 2017	Added detailed Fault Monitoring description	0103
January 2017	Minor updates	0102
November 2016	First edition	0101

Contents

PVE Electrical Actuator

PVE Series 7 Electrical Actuator 5
PVE Series 7 variants overview 6

PVEO

PVEO Schematics and Dimensions 9
PVEO Technical Data 9
PVEO Reaction Times 10
PVEO Variants for PVG 11

PVEO-HP

PVEO-HP Schematics and Dimensions 13
PVEO-HP Technical Data 13
PVEO-HP Reaction Times 14
PVEO-HP Variants for PVG 15

PVEM

PVEM Schematics and Dimensions 17
PVEM Technical Data 17
PVEM Reaction Times 19
PVEM Hysteresis and Ripple 19
PVEM Variants for PVG 20

PVEA

PVEA Schematics and Dimensions 22
PVEA Technical Data 22
PVEA Reaction Times 24
PVEA Hysteresis and Ripple 24
PVEA Variants for PVG 25

PVEH

PVEH Schematics and Dimensions 27
PVEH Technical Data 27
PVEH Reaction Times 29
PVEH Hysteresis and Ripple 29
PVEH Variants for PVG 30

PVES

PVES Schematics and Dimensions 33
PVES Technical Data 33
PVES Reaction Times 35
PVES Hysteresis and Ripple 35
PVES Variants for PVG 36

Connector Overview

Connector Overview 37

Fault Monitoring and Fault Reaction

Generic Fault Reaction 39
Fault Reaction Overview 40
Error Pin Specification 40

Functionality Overview

Standard and Fixed US 0-10 Vdc 41
PWM Voltage Control 42
Ramp (-R) 44
Quick Reaction (-Q) 45
Float B-Port (-FLB) 46
Float A-Port (-FLA) 47
PVE Power Save 47

Special Features

Direction Indication (-DI) 48
Dedicated Float Pin (UF) 50

Contents

Spool Position (SP) 51
Neutral Power-OFF (NP) 52
Disable Mode 53

Performance Overview

PVE S7 Reaction Times 54
Hysteresis and Ripple 54
Current Consumption 55
Oil Consumption 55

Dimension Overview

Dimension Overview for PVE Series 7 56

PVE Electrical Actuator

PVE Series 7 Electrical Actuator

The analog PVE Series 7 is an electro-hydraulic actuator used to control a single work section of a PVG proportional valve group. The PVE Series 7 actuator program includes variants with different performance levels and features for PVG 32/100/120/128/256.

The actuator positions the main spool in a PVG work section in order to control either the flow or the pressure of the oil distributed to/from the work function. The control signal to the actuator is an analog voltage signal, enabling the user to operate the work function remotely by means of a joystick, a controller or the similar.

The analog PVE Series 7 actuator program features five different main hydraulic principle variants (PVEO/PVEM/PVEA/PVEH/PVES). The different hydraulic principles combined with the different solenoid valve regulation principles determine whether the actuator controls the spool proportionally according to a demand signal or ON/OFF according to a voltage signal.

The electro-hydraulic solenoid valve bridge of the actuator is available in different designs utilizing different regulation principles, depending on performance variant. The actuator positions the main spool by distributing pilot oil pressure to either side of it, pressurizing one side by pilot pressure while relieving the opposite side to tank and vice versa, as illustrated below. All proportional actuators feature a closed-loop spool control and continuous fault monitoring.

PVG 32 with PVEO/PVEM (PVEO without LVDT)

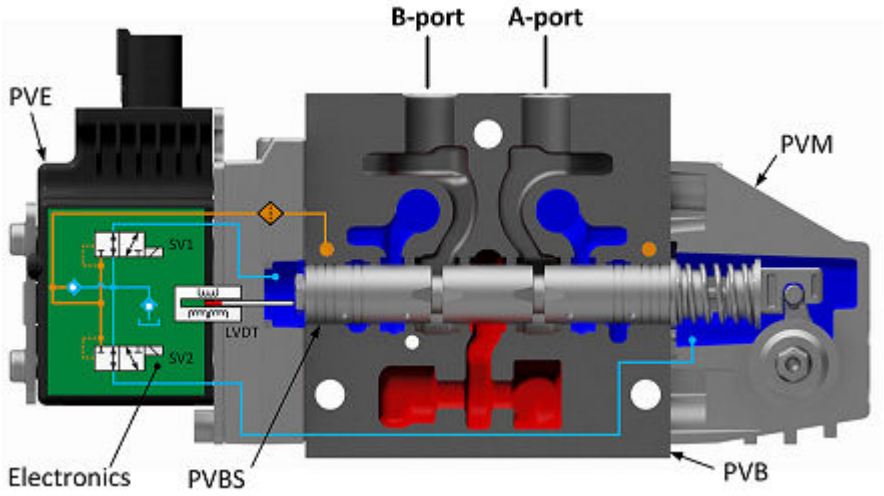

PVE Electrical Actuator

PVG 32 with PVEH/PVES

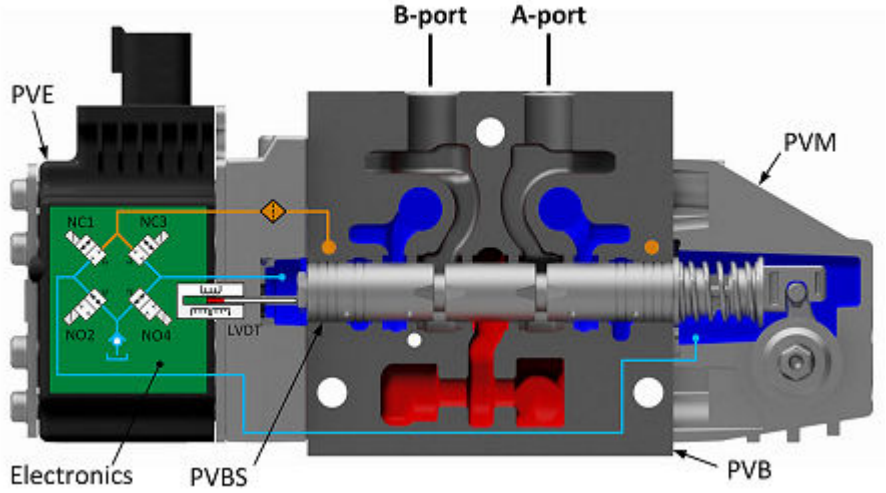

PVEA has the same housing as PVEO/PVEM and similar hydraulic principle as PVEH/PVES, but with fixed orifices instead of NO2 and NO4.

PVE Series 7 variants overview

Schematic	Description
PVEO schematic 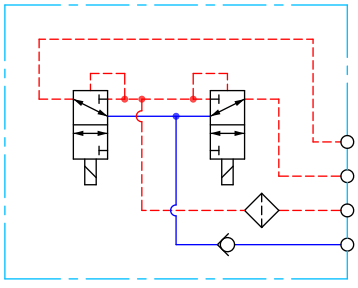 P109195	**PVEO** – ON/OFF voltage control for non-proportional functions, see *PVEO* • Neutral position or max. spool stroke according to control signal • 12 V_{DC} or 24 V_{DC} supply voltage • DEUTSCH, AMP or DIN/Hirschman connectors • Standard PVE pilot oil pressure of 13.5 bar [196 psi] • LED only indicating Power ON or Power OFF • Ramp (-R) or Direction Indication output (-DI) functionality
PVEO-HP schematic 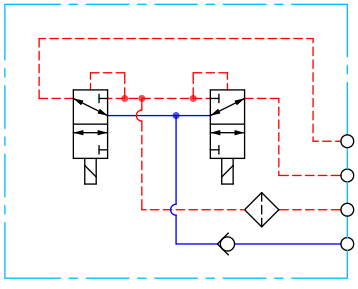 P109195	**PVEO-HP** – ON/OFF voltage control for non-proportional functions, see *PVEO-HP* • Neutral position or max. spool stroke according to control signal • 12 V_{DC} or 24 V_{DC} supply voltage • DEUTSCH, AMP or DIN/Hirschman connectors • To be used with PVH/PVHC pilot oil pressure of 25 bar • LED only indicating Power ON or Power OFF

PVE Electrical Actuator

Schematic	Description
PVEM schematic 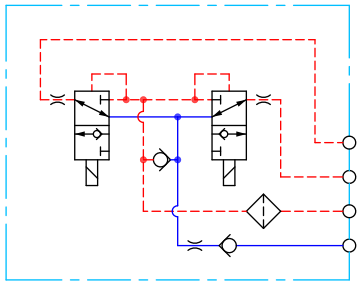 P109196	**PVEM** – proportional spool control for functions with medium performance demands, see *PVEM* • 9–32 V_{DC} multi-voltage power supply • DIN or Hirschman connectors • Standard PVE pilot oil pressure of 13.5 bar [196 psi] • LED indicating error state and passive fault monitoring • Float (-F), quick Ramp (-R) or Quick reaction functionality (-Q)
PVEA schematic 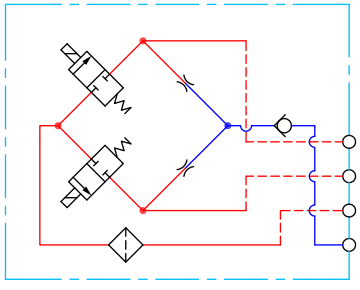 P109197	**PVEA** – proportional spool control for functions with high performance demands, see *PVEA* • 9–32 V_{DC} multi-voltage power supply • Variants available with DEUTSCH or AMP connectors • Standard PVE pilot oil pressure of 13.5 bar [196 psi] • LED indicating error state and active or passive fault monitoring • Direction Indication output (-DI) or Neutral Power-Off (-NP) functionality
PVEH schematic 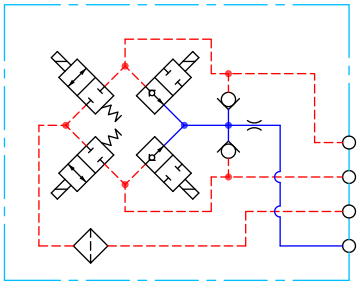 P109198	**PVEH** – proportional spool control for functions with high performance demands, see *PVEH* • 9–32 V_{DC} multi-voltage power supply • DEUTSCH, AMP or DIN/Hirschman connectors • Standard PVE pilot oil pressure of 13.5 bar [196 psi] • LED indicating error state and active or passive fault monitoring • Float (-F), Direction Indication output (-DI), Neutral Power-Off (-NP), Spool Position output (-SP) or 0-10 V_{DC} control signal (-U) functionality
PVES Schematic 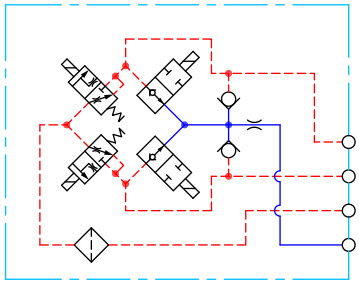 P109199	**PVES** – proportional spool control for functions with high performance and reaction demands, see *PVES* • 9–32 V_{DC} multi-voltage power supply • Analog voltage control signal 25-75% of supply voltage • DEUTSCH, AMP or DIN/Hirschman connectors • Standard PVE pilot oil pressure of 13.5 bar [196 psi] • LED indicating error state and active or passive fault monitoring • Variants available with Spool Position output (-SP) or 0-10 V_{DC} control signal (-U) functionality

PVEO

The PVEO actuator is a non-proportional ON/OFF control actuator with open-loop spool control primarily used to control simple ON/OFF work functions where a proportional control of speed or oil flow is not a requirement

The PVEO is available in two different performance variants, the standard PVEO and the PVEO-R with ramp.

PVEO

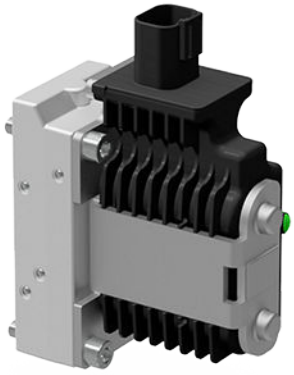

PVEO functionality

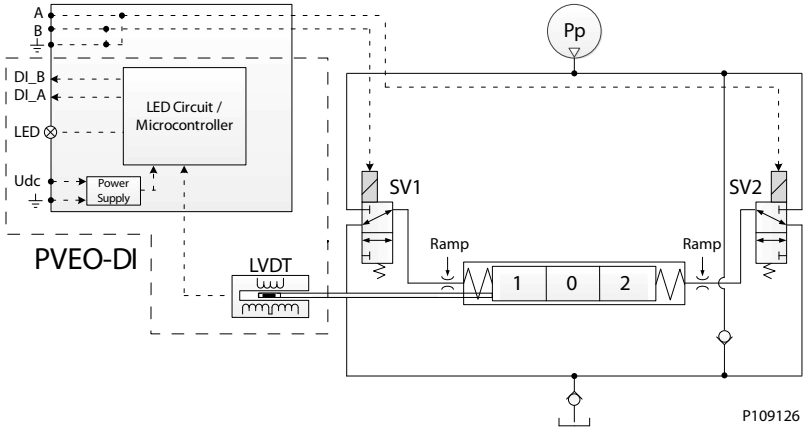

The standard PVEO functionality includes the simplest electric circuit of the PVE Series 7 actuator program, using a fixed 12 Vdc or 24 Vdc supply voltage or signal voltage and a simple LED circuit to control the LED light indicating Power ON/OFF.

The PVEO-DI variant includes an LVDT spool position monitor and a more advanced electric circuit with an embedded micro-controller and separate power supply to handle the Direction Indication functionality.

An energization of solenoid valve SV1 and a simultaneous de-energization of SV2 will cause the main spool to move to the right direction and vice versa. If both SV1 and SV2 are energized or de-energized simultaneously, the main spool stays locked in its neutral position.

PVEO

PVEO Schematics and Dimensions

Schematics

PVEO	PVEO-R
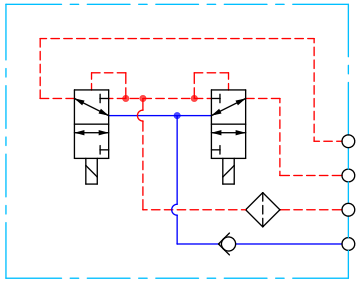 P109195	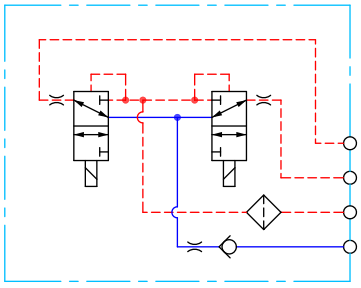 P109200

Dimensions

PVEO	Connector height
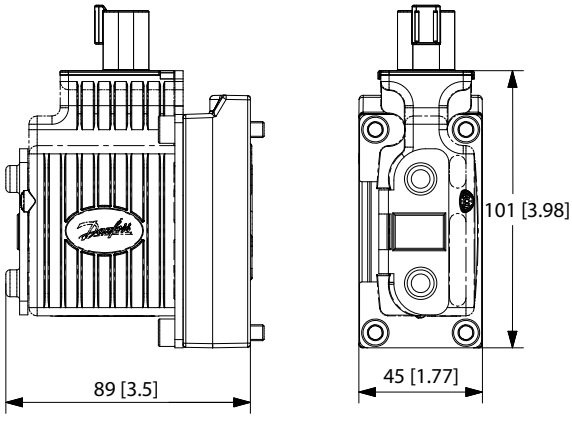 P109231	DEU = 30 mm [1.2 in] DIN = 40 mm [1.6]

PVEO Technical Data

Control Specification

Description	Type	Value	
Supply Voltage (Udc)	Rated	12 Vdc	24 Vdc
	Range	11 to 15 Vdc	22 to 30 Vdc
	Max. ripple	5%	
Current Consumption	Typical	480 mA	250 mA
	Minimum	430 mA	220 mA
	Maximum	950 mA	480 mA

PVEO

Operating Conditions

Description	Type	Value	
Pilot Pressure	Nominal	13.5 bar	[196 psi]
	Minimum	10.0 bar	[145 psi]
	Maximum	15.0 bar	[218 psi]
Oil Consumption	Neutral	0.0 l/min	[0.0 gal/min]
	Locked position	0.0 l/min	[0.0 gal/min]
	Actuating	0.9 l/min	[0.24 gal/min]
	Actuating (PVEO-R)	0.3 l/min	[0.08 gal/min]
Storage Temperature	Ambient	-50 to +90°C	[-58 to +194°F]
Operating Temperature	Ambient	-40 to +90°C	[-40 to +194°F]
Oil Viscosity	Operating range	12 to 75 cSt	[65 to 347 SUS]
	Minimum	4 cSt	[39 SUS]
	Maximum	460 cSt	[2128 SUS]
Oil Cleanliness	Maximum	18/16/13 (according to ISO 4406)	

LED characteristic

Color	LED characteristic	Description
Green constant		Power ON

PVEO Reaction Times

Reaction times

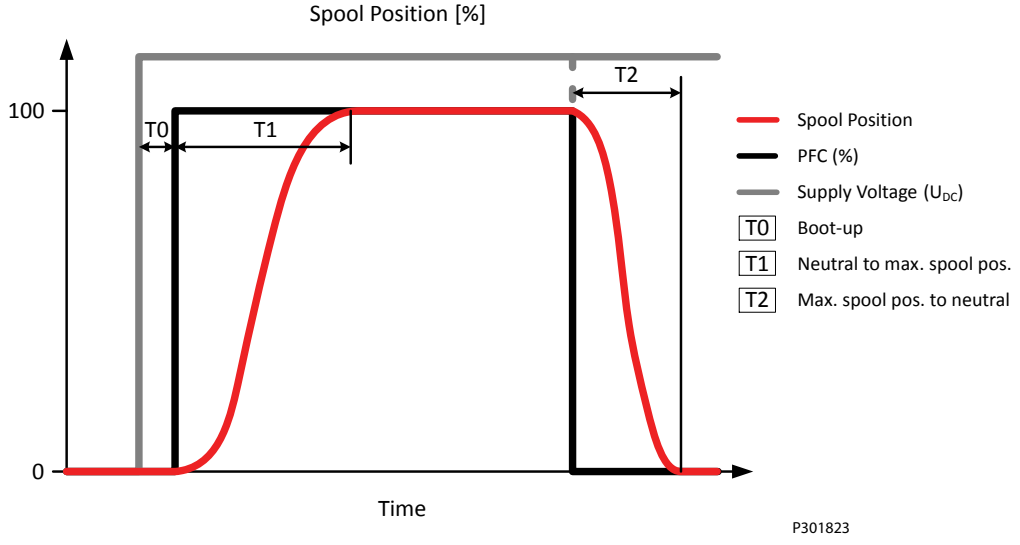

Definition of Step Response

Reaction	PVEO PVEO-DI	PVEO-R
T0 – Boot-up	0	0
T1 – Neutral to max. spool stroke @ Power ON/ @ Constant U_{DC}	110 ms	300 ms
T2 – Max. spool stroke to neutral @ Power OFF/@ Constant U_{DC}	110 ms	110 ms

PVEO

The stated values are preliminary values and can be subject to change once an increased statistical basis is achieved.

PVEO Variants for PVG

PVG 32/100 Variants

Part number	Type	*Connector*	IP	Udc	Functionality
11166843	PVEO	1x4 DEU	67	12 Vdc	Standard
11166838	PVEO	1x4 DEU	67	24 Vdc	Standard
11166866	PVEO	1x4 AMP	66	12 Vdc	Standard
11166837	PVEO	1x4 AMP	66	24 Vdc	Standard
11166836	PVEO	1x4 DIN	65	12 Vdc	Standard
11166743	PVEO	1x4 DIN	65	24 Vdc	Standard
11166753	PVEO-R	1x4 DEU	67	12 Vdc	Ramp
11166754	PVEO-R	1x4 DEU	67	24 Vdc	Ramp
11166867	PVEO-R	1x4 AMP	66	12 Vdc	Ramp
11166776	PVEO-R	1x4 AMP	66	24 Vdc	Ramp
11166831	PVEO-R	1x4 DIN	65	12 Vdc	Ramp
11166908	PVEO-R	1x4 DIN	65	24 Vdc	Ramp
11168740[1]	PVEO-DI	2x4 AMP	66	12 Vdc	Standard
11166869[1]	PVEO-DI	2x4 AMP	66	24 Vdc	Standard

[1] Includes *Direction Indication* special feature

PVG 120 Variants

Part number	Type	*Connector*	IP	Udc	Functionality
11166755	PVEO	1x4 DEU	67	12 Vdc	Standard
11166757	PVEO	1x4 DEU	67	24 Vdc	Standard
11166815	PVEO	1x4 AMP	66	12 Vdc	Standard
11166816	PVEO	1x4 AMP	66	24 Vdc	Standard
11166822	PVEO	1x4 DIN	65	12 Vdc	Standard
11166744	PVEO	1x4 DIN	65	24 Vdc	Standard
11166882	PVEO-R	1x4 AMP	66	24 Vdc	Ramp
11166909	PVEO-R	1x4 DIN	65	24 Vdc	Ramp

PVG 128/256 Variants

Part number	Type	*Connector*	IP	Udc	Functionality
11186328	PVEO	1x4 DEU	67	12 Vdc	Standard
11186330	PVEO	1x4 DEU	67	24 Vdc	Standard
11186331	PVEO	1x4 DIN	65	12 Vdc	Standard
11186342	PVEO	1x4 DIN	65	24 Vdc	Standard

PVG 60 Variants

Part number	Type	*Connector*	IP	Udc	Functionality
11166939	PVEO	1x4 DIN	65	12 Vdc	Standard
11166940	PVEO	1x4 DIN	65	24 Vdc	Standard

PVEO-HP

The PVEO-HP actuator is a non-proportional ON/OFF control actuator with open-loop spool control primarily used to control simple ON/OFF work functions where a proportional control of speed or oil flow is not a requirement.

PVEO-HP

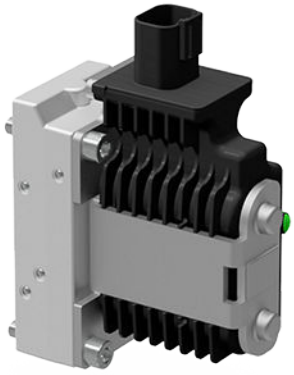

All variants are available with following features:

- Neutral position or max. spool stroke according to control signal
- 12 V_{DC} or 24 V_{DC} supply voltage
- DEUTSCH, AMP or DIN/Hirschman connectors
- PVH/PVHC pilot oil pressure of 25 bar [362.6 psi]
- LED only indicating Power ON or Power OFF

PVEO-HP functionality diagram

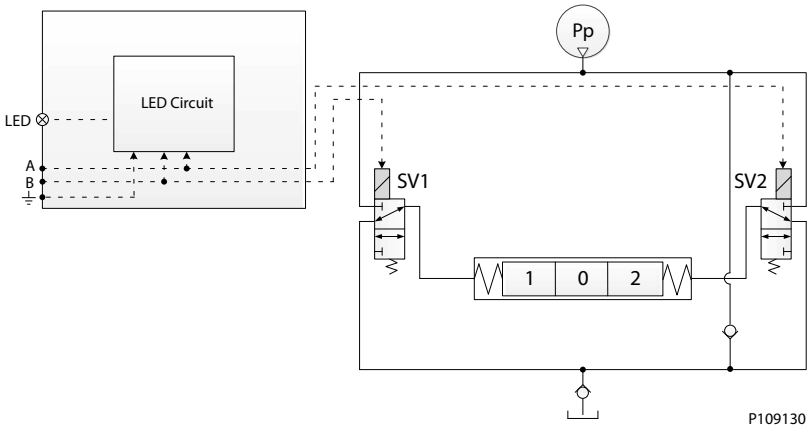

The standard PVEO/PVEO-HP functionality includes the simplest electric circuit of the PVE actuator program, using a fixed 12 V_{DC} or 24 V_{DC} supply voltage or signal voltage and a simple LED circuit to control the LED light indicating Power ON/OFF.

An energization of solenoid valve SV1 and a simultaneous de-energization of SV2 will cause the main spool to move to the right direction and vice versa. If both SV1 and SV2 are energized or de-energized simultaneously, the main spool stays locked in its neutral position.

PVEO-HP

PVEO-HP Schematics and Dimensions

Schematics

PVEO-HP
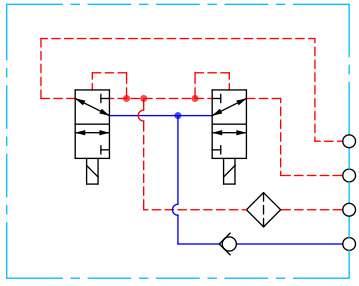 P109195

Dimensions

PVEO-HP	Connector height
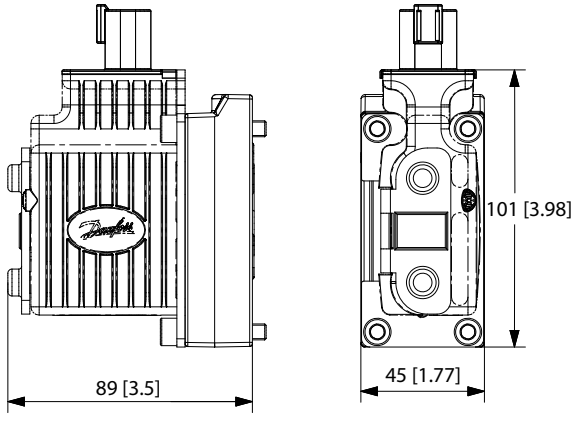 P109231	DEU = 30 mm [1.2 in] AMP = 38 mm [1.5 in] DIN = 40 mm [1.6 in]

For more information on dimensions, please see *Dimension Overview*.

PVEO-HP Technical Data

Control Specification

Description	Type	12 V_{DC}	24 V_{DC}
Supply Voltage (U_{DC})	Range	11 to 15 V_{DC}	22 to 30 V_{DC}
	Max. ripple	5%	
Current Consumption	Typical	750 mA	380 mA
	Minimum	660 mA	340 mA
	Maximum	1460 mA	740 mA

PVEO-HP

Technical data

Pilot pressure	Nominal	25 bar [363 psi]
	Minimum	21 bar [305 psi]
	Maximum	25 bar [363 psi]
Fluid consumption	Neutral	0 l/min [0 US gal/min]
	Locked position	0 l/min [0 US gal/min]
	Actuating	0.9 l/min [0.24 US gal/min]

Technical specification

Parameter	Minimum	Recommended range	Maximum
Fluid viscosity	4 mm^2/s [39 SUS]	12 to 75 mm^2/s [65 to 347 SUS]	460 mm^2/s [2128 SUS]
Fluid cleanliness	18/16/13 (according to ISO 4406)		
Storage temperature	Ambient: -50 to 90°C [-58 to 194°F]		
Operating temperature	Ambient: -30 to 60°C [-22 to 140°F]		

LED characteristic

Color	LED characteristic	Description
Green constant		Power ON

PVEO-HP Reaction Times

Reaction times

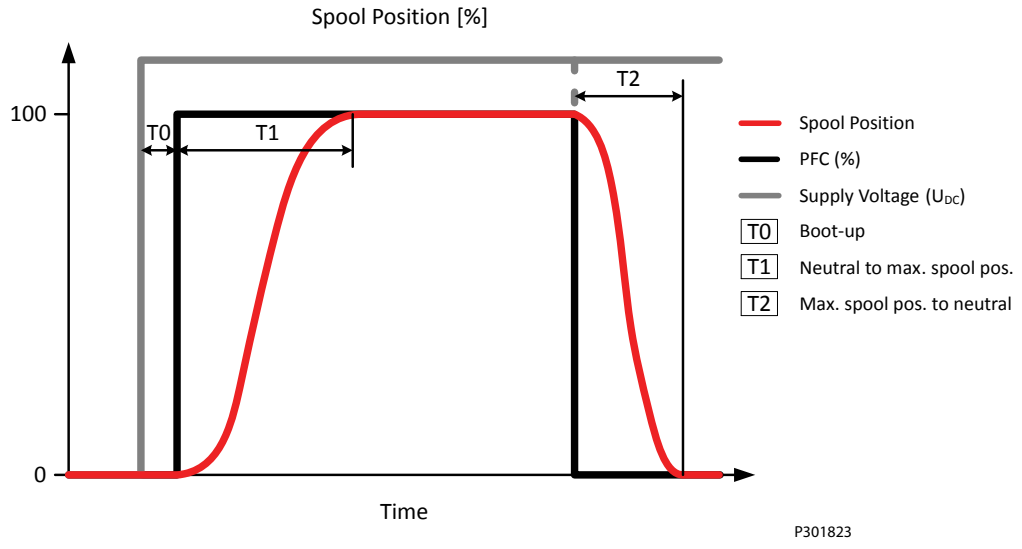

Definition of Step Response

Reaction	PVEO-HP
T0 – Boot-up	0
T1 – Neutral to max. spool stroke @ Power ON/@ Constant U_{DC}	90 ms
T2 – Max. spool stroke to neutral @ Power OFF/@ Constant U_{DC}	70 ms

The stated values are preliminary values and can be subject to change once an increased statistical basis is achieved.

PVEO-HP

PVEO-HP Variants for PVG

PVG 32/100 variants

Part number	Type	*Connector*	IP	Udc	Functionality
11166765	PVEO-HP	1x4 DEU	67	12 Vdc	Standard
11166766	PVEO-HP	1x4 DEU	67	24 Vdc	Standard
11166763	PVEO-HP	1x4 AMP	66	12 Vdc	Standard
11187524	PVEO-HP	1x4 AMP	66	24 Vdc	Standard
11187551	PVEO-HP	1x4 DIN	65	12 Vdc	Standard
11187562	PVEO-HP	1x4 DIN	65	24 Vdc	Standard

PVEM

The PVEM actuator is a proportional control actuator with closed-loop spool control primarily used to control work functions with medium performance requirements. The PVEM is available in three different performance variants, the standard PVEM, the PVEM-R with ramp and the PVEM-Q with quick reaction.

PVEM

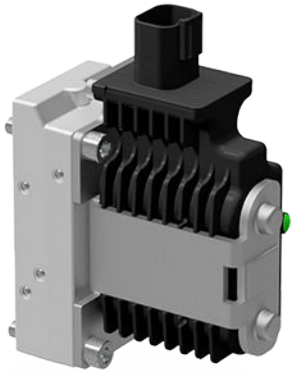

Variants are available with following features:

- 9–32 V_{DC} multi-voltage power supply
- Analog voltage control signal 25–75% of supply voltage
- DIN or Hirschman connectors
- Standard PVE pilot oil pressure of 13.5 bar [196 psi]
- LED indicating error state and passive fault monitoring
- Float (-F), quick Ramp (-R) or Quick reaction functionality (-Q)

PVEM functionality

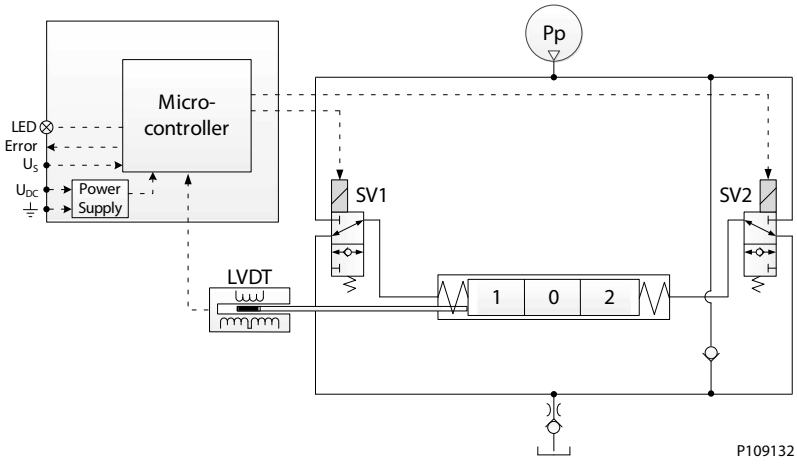

The PVE functionality includes an electric circuit with a closed-loop logic. An embedded micro-controller processes the signal voltage and the LVDT feedback signal and regulates the solenoid valves accordingly.

An energization of solenoid valve SV1 and a simultaneous de-energization of SV2 will cause the main spool to move to the right direction and vice versa. If both SV1 and SV2 are energized or de-energized simultaneously, the main spool stays locked in its neutral position.

PVEM

PVEM Schematics and Dimensions

Schematics

PVEM/PVEM-FLB/PVEM-R	PVEM-Q
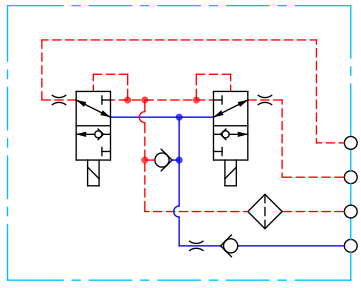 P109196	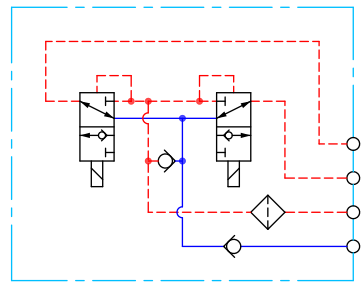 P109201

Dimensions

PVEM	Connector height
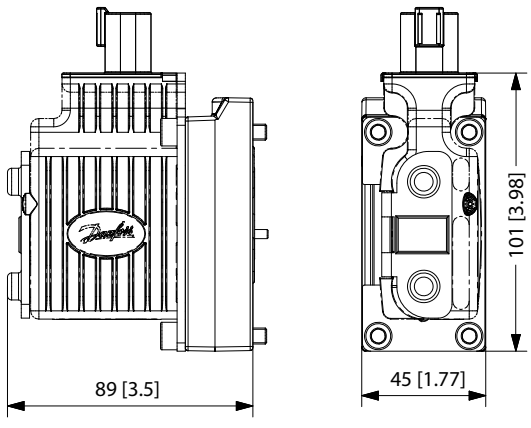 P109232	DEU = 30 mm [1.2 in] AMP = 38 mm [1.5 in] DIN = 40 mm [1.6 in]

For more information on dimensions, please see *Dimension Overview*.

PVEM Technical Data

Control Specification

Description	Type	Value
Supply Voltage (U_{DC})	Rated Range	11 to 32 V_{DC}
	Max. ripple	5%
Signal Voltage PWM (U_S)	Neutral	$U_S = 0.5\ U_{DC} = 50\%$ DUT
	Q: P to A	$U_S = (0.5 \text{ to } 0.25)\ U_{DC} = 50\%$ to 25% DUT
	Q: P to B	$U_S = (0.5 \text{ to } 0.75)\ U_{DC} = 50\%$ to 75% DUT
Input Impedance	Rated	12 kΩ
Input Capacitance	Rated	100 nF

PVEM

Current consumption

Description	@ 12 V_{DC}	@ 24 V_{DC}
PWM Frequency (U_S) recommended	> 200 Hz	> 200 Hz
Current Consumption	690 mA	350 mA

Pilot pressure

Minimum	Nominal	Maximum
10.0 bar [145 psi]	13.5 bar [196 psi]	15.0 bar [218 psi]

Fluid consumption

Neutral/Locked position	Actuating (PVEM-R)	Actuating (PVEM-Q)	Actuating
0 l/min	0.3 l/min	1.0 l/min [0.26 US gal/min][0.08 US gal/min]	0.5 l/min [0.13 US gal/min]

Technical specification

Parameter	Minimum	Recommended range	Maximum
Fluid viscosity	4 mm^2/s [39 SUS]	12 to 75 mm^2/s [65 to 347 SUS]	460 mm^2/s [2128 SUS]
Fluid cleanliness	18/16/13 (according to ISO 4406)		
Storage temperature	Ambient: -50 to 90°C [-58 to 194°F]		
Operating temperature	Ambient: -30 to 60°C [-22 to 140°F]		

LED characteristic

Color	LED characteristic	Description
Green constant		No error – Actuating
Green flashing @ 1.5 Hz		Neutral – Power save
Red constant		Internal error
Red flashing @ 1.5 Hz		External or Float error

PVEM

PVEM Reaction Times

Reaction times

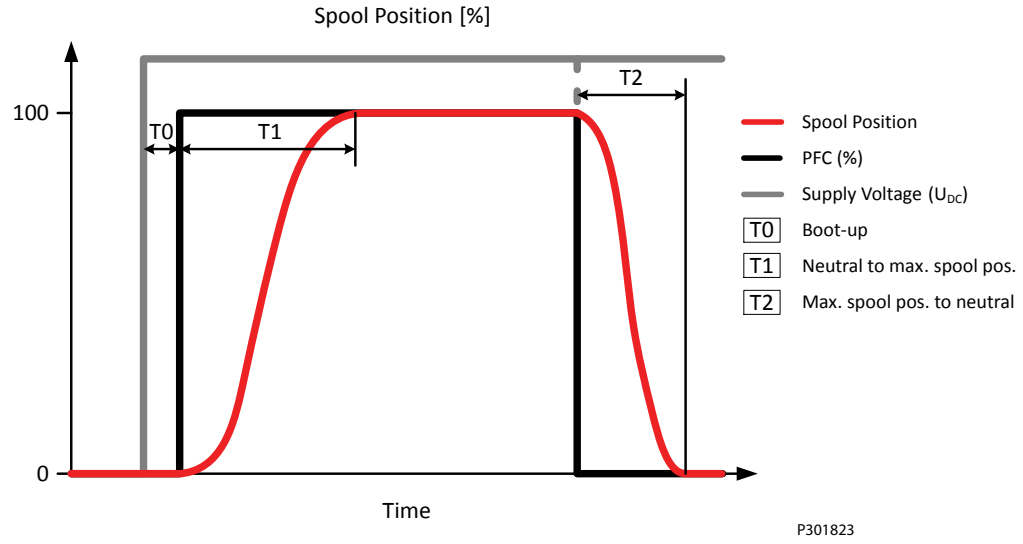

Definition of Step Response

Reaction	PVEM-R	PVEM-FLB	PVEM-Q
T0 – Boot-up	15 ms	15 ms	15 ms
T1 – Neutral to max. spool stroke @ Power ON	325 ms	225 ms	125 ms
T2 – Max. spool stroke to neutral @ Power OFF	110 ms	110 ms	110 ms
T1 – Neutral to max. spool stroke @ Constant U_{DC}	310 ms	210 ms	110 ms
T2 – Max. spool stroke to neutral @ Constant U_{DC}	90 ms	90 ms	90 ms

The stated values are preliminary values and can be subject to change once an increased statistical basis is achieved.

PVEM Hysteresis and Ripple

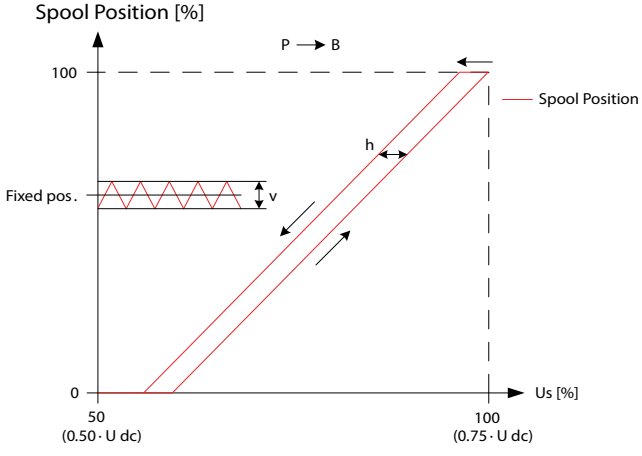

PVEM

Description	Type	PVEM
Hysteresis (h)	Rated [%]	15
Steady state ripple @ fixed US (v)	Rated [mm]	0.0

The stated values are preliminary values and can be subject to change once an increased statistical basis is achieved.

For more information on hysteresis and ripple, see *Hysteresis and Ripple*.

PVEM Variants for PVG

PVG 32/100 Variants

Part number	Type	*Connector*	IP	*Fault Monitoring*	Functionality
11166829	PVEM	1x4 DIN	65	Passive	Standard
11166852	PVEM-FLB	1x4 DIN	65	Passive	Float B-port
11166845	PVEM-R	1x4 DIN	65	Passive	Ramp
11166853	PVEM-Q	1x4 DIN	65	Passive	Quick Reaction

PVEA

The PVEA actuator is a proportional control actuator with a closed-loop spool control primarily used to control work functions with above medium performance requirements.

PVEA

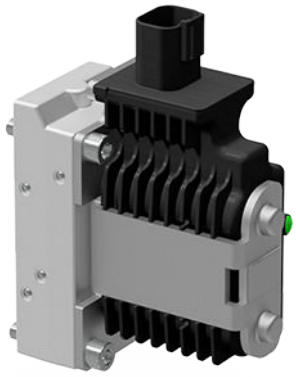

- 9–32 V_{DC} multi-voltage power supply
- Analog voltage control signal 25–75% of supply voltage
- Standard PVE pilot oil pressure of 13.5 bar [196 psi]
- DEUTSCH, AMP or DIN/Hirschman connectors
- LED indicating error state and active or passive fault monitoring
- Direction Indication output (-DI) or Neutral Power-Off (-NP) functionality

PVEA-DI functionality

PVEA-DI functionality

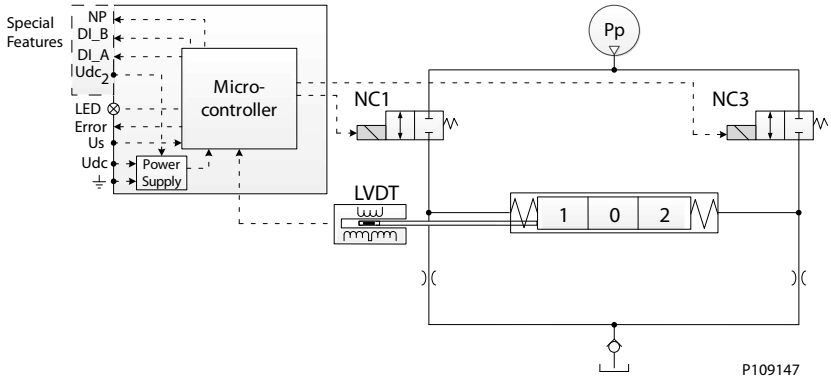

The PVE functionality includes an electric circuit with a closed-loop logic. An embedded micro-controller processes the signal voltage and the LVDT feedback signal and regulates the solenoid valves accordingly.

A continuous modulation of solenoid valve NC1 and a simultaneous de-energization of NC3 causes the main spool to move to the right direction and vice versa. When the main spool is stroked to the far right, a simultaneous modulation of both NC1 and NC3 balances the main spool in its stroked position. The main spool oscillates in its stroked position at a frequency corresponding to the modulation frequency. When both NC1 and NC3 are de-energized, the main spool moves back to its neutral position by means of the main spool neutral spring and the hydraulic principle.

PVEA

PVEA Schematics and Dimensions

Schematics

PVEA

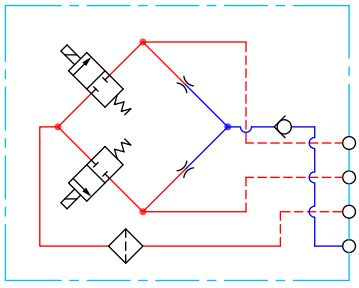

Dimensions

PVEA	Connector height
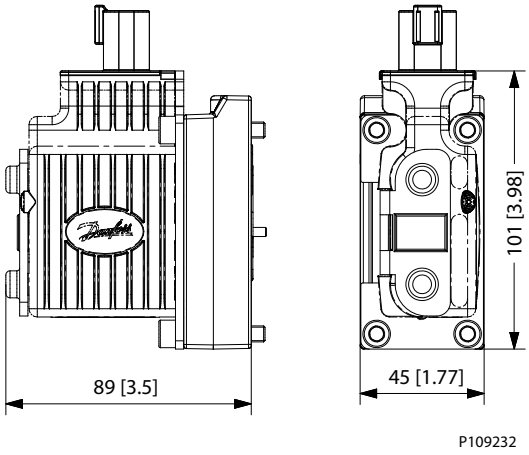	DEU = 30 mm [1.2 in]
	AMP = 38 mm [1.5 in]
	DIN = 40 mm [1.6 in]

For more information on dimensions, see *Dimension Overview*.

PVEA Technical Data

Control Specification

Description	Type	Value
Supply Voltage (U_{DC})	Rated Range	11 to 32 V_{DC}
	Max. ripple	5%
Signal Voltage PWM (U_S)	Neutral	U_S = 0.5 U_{DC} = 50% DUT
	Q: P to A	U_S = (0.5 to 0.25) U_{DC} = 50% to 25% DUT
	Q: P to B	U_S = (0.5 to 0.75) U_{DC} = 50% to 75% DUT
Input Impedance	Rated	12 kΩ
Input Capacitance	Rated	100 nF

PVEA

Current consumption

Description	@ 12 V_{DC}	@ 24 V_{DC}
PWM Frequency (U_S) recommended	> 1000 Hz	> 1000 Hz
Current Consumption	290 mA	150 mA

Pilot pressure

Minimum	Nominal	Maximum
10.0 bar [145 psi]	13.5 bar [196 psi]	15.0 bar [218 psi]

Fluid consumption

Neutral	Locked position	Actuating
0 l/min	0 l/min	1.0 l/min [0.26 US gal/min]

Technical specification

Parameter	Minimum	Recommended range	Maximum
Fluid viscosity	4 mm^2/s [39 SUS]	12 to 75 mm^2/s [65 to 347 SUS]	460 mm^2/s [2128 SUS]
Fluid cleanliness	18/16/13 (according to ISO 4406)		
Storage temperature	Ambient: -50 to 90°C [-58 to 194°F]		
Operating temperature	Ambient: -30 to 60°C [-22 to 140°F]		

LED characteristic

Color	LED characteristic	Description
Green constant		No error – Actuating
Green flashing @ 1.5 Hz		Neutral – Power save
Red constant		Internal error
Red flashing @ 1.5 Hz		External or Float error

PVEA

PVEA Reaction Times

Reaction times

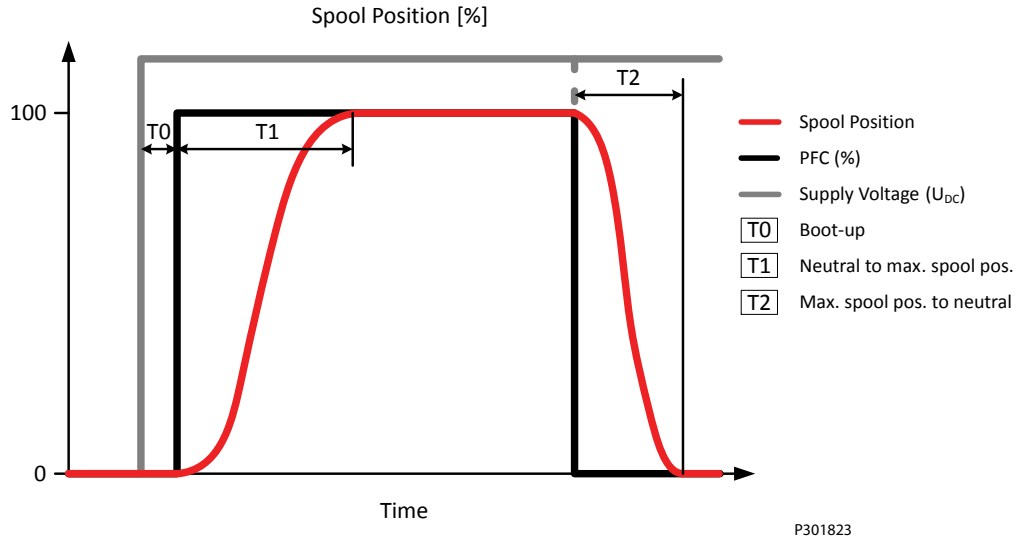

Reaction	PVEA
T0 – Boot-up [ms]	15 ms
T1 – Neutral to max. spool stroke @ Power ON	280 ms
T2 – Max. spool stroke to neutral @ Power OFF	200 ms
T1 – Neutral to max. spool stroke @ Constant U_{DC}	265 ms
T2 – Max. spool stroke to neutral @ Constant U_{DC}	200 ms

The stated values are preliminary values and can be subject to change once an increased statistical basis is achieved.

PVEA Hysteresis and Ripple

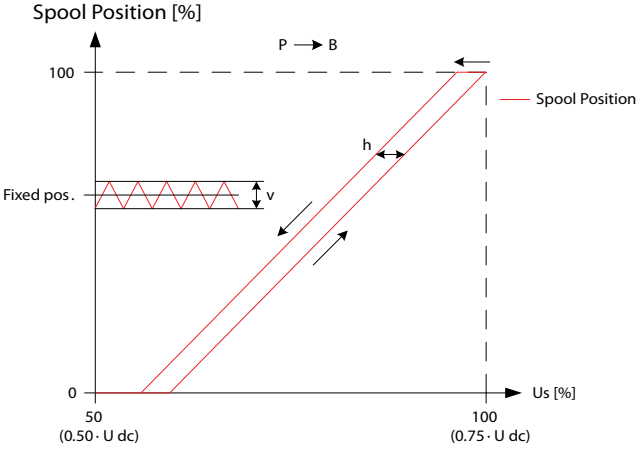

Description	Type	PVEA
Hysteresis (h)	Rated [%]	2
Steady state ripple @ fixed Us (v)	Rated [mm]	0.3

PVEA

The stated values are preliminary values and can be subject to change once an increased statistical basis is achieved.

For more information on hysteresis and ripple, see *Hysteresis and Ripple*.

PVEA Variants for PVG

PVG 32/100 Variants

Part number	Type	*Connector*	IP	*Fault monitoring*	Functionality
11177346	PVEA	1x4 DEU	67	Passive	Standard
11177347	PVEA	1x4 DEU	67	Active	Standard
11177353	PVEA	1x4 AMP	66	Passive	Standard
11177348	PVEA	1x4 AMP	66	Active	Standard
11177345[1]	PVEA-NP	1x6 DEU	67	Active	Standard
11177357[2]	PVEA-DI	2x4 DEU	67	Active	Standard
11177356[2]	PVEA-DI	2x4 AMP	66	Passive	Standard
11177355[2]	PVEA-DI	2x4 AMP	66	Active	Standard

[1] Includes *Neutral Power-OFF* special feature

[2] Includes *Direction Indication* special feature

PVEH

The PVEH actuator is a proportional control actuator with closed-loop spool control primarily used to control work functions with high performance requirements.

PVEH

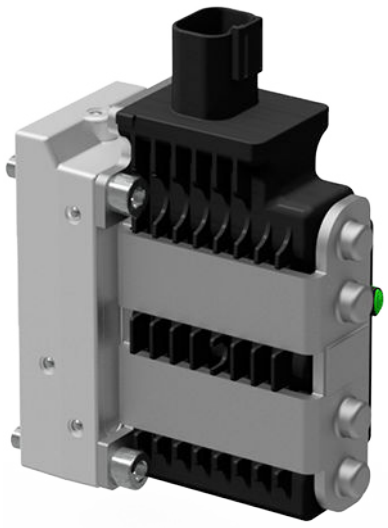

- 9–32 V_{DC} multi-voltage power supply
- Analog voltage control signal 25–75% of supply voltage
- Standard PVE pilot oil pressure of 13.5 bar [196 psi]
- DEUTSCH, AMP or DIN/Hirschman connectors
- LED indicating error state and active or passive fault monitoring
- Float (-F), Direction Indication output (-DI), Neutral Power-Off (-NP), Spool Position output (-SP) or 0-10 V_{DC} control signal (-U) functionality

PVEH functionality

PVEH functionality

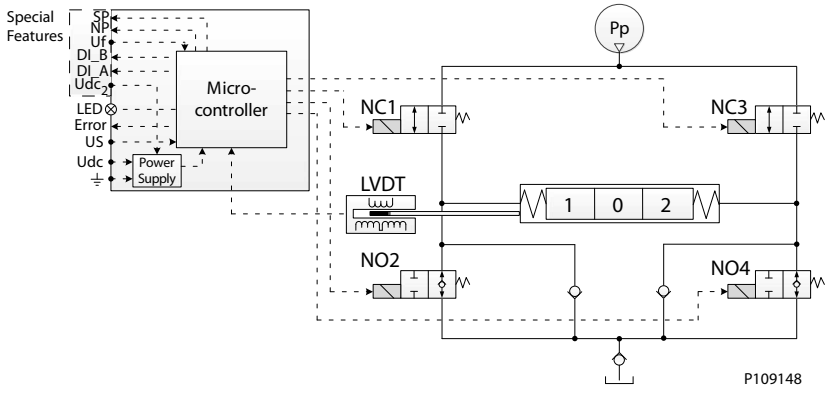

The PVE functionality includes an electric circuit with a closed-loop logic. An embedded micro-controller processes the signal voltage and the LVDT feedback signal and regulates the solenoid valves accordingly.

A continuous modulation of solenoid valves NC1 and NO4 together with a simultaneous energization of NO2 and de-energization of NC3 causes the main spool to move to the right direction and vice versa. When the main spool is stroked to the far right, a simultaneous energization of both NO2 and NO4 and de-energization of both NC1 and NC3 balances the main spool in its stroked position. An emergency stop activated when the spool is stroked will cause all solenoid valves to de-energize causing the main spool

PVEH

to move back to its neutral position by means of the main spool neutral spring and the hydraulic principle.

PVEH Schematics and Dimensions

Schematics

PVEH

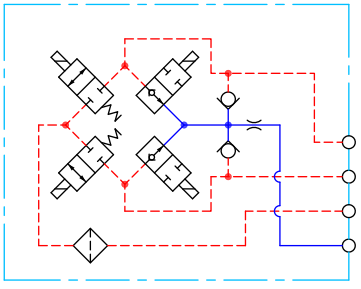

Dimensions

PVEH	Connector height
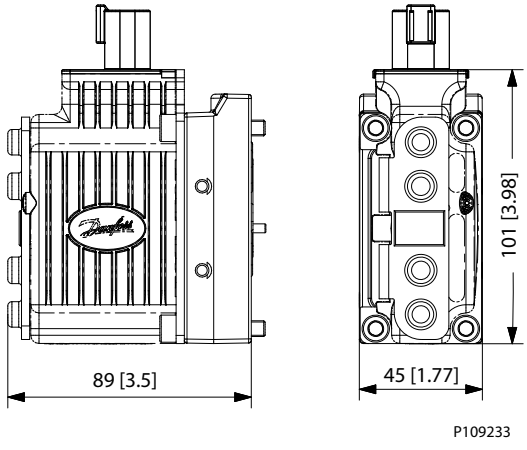	DEU = 30 mm [1.2 in] DIN = 40 mm [1.6 in]

PVEH Technical Data

Control Specification

Description	Type	Value
Supply Voltage (U_{DC})	Rated Range	11 to 32 V_{DC}
	Max. ripple	5%
Signal Voltage PWM (U_S)	Neutral	U_S = 0.5 U_{DC} = 50% DUT
	Q: P to A	U_S = (0.5 to 0.25) U_{DC} = 50% to 25% DUT
	Q: P to B	U_S = (0.5 to 0.75) U_{DC} = 50% to 75% DUT
Input Impedance	Rated	12 kΩ
Input Capacitance	Rated	100 nF

PVEH

Current consumption

Description	@ 12 V_{DC}	@ 24 V_{DC}
PWM Frequency (U_S) recommended	> 1000 Hz	> 1000 Hz
Current Consumption	540 mA	270 mA
Max. DI Current	200 mA	200 mA

Pilot pressure

Minimum	Nominal	Maximum
10.0 bar [145 psi]	13.5 bar [196 psi]	15.0 bar [218 psi]

Fluid consumption

Neutral	Locked position	Actuating
0.0 l/min	0.0 l/min	0.7 l/min [0.18 US gal/min]

Technical specification

Parameter	Minimum	Recommended range	Maximum
Fluid viscosity	4 mm^2/s [39 SUS]	12 to 75 mm^2/s [65 to 347 SUS]	460 mm^2/s [2128 SUS]
Fluid cleanliness	18/16/13 (according to ISO 4406)		
Storage temperature	Ambient: -50 to 90°C [-58 to 194°F]		
Operating temperature	Ambient: -30 to 60°C [-22 to 140°F]		

LED Characteristic

Color	LED Characteristic	Description
Green constant		No error – Actuating
Green flashing @ 1.5 Hz		Neutral – Power save
Red constant		Internal error
Red flashing @ 1.5 Hz		External or Float error
Yellow		Disable mode

PVEH

PVEH Reaction Times

Reaction times

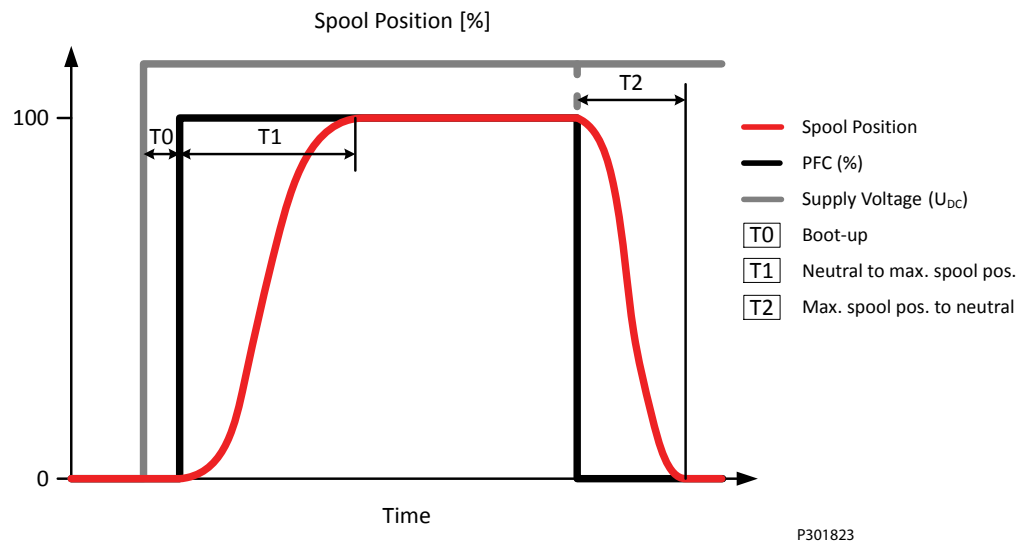

Reaction	PVEH
T0 – Boot-up [ms]	15 ms
T1 – Neutral to max. spool stroke @ Power ON [ms]	125 ms
T2 – Max. spool stroke to neutral @ Power OFF [ms]	110 ms
T1 – Neutral to max. spool stroke @ Constant U_{DC} [ms]	110 ms
T2 – Max. spool stroke to neutral @ Constant U_{DC} [ms]	90 ms

The stated values are preliminary values and can be subject to change once an increased statistical basis is achieved.

PVEH Hysteresis and Ripple

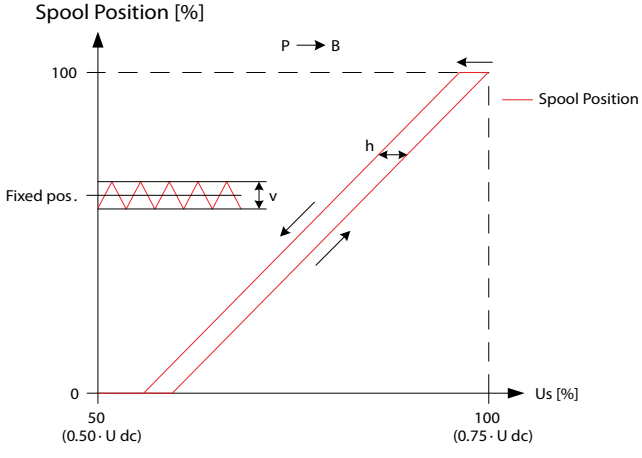

Description	Type	PVEH
Hysteresis (h)	Rated [%]	4
Steady state ripple @ fixed Us (v)	Rated [mm]	0.0

For more information on hysteresis and ripple, see *Hysteresis and Ripple*.

PVEH

PVEH Variants for PVG

PVG 32/100 variants

Part number	Type	*Connector*	IP	*Fault monitoring*	Functionality
11166732	PVEH	1x4 DEU	67	Passive	Standard
11166775	PVEH	1x4 DEU	67	Active	Standard
11166825	PVEH	1x4 AMP	66	Passive	Standard
11166818	PVEH	1x4 AMP	66	Active	Standard
11166824	PVEH	1x4 DIN	65	Passive	Standard
11166817	PVEH	1x4 DIN	65	Active	Standard
11166832[1]	PVEH-U	1x4 AMP	66	Passive	Fixed US 0-10 V dc
11166821[1]	PVEH-U	1x4 AMP	66	Active	Fixed US 0-10 V dc
11166770[1]	PVEH-U	1x4 DIN	65	Passive	Fixed US 0-10 V dc
11166772[1]	PVEH-U	1x4 DIN	65	Active	Fixed US 0-10 V dc
11166840	PVEH-FLB	1x4 DEU	67	Passive	Float B-port
11166742	PVEH-FLB	1x4 DEU	67	Active	Float B-port
11166839	PVEH-FLB	1x4 DIN	65	Active	Float B-port
11166841[2]	PVEH-FLA	1x6 DEU	67	Active	Float A-port
11168738[2]	PVEH-FLA	1x6 AMP	66	Passive	Float A-port
11168739[2]	PVEH-FLA	1x6 AMP	66	Active	Float A-port
11166773[3]	PVEH-SP	1x6 DEU	67	Active	Standard
11166750[4]	PVEH-NP	1x6 DEU	67	Fast active	Standard
11166835[5]	PVEH-DI	2x4 DEU	67	Active	Standard
11166820[5]	PVEH-DI	2x4 AMP	66	Passive	Standard
11166819[5]	PVEH-DI	2x4 AMP	66	Active	Standard

[1] Includes *Disable Mode* special feature

[2] Includes *Dedicated Float Pin (UF)* special feature

[3] Includes *Spool Position* special feature

[4] Includes *Neutral Power-Off* special feature

[5] Includes *Direction Indication* special feature

PVG 120 variants

Part number	Type	*Connector*	IP	*Fault monitoring*	Functionality
11166760	PVEH	1x4 DEU	67	Passive	Standard
11166814	PVEH	1x4 AMP	66	Passive	Standard
11166801	PVEH	1x4 AMP	66	Active	Standard
11166813	PVEH	1x4 DIN	65	Passive	Standard
11166777	PVEH	1x4 DIN	65	Active	Standard
11166771[1]	PVEH-U	1x4 DIN	65	Passive	Fixed US 0-10 V dc
11166767[1]	PVEH-U	1x4 DIN	65	Active	Fixed US 0-10 V dc

[1] Includes *Disable Mode* special feature

PVEH

PVG 128/256 variants

Part number	Type	*Connector*	IP	*Fault monitoring*	Functionality
11186325	PVEH	1x4 DEU	67	Passive	Standard
11186326	PVEH	1x4 DEU	67	Active	Standard
11186321	PVEH	1x4 DIN	65	Passive	Standard
11186322	PVEH	1x4 DIN	65	Active	Standard
11186323[1]	PVEH-U	1x4 DIN	65	Passive	Fixed US 0-10 Vdc
11186324[1]	PVEH-U	1x4 DIN	65	Active	Fixed US 0-10 Vdc

[1] Includes *Disable Mode* special feature

PVG 60 variants

Part number	Type	*Connector*	IP	*Fault monitoring*	Functionality
11166910	PVEH	1x4 DIN	65	Active	Float B-port

PVES

The PVES actuator is a proportional control actuator with closed-loop spool control primarily used to control work functions with very high performance requirements.

PVES

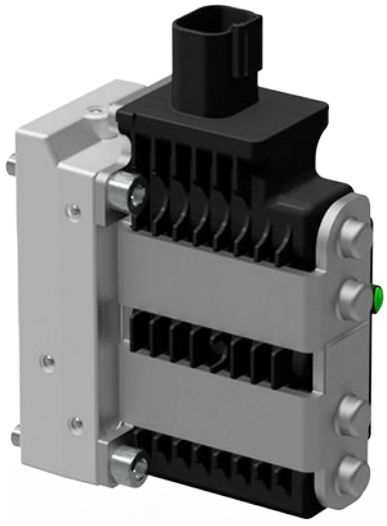

- 9–32 V_{DC} multi-voltage power supply
- Analog voltage control signal 25–75% of supply voltage
- Standard PVE pilot oil pressure of 13.5 bar [196 psi]
- DEUTSCH, AMP or DIN/Hirschman connectors
- LED indicating error state and active or passive fault monitoring
- Spool Position output (-SP) or 0-10 V_{DC} control signal (-U) functionality

PVES functionality

PVES functionality

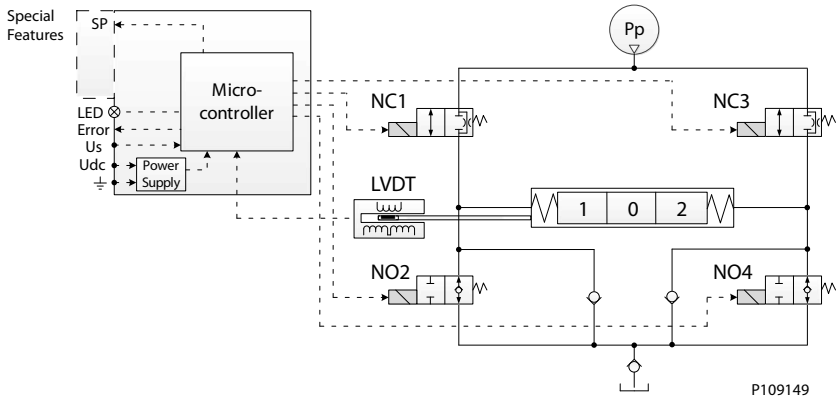

The PVE functionality includes an electric circuit with a closed-loop logic. An embedded micro-controller processes the signal voltage and the LVDT feedback signal and regulates the solenoid valves accordingly.

A continuous modulation of solenoid valves NC1 and NO4 together with a simultaneous energization of NO2 and de-energization of NC3 causes the main spool to move to the right direction and vice versa. When the main spool is stroked to the far right, a simultaneous energization of both NO2 and NO4 and de-energization of both NC1 and NC3 balances the main spool in its stroked position. An emergency stop activated when the spool is stroked will cause all solenoid valves to de-energize causing the main spool

PVES

to move back to its neutral position by means of the main spool neutral spring and the hydraulic principle.

PVES Schematics and Dimensions

Schematic

PVES
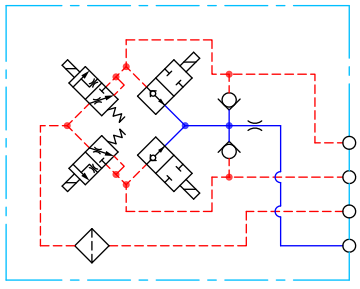 P109199

Dimensions

PVES	Connector height
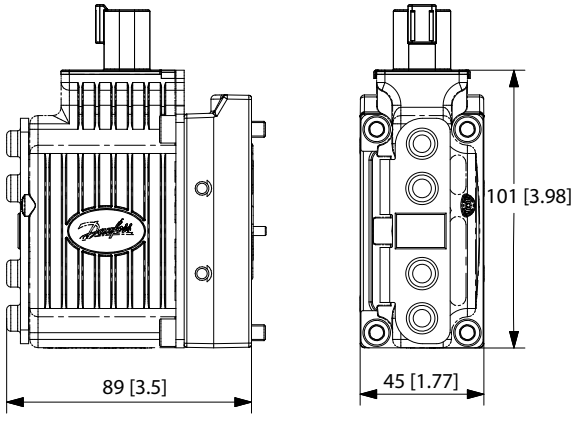 P109235	DEU = 30 mm [1.2 in]
	AMP = 38 mm [1.5 in]
	DIN = 40 mm [1.6 in]

For information on dimensions, see *Dimension Overview*.

PVES Technical Data

Control Specification

Description	Type	Value
Supply Voltage (U_{DC})	Rated Range	11 to 32 V_{DC}
	Max. ripple	5%
Signal Voltage PWM (U_S)	Neutral	U_S = 0.5 U_{DC} = 50% DUT
	Q: P to A	U_S = (0.5 to 0.25) U_{DC} = 50% to 25% DUT
	Q: P to B	U_S = (0.5 to 0.75) U_{DC} = 50% to 75% DUT

PVES

Control Specification (continued)

Description	Type	Value
Input Impedance	Rated	12 kΩ
Input Capacitance	Rated	100 nF

Current consumption

Description	@ 12 V_{DC}	@ 24 V_{DC}
PWM Frequency (U_S) recommended	> 1000 Hz	> 1000 Hz
Current Consumption	560 mA	280 mA

Pilot pressure

Minimum	Nominal	Maximum
10.0 bar [145 psi]	13.5 bar [196 psi]	15.0 bar [218 psi]

Fluid consumption

Neutral	Locked position	Actuating
0.03 l/min [0.106 US gal/min]	0.01 l/min [0.026 US gal/min]	0.8 l/min [0.21 US gal/min]

Technical specification

Parameter	Minimum	Recommended range	Maximum
Fluid viscosity	4 mm^2/s [39 SUS]	12 to 75 mm^2/s [65 to 347 SUS]	460 mm^2/s [2128 SUS]
Fluid cleanliness	18/16/13 (according to ISO 4406)		
Storage temperature	Ambient: -50 to 90°C [-58 to 194°F]		
Operating temperature	Ambient: -30 to 60°C [-22 to 140°F]		

LED Characteristic

Color	LED Characteristic	Description
Green constant		No error – Actuating
Green flashing @ 1.5 Hz		Neutral – Power save
Red constant		Internal error
Red flashing @ 1.5 Hz		External or Float error
Yellow		Disable mode

PVES

PVES Reaction Times

Reaction times

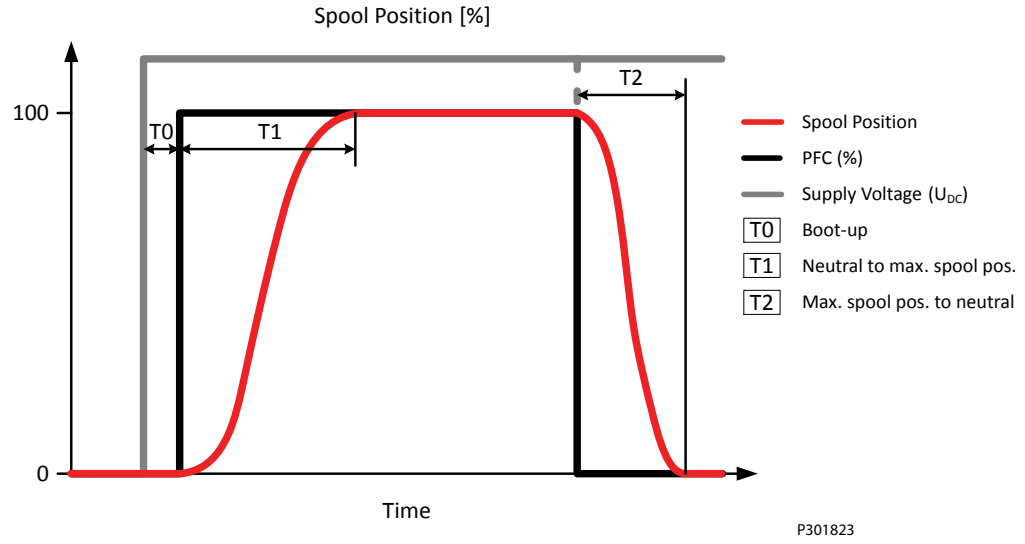

Reaction	PVES
T0 – Boot-up [ms]	15 ms
T1 – Neutral to max. spool stroke @ Power ON	125 ms
T2 – Max. spool stroke to neutral @ Power OFF	110 ms
T1 – Neutral to max. spool stroke @ Constant U_{DC}	110 ms
T2 – Max. spool stroke to neutral @ Constant U_{DC}	90 ms

The stated values are preliminary values and can be subject to change once an increased statistical basis is achieved.

PVES Hysteresis and Ripple

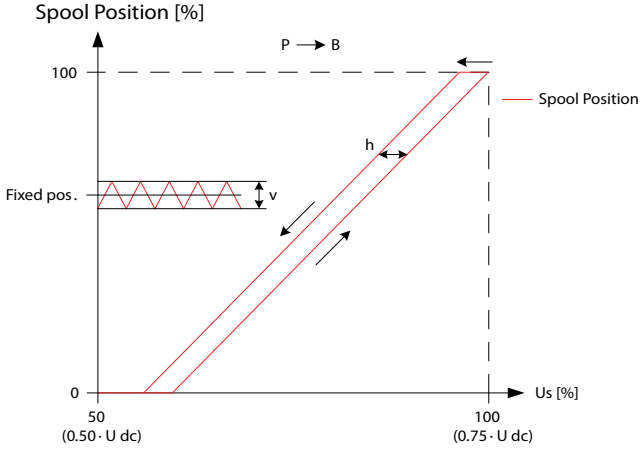

Description	Type	PVES
Hysteresis (h)	Rated [%]	<0.5
Steady state ripple @ fixed US (v)	Rated [mm]	0.2

PVES

The stated values are preliminary values and can be subject to change once an increased statistical basis is achieved.

For more information on hysteresis and ripple, see *Hysteresis and Ripple*.

PVES Variants for PVG

PVG 32/100 variants

Part number	Type	*Connector*	IP	*Fault monitoring*	Functionality
11166748	PVES	1x4 DEU	67	Passive	Standard
11166864	PVES	1x4 DEU	67	Active	Standard
11166859	PVES	1x4 AMP	66	Passive	Standard
11166858	PVES	1x4 AMP	66	Active	Standard
11166849	PVES	1x4 DIN	65	Passive	Standard
11166857	PVES	1x4 DIN	65	Active	Standard
11166745[1]	PVES-U	1x4 DEU	67	Passive	Fixed Us 0-10 Vdc
11166747[1]	PVES-U	1x4 AMP	66	Active	Fixed Us 0-10 Vdc
11166752[2]	PVES-SP	1x6 DEU	67	Passive	Standard

[1] Includes *Disable Mode* special feature

[2] Includes *Spool Position* special feature

PVG 120 variants

Part number	Type	*Connector*	IP	*Fault monitoring*	Functionality
11166761	PVES	1x4 DEU	67	Passive	Standard
11166762	PVES	1x4 DIN	65	Passive	Standard

Connector Overview

Connector Overview

1 x 4 DEUTSCH	2 x 4 DEUTSCH	1 x 6 DEUTSCH
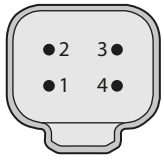	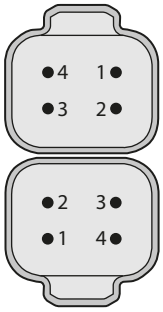	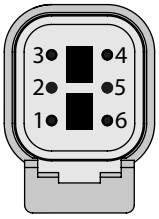

1 x 4 AMP	2 x 4 AMP	1 x 6 AMP	1 x 4 DIN
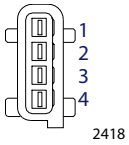	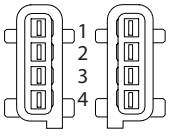	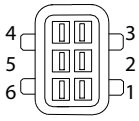	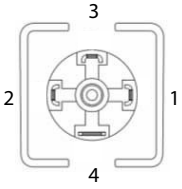

PVEO-DI 4-pin AMP Connector

Pinout	Pin 1	Pin 2	Pin 3	Pin 4
2x4 AMP (A)	U_{DC}_A	U_{DC}_B	GND	GND
2x4 AMP (B)	DI-B	DI-A	GND	U_{DC2}

PVEM 4-pin DIN Connector

Pinout	Pin 1	Pin 2	Pin 3	Pin 4
1x4 DIN	U_{DC}	U_S	Error	GND

PVEO, PVEO-R and PVEO-HP 4-pin Connector

Pinout	Pin 1	Pin 2	Pin 3	Pin 4
1x4 AMP	U_{DC}_A	U_{DC}_B	GND	GND
1x4 DEUTSCH	U_{DC}_A	GND	GND	U_{DC}_B
1x4 DIN	U_{DC}_A	U_{DC}_B	-	GND

PVEA/PVEH/PVES

Pinout	Pin 1	Pin 2	Pin 3	Pin 4
1x4 AMP	U_S	U_{DC}	GND	Error
1x4 DEUTSCH	U_S	Error	GND	U_{DC}
1x4 DIN	U_{DC}	U_S	Error	GND

PVEA-DI and PVEH-DI 4-pin Connector

Pinout	Pin 1	Pin 2	Pin 3	Pin 4
2x4 AMP (A)	U_S	U_{DC}	GND	Error
2x4 AMP (B)	DI-A	DI-B	GND	U_{DC2}

Connector Overview

PVEA-DI and PVEH-DI 4-pin Connector (continued)

Pinout	Pin 1	Pin 2	Pin 3	Pin 4
2x4 DEUTSCH (A)	U_S	Error	GND	U_{DC}
2x4 DEUTSCH (B)	U_{DC2}	GND	DI-A	DI-B

PVEH-FLA 6-pin Connector

Pinout	Pin 1	Pin 2	Pin 3	Pin 4	Pin 5	Pin 6
1x6 AMP	U_S	U_{DC}	GND	Error	Float	-

PVEH-SP and PVES-SP 6-pin Connector

Pinout	Pin 1	Pin 2	Pin 3	Pin 4	Pin 5	Pin 6
1x6 DEUTSCH	U_S	Error	-	SP	GND	U_{DC}

Fault Monitoring and Fault Reaction

All proportional control PVE Series 7 actuators feature:

- Integrated fault monitoring
- Detecting spool stroke inconsistencies
- Detecting internal hardware defects
- Detecting demand signal inconsistencies
- Fault reaction depending on the type of fault monitoring
  - Generic
  - Specific

Passive and active fault monitoring refers to whether or not the actuator is reacting on the error when it is detected.

Active fault monitoring

No matter what kind of error is detected, the solenoid valves will be disabled and the operation that the valves/spool controls will stop immediately. Active fault monitoring keeps a “memory” of the error, even if it is no longer registered. The active fault monitoring does not have Auto Recovery because of this “memory” and a reboot/restart will therefore be required to reactivate the solenoid valves.

With an active fault monitoring the following scenarios will take place when an error is detected/occurs:

- The LED light will switch from green to red and the error pin output will go high
- The solenoid valves will be disabled and the operation that the valves/spool controls will stop immediately
- The active fault monitoring does not have Auto Recovery, so when the error is fixed/no longer is registered a reboot/restart of the PVE is required to reactivate it.

Passive fault monitoring

Passive fault monitoring does not disable the solenoid valves when an error is detected. It will continue to operate despite that an error was detected. When the error no longer is registered the passive fault monitoring will “forget” the error and continue as if the error was never there.

With a passive fault monitoring the following conditions will happen when an error is detected/occurs:

- The LED light will switch from green to red and the error pin output will go high
- The solenoid valves will continue operating at the set point given at the time of the error
  - Only exception is if the error is caused by the supply voltage (U_{DC}) being either above or below the allowed range or if the temperature measured on the internal electronics board is higher than allowed. In these cases, the solenoid valves will be disabled.

An overview of the error states and the reaction to the errors can be seen in the table *Fault Reaction Overview*.

Generic Fault Reaction

All PVE actuators with fault monitoring are triggered by the following main events:

Control Signal Monitoring	The Control signal voltage (U_S) is continuously monitored. The permissible range is between 15% and 85% of the supply voltage (U_{DC}). Outside this range the PVE will switch into an error state. A disconnected U_S pin (floating) is recognized as a neutral set point.
Transducer/LVDT Supervision	The internal LVDT wires are monitored. If the signals are interrupted or short-circuited, the PVE will switch into an error state.

Fault Monitoring and Fault Reaction

Supervision of Spool Position	The actual position must always correspond to the demanded position (U_S). If the actual spool position is further out from neutral than the demanded spool position or in opposite direction, the PVE will switch into an error state. Spool position closer to neutral and in same direction will not cause an error state – the situation is considered *in control.*
Float Position Monitoring	Float position must be entered or left within a time limit. A too high delay on the 1x6 pin float PVE will cause an error state – this is relevant for the 1x6 pin PVEH-F actuators only.
Temperature Monitoring	When the temperature is too high the PVE LED will light constant red and solenoid valves will be disabled.

Fault Reaction Overview

All entries have an Auto Recovery feature unless marked otherwise.

Description	Monitoring	LED	Solenoid valves	Error pin output	Fault reaction time	
					PVEM/H/S	PVEA
Spool not at setpoint	Active*		Disabled	High	500	750
	Passive		-	High	250	750
Unable to reach float position	Active*		Disabled	High	1000	1000
	Passive		-	High	1000	1000
U dc > max.	Active		Disabled	-	-	-
	Passive		Disabled	-	-	-
U dc < min.	Active	————	Disabled	-	-	-
	Passive	————	Disabled	-	-	-
Us out of range	Active*		Disabled	High	500	750
	Passive		-	High	250	750
LVDT error	Active*		Disabled	High	500	750
	Passive		-	High	250	750
Temp > max.	Active*		Disabled	High	250	750
	Passive		Disabled	High	250	750

* Does not have Auto Recovery

Error Pin Specification

All proportional control PVE Series 7 actuators feature an error pin, indicating when an error is detected/ occurs, according to the Fault Reaction Overview table. The specifications of the error pin is shown below.

Description	No error	Error
Output state	Low	High
Output voltage	<2 Vdc	~Udc
Output current	Max. 100 mA	

Functionality Overview

Standard and Fixed US 0-10 Vdc

All standard proportional actuator variants (PVEM/PVEA/PVEH/PVES) can be controlled by an analog signal voltage (Us) or a PWM controlled signal voltage (Us) proportional to the supply voltage (Udc).

PVEO

Description	Type	Value	
Supply voltage (Udc)	Rated	12 Vdc	24 Vdc
	Range	11 to 15 Vdc	22 to 30 Vdc
	Max. ripple	5%	

PVEM/PVEA/PVEH/PVES

Description	Type	Value
Supply voltage (Udc)	Rated	11 to 32 Vdc
	Range	11 to 32 Vdc
	Max. ripple	5%
Signal voltage (Us)	Neutral	Us = 0.5 · Udc
	Q: P to A	US = (0.5 to 0.25) · Udc
	Q: P to B	US = (0.5 to 0.75) · Udc

The PVEH-U and PVES-U variants are controlled by a fixed 0-10 Vdc signal voltage (Us), directly compatible with standard PLC control.

PVEH-U

Description	Type	Value
Supply voltage (Udc)	Rated	11 to 32 Vdc
	Range	11 to 32 Vdc
	Max. ripple	5%
Signal voltage (Us)	Neutral	Us = 5 V
	Q: P to A	5 V to 2.5 V
	Q: P to B	5 V to 7.5 V

Functionality Overview

Performance

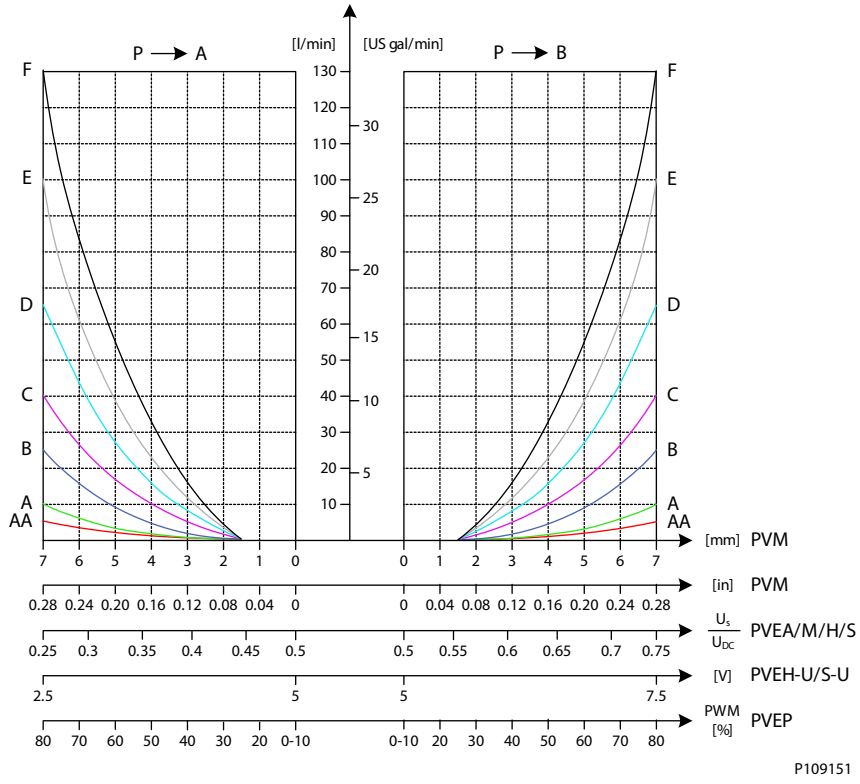

PWM Voltage Control

The PVEM/PVEA/PVEH/PVES actuator variants can be controlled by a PWM controlled signal voltage (Us) proportional to the supply voltage (Udc).

The V_1 and V_2 must be symmetrical around Udc/2 and V_1 must be equal to or less than Udc.

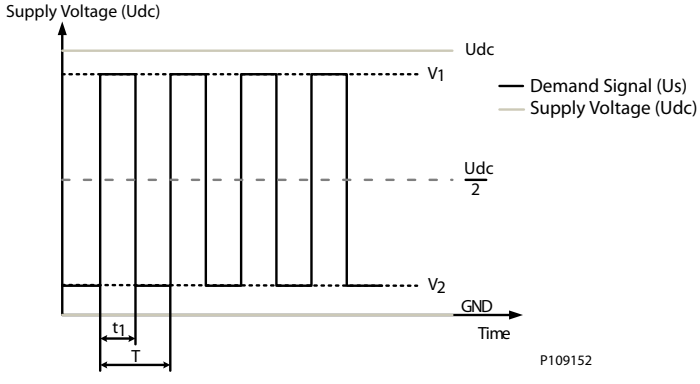

PVEM Control Specification

Description	Type	Value
Supply Voltage (Udc)	Rated	11 to 32 Vdc
	Range	11 to 32 Vdc
	Max. ripple	5%

Functionality Overview

PVEM Control Specification (continued)

Description	Type	Value
Signal Voltage PWM (Us)	Neutral	Us = 50% DUT
	Q: P to A	Us = 50% to 25% DUT
	Q: P to B	Us = 50% to 75% DUT
PWM Frequency (Us)	Recommended	> 200 Hz

PVEA/PVEH/PVES Control specification

Description	Type	Value
Supply Voltage (Udc)	Rated	11 to 32 Vdc
	Range	11 to 32 Vdc
	Max. ripple	5%
Signal Voltage PWM (Us)	Neutral	Us = 50% DUT
	Q: P to A	Us = 50% to 25% DUT
	Q: P to B	Us = 50% to 75% DUT
PWM Frequency (Us)	Recommended	> 1000 Hz

Functionality Overview

Ramp (-R)

The Ramp functionality is a rate limitation of the spool stroke, resulting in extended reaction times and in some cases a smoother control of the main spool compared to the standard PVEO variant. The Ramp functionality of a *PVEO-R* variant is achieved purely hydraulically by implementing two orifices working on both sides of the main spool (integrated in the actuator). The Ramp functionality of a *PVEM-R* variant is achieved in the regulation principle.

PVEO with ramp functionality (PVEO-R)

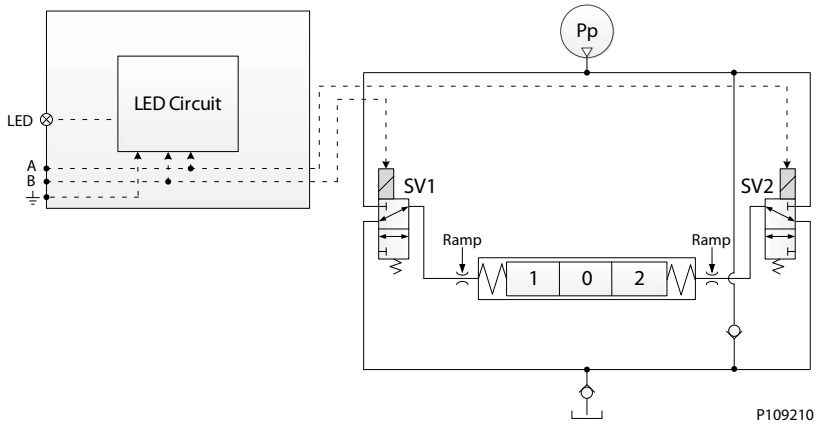

PVEM with ramp functionality (PVEM-R)

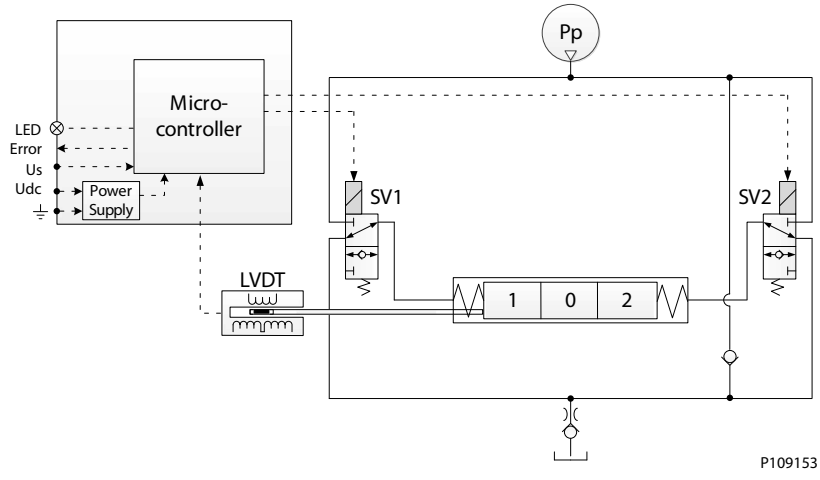

For reaction times, see *PVE S7 Reaction Times* on page 54

Functionality Overview

Quick Reaction (-Q)

The Quick Reaction functionality of the *PVEM-Q* variant results in shorter reaction times and a more rapid or aggressive control of the main spool compared to the standard PVEM variant. The Quick Reaction functionality of a PVEM-Q is achieved by replacing the combined orifice and check valve with a check valve in the connection to tank and changing the regulation principle.

PVEM with quick reaction functionality (PVEM-Q)

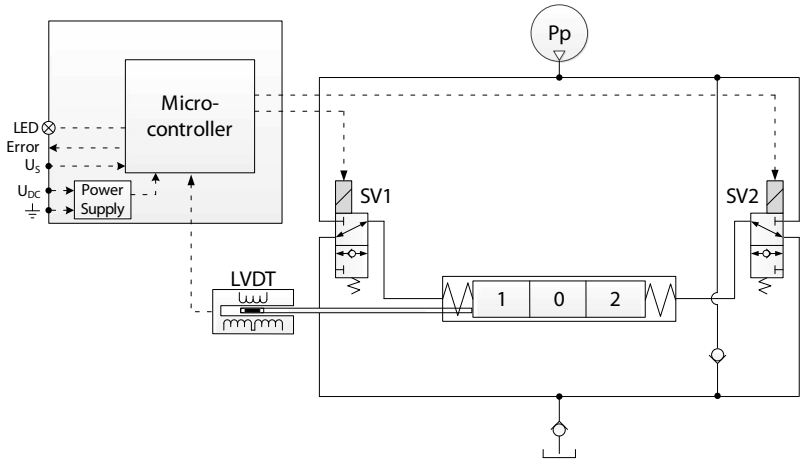

For reaction times, see *PVE S7 Reaction Times* on page 54.

Functionality Overview

Float B-Port (-FLB)

The Float B-Port functionality enables the proportional PVEM-FLB/PVEH-FLB actuator variants to enter the main spool into a float position. The PVE actuators with Float B-Port functionality is compatible with the dedicated main spools with electronic float in B-port.

PVE Type	PVBS Type	Standard FC	Float Control
PVEM-FLB (1x4 pin)	Deadband 1.5 mm Max. B-port flow 4.8 mm	Us = (0.35 → 0.65) · U_{DC}	Us = 0.75 · U_{DC}
PVEH-FLB (1x4 pin)			

Float in B-port functionality

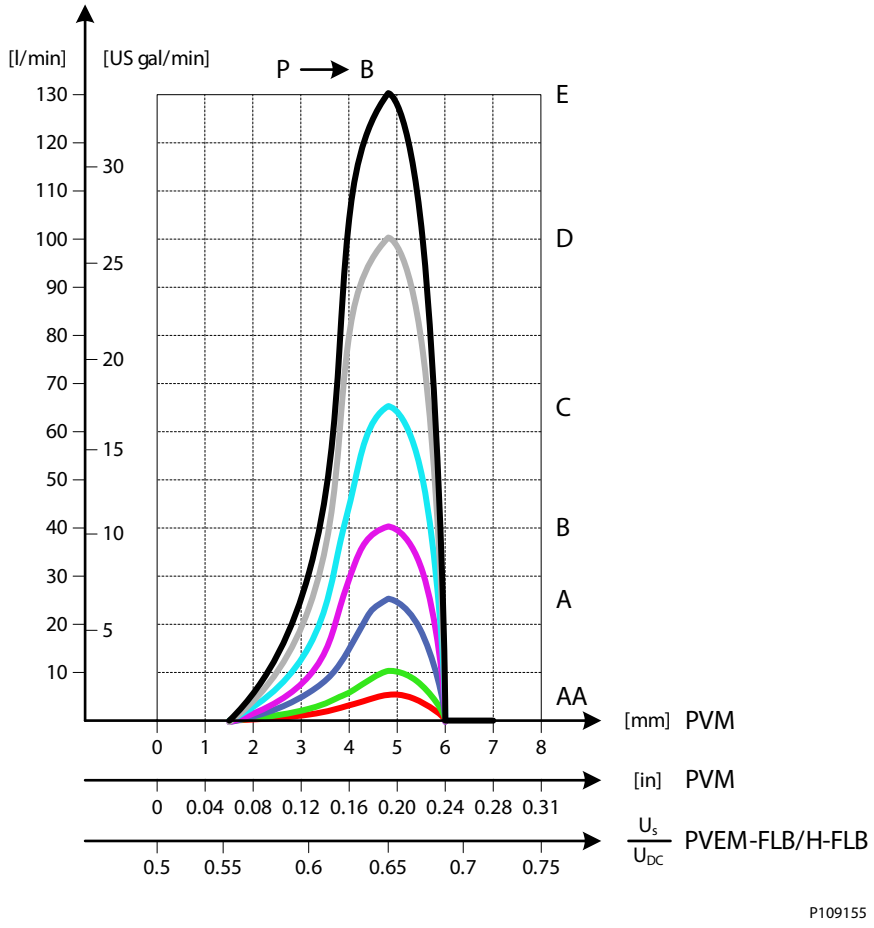

Functionality Overview

Float A-Port (-FLA)

The Float A-Port functionality enables the proportional PVEH-FLA actuator variants to enter the main spool into a float position. The PVE actuators with Float A-Port functionality is compatible with the dedicated main spools with electronic float in A-port.

PVE Type	PVBS Type	Standard Flow Control	Float Control
PVEH-FLA (1x6 pin)	Deadband 1.7 mm	Us = (0.25 → 0.75) · Udc	U dc to dedicated float pin (UF)
	Max. B-port flow 8.0 mm		

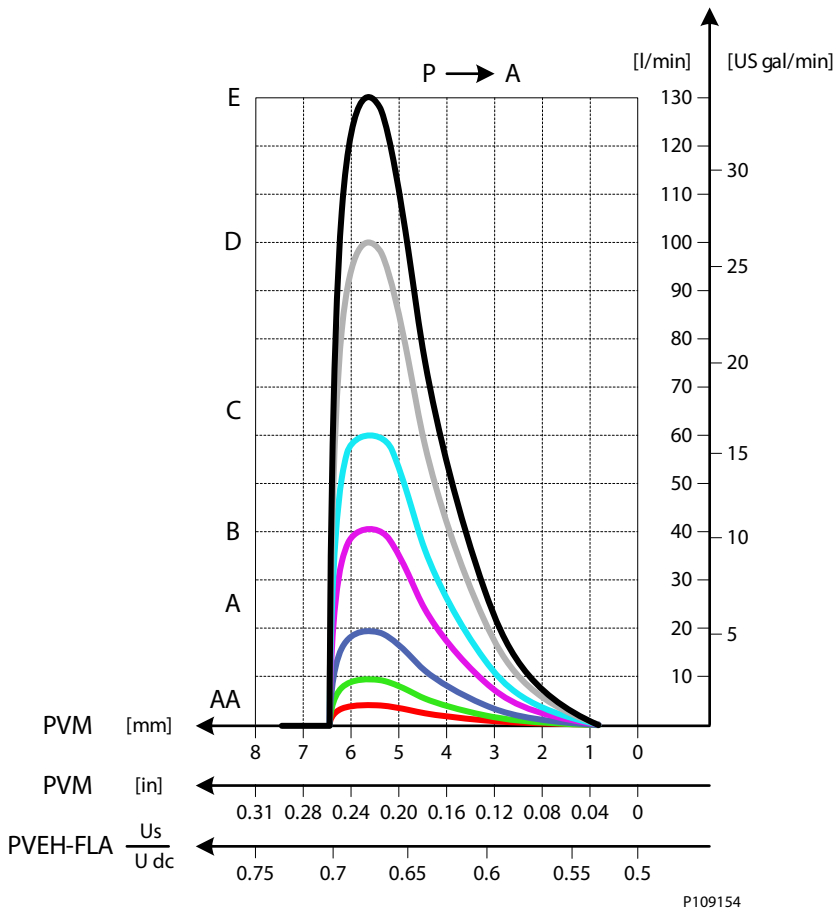

PVE Power Save

All proportional actuator variants feature a Power Save mode, de-energizing the solenoid valve bridge. The Power Save mode is entered when the signal voltage (Us) and the LVDT spool position has been in neutral for 750 ms. As soon as the signal voltage (Us) or the LVDT spool position is out of neutral the PVE will leave its Power Save mode and re-energize the solenoid valve bridge as usual.

The Power Save mode results in increased power efficiency by reducing the current consumption of the PVE actuators in neutral position. The Power Save mode has no effect on the performance of the PVE actuator.

For current consumption values, please see chapter *Current Consumption*.

Special Features

Direction Indication (-DI)

The PVEO-DI/PVEA-DI/PVEH-DI actuator variants feature an integrated Direction Indication output derived from the LVDT spool position, indicating the state of the main spool (neutral, A-port or B-port).

PVEO-DI functionality

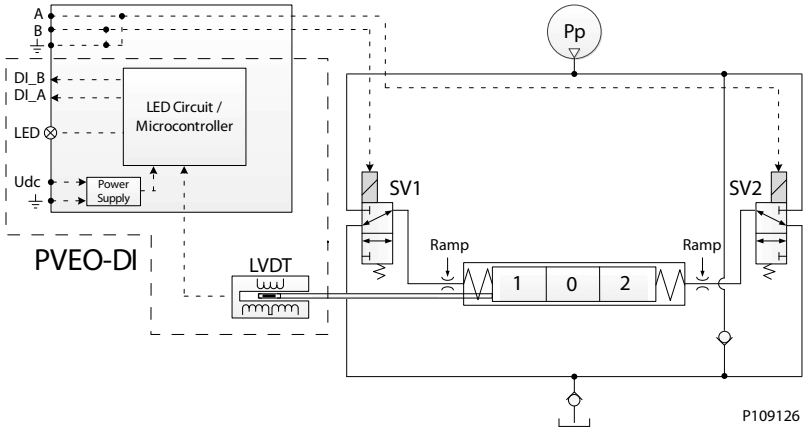

PVEA-DI functionality

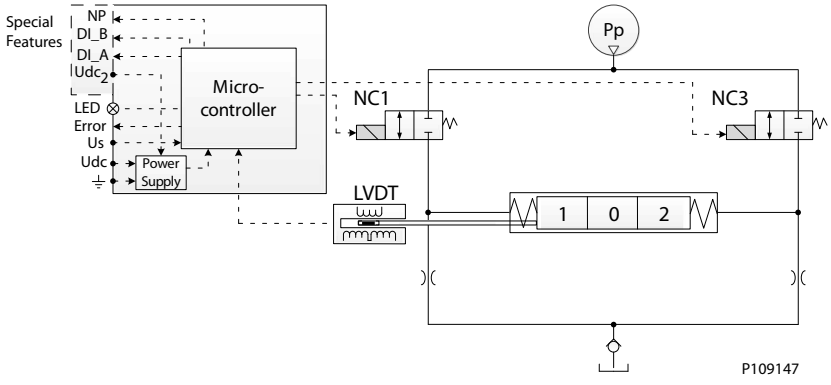

PVEH functionality

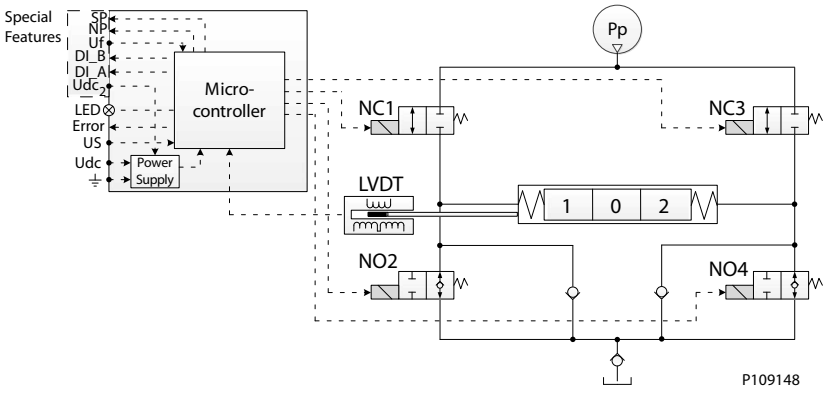

The Direction Indication feature uses a dual power supply with the 2x4 pin AMP and DEUTSCH connectors as shown in the chapter *Connector Overview* on page 37.

Special Features

When both DI_A and DI_B signals are High the main spool is in its neutral position.

When the DI_A signal goes Low and the DI_B signal stays High, the main spool is moving in the A-port direction, and vice versa. The relation between the direction indication feedback and the output signal is shown below.

Direction indication feedback

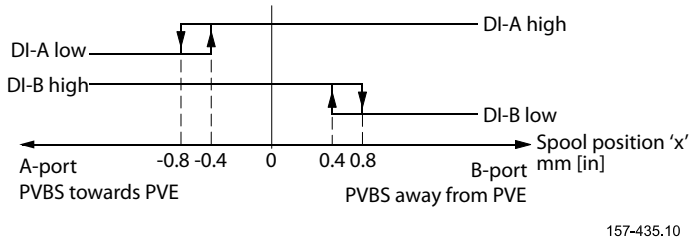

	A-Port	B-Port
DI signals a1, a2	–0.8 mm ± 0.4 mm	0.8 mm ± 0.4 mm
Max. DI load	200 mA	
DI High @ 20 mA	> U_{DC} – 1.5 V_{DC}	
DI High @ 100 mA	> U_{DC} – 2.0 V_{DC}	
DI Low	< 0.2 V_{DC}	

Special Features

Dedicated Float Pin (UF)

The Dedicated Float Pin (UF) feature is related to the PVEH-FLA actuator variant enabling the user to move the main spool into its float position by power. The PVEH-FLA uses 1x6 pin AMP orDEUTSCH connectors.

- Normal operation: Low or not connected
- High Float
- Input range: U_{DC}
- Max. voltage: 32 V_{DC}

PVEH-FLA functionality diagram

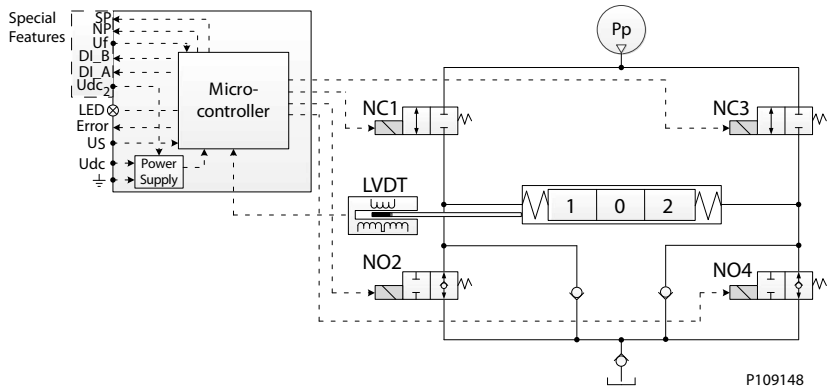

Special Features

Spool Position (SP)

The Spool Position (SP) feature available in the PVEH-SP/PVES-SP actuator variants enables the user to derive from the LVDT spool position of the main spool by means of an analog voltage signal on the dedicated spool position (SP) output pin.

PVEH-SP functionality diagram

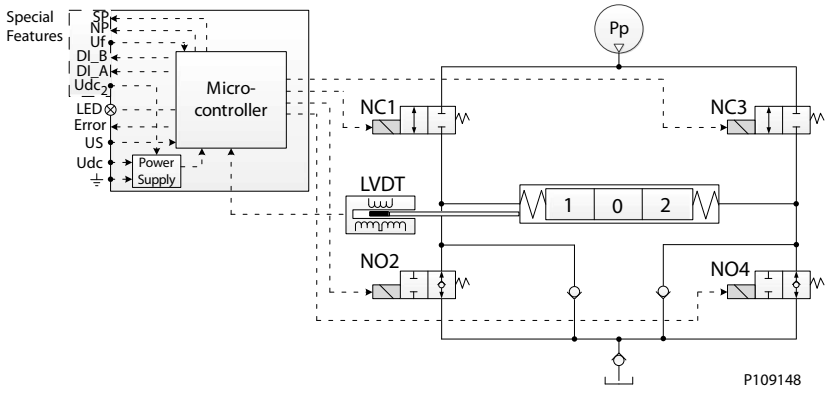

PVES-SP functionality diagram

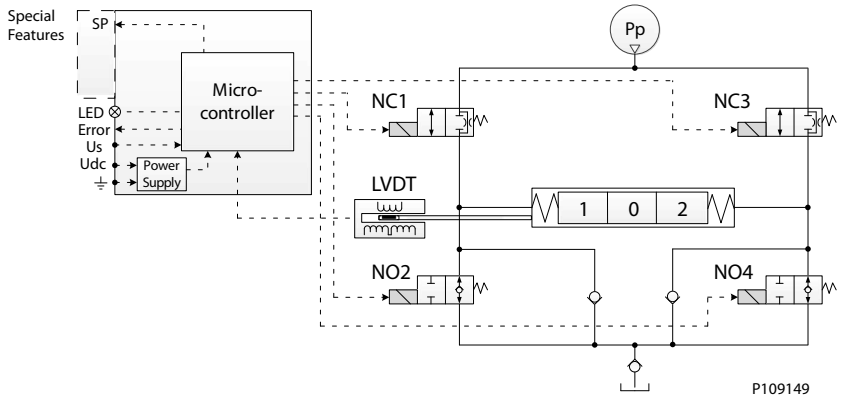

Spool Position feedback

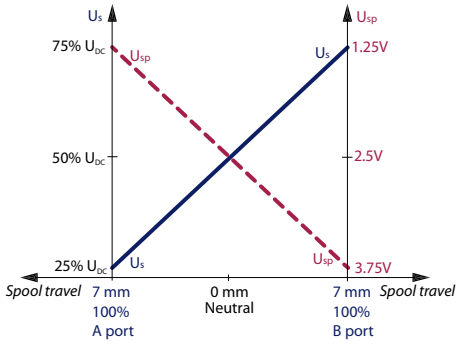

SP feedback signal from 0.5 to 4.0 V_{DC} inverted in direction relative to U_S 2.5 V_{DC} as the neutral value

SP from neutral to maximum stroke (mm)

SP maximum load is 0.5 mA

Output range for A-port: 2.5 – 1.25 V_{DC} and for B-port: 2.5 – 3.75 V_{DC}

The PVEH-SP/PVES-SP uses a 1x6 DEUTSCH connector. For more information, please see *Connector Overview* on page 37.

Special Features

Neutral Power-OFF (NP)

The Neutral Power-OFF (NP) feature available in the PVEA-NP and PVEH-NP actuator variants enables the user to identify whether the solenoid valves in the actuator are energized or de-energized via a dedicated neutral power-OFF (NP) output pin.

PVEA-NP functionality diagram

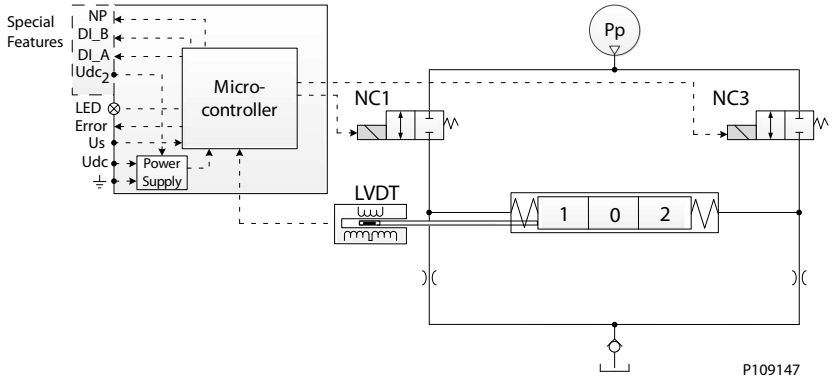

PVEH-NP functionality diagram

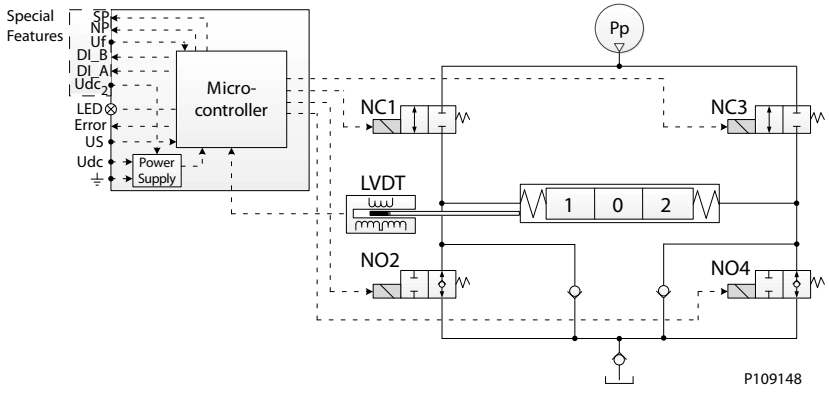

The Neutral Power-OFF (NP) signal is defined as shown below:

Solenoid disabling function (-NP) curves

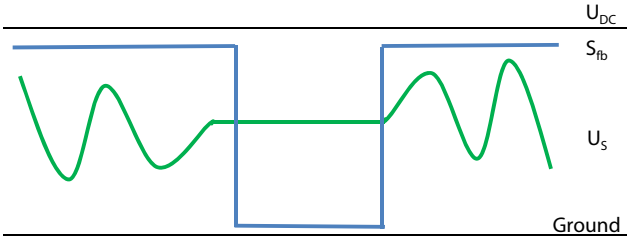

Normal operation from > U_{DC} to 2 V_{DC}

Power Save < 1 V_{DC} (solenoid valves de-energized)

NP maximum load is 50 mA

The PVEA-NP/PVEH-NP uses a 1x6 DEUTSCH connector. For more information, please see *Connector Overview* on page 37.

Special Features

Disable Mode

The PVEH-Uand PVES-U actuator variants controlled by a fixed 0-10 V_{DC} signal voltage (U_S), feature the ability to enter a disable mode. This causes the counteracting force on the main spool created by the solenoid valve bridge to deactivate, when using Manual OverRide (MOR).

The disable mode is entered by sending a signal voltage (Us) of 16.2% of 10 V_{DC} when in Power Save.

Performance Overview

PVE S7 Reaction Times

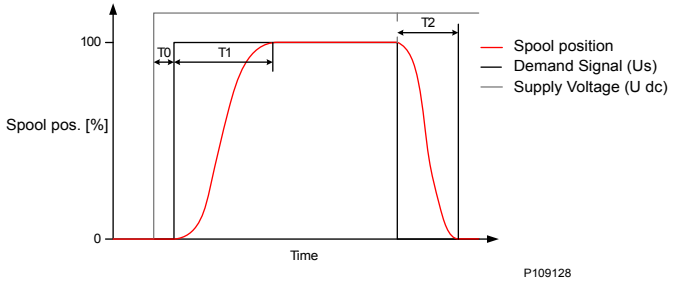

Reaction
T0 – Boot-up [ms]
T1 – Neutral to max. spool stroke
T2 – Max. spool stroke to neutral
T1 – Neutral to max. spool stroke
T2 – Max. spool stroke to neutral

PVG 32/100 PVEO—PVEM-R reaction times

Reaction	PVEO	PVEO-R	PVEO-HP	PVEM	PVEM-R
T0 [ms]	0	0	0	15	15
T1 @ Power ON [ms]	110	300	90	225	325
T2 @ Power OFF [ms]	110	110	70	110	110
T1 @ Constant U dc [ms]	110	300	90	210	310
T2 @ Constant U dc [ms]	110	110	70	90	90

PVG 32/100 PVEM-Q—PVES reaction times

Reaction	PVEM-Q	PVEA	PVEH	PVES
T0 [ms]	15	15	15	15
T1 @ Power ON [ms]	125	280	125	125
T2 @ Power OFF [ms]	110	200	110	110
T1 @ Constant U dc [ms]	110	265	110	110
T2 @ Constant U dc [ms]	90	200	90	90

Hysteresis and Ripple

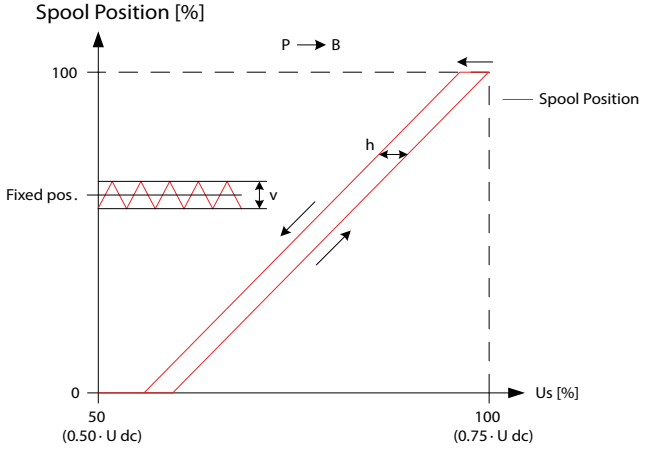

Performance Overview

Type	Hysteresis (h)	Steady state ripple @ fixed Us (v)
	Rated [%]	Rated [mm]
PVEM	15	0.0
PVEM-R	15	0.0
PVEM-Q	15	0.0
PVEA	2	0.3
PVEH	4	0.0
PVEH 256	1.5	0.0
PVES	0	0.2

The stated values are preliminary values and can be subject to change once an increased statistical basis is achieved.

Current Consumption

Type	Typical	Minimum	Maximum
	[mA]		
PVEO @ 12 Vdc	480	430	950
PVEO @ 24 Vdc	250	220	480
PVEO-HP @ 12 Vdc	750	660	1460
PVEO-HP @ 24 Vdc	380	340	740

Type	@ 12 Vdc	@ 24 Vdc
	[mA]	
PVEM	690	350
PVEA	290	150
PVEH	540	270
PVES	560	280

The stated values are preliminary values and can be subject to change once an increased statistical basis is achieved.

Oil Consumption

Type	Neutral	Locked position	Actuating
	[l/min]		
PVEO	0.0	0.0	0.9
PVEO-R	0.0	0.0	0.3
PVEO-HP	0.0	0.0	0.9
PVEM	0.0	0.0	0.5
PVEM-R	0.0	0.0	0.3
PVEM-Q	0.0	0.0	0.3
PVEA	0.0	0.4	1.0
PVEH	0.0	0.0	0.7
PVES	0.3	0.1	0.8

Dimension Overview

Dimension Overview for PVE Series 7

PVG 32/100 variants

PVEO/PVEM/PVEA	PVEH/PVES	Connector Height
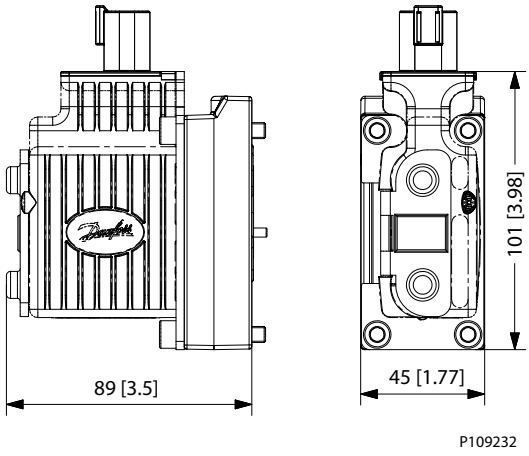	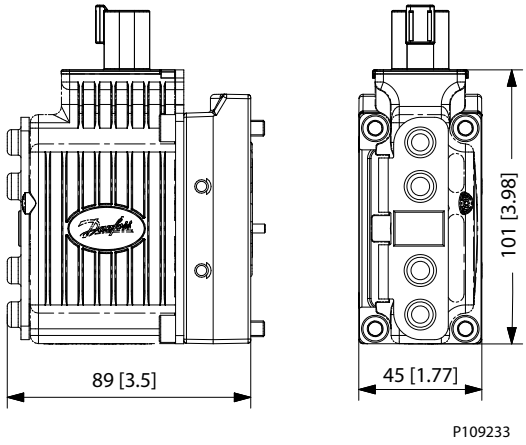	DEU = 30 mm [1.2 in] AMP = 38 mm [1.5 in] DIN = 40 mm [1.6 in]

PVG 120 variants

PVEO	PVEH/PVES	Connector Height
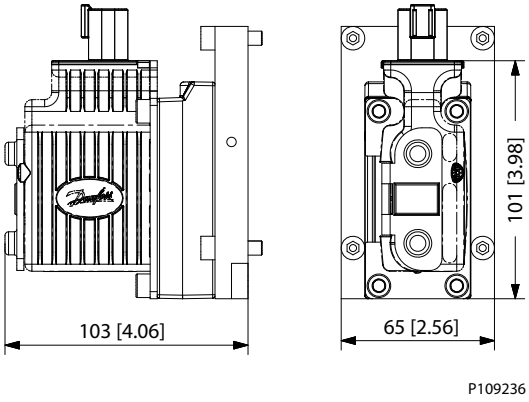	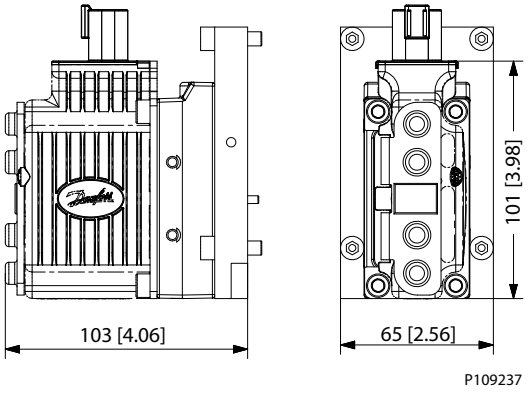	DEU = 30 mm [1.2 in] AMP = 38 mm [1.5 in] DIN = 40 mm [1.6 in]

Dimension Overview

PVG 128/256 variants

PVEO	PVEH	Connector Height
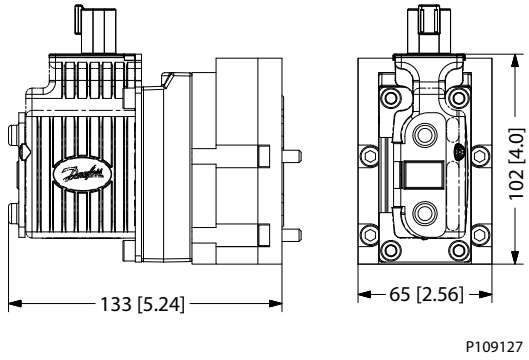	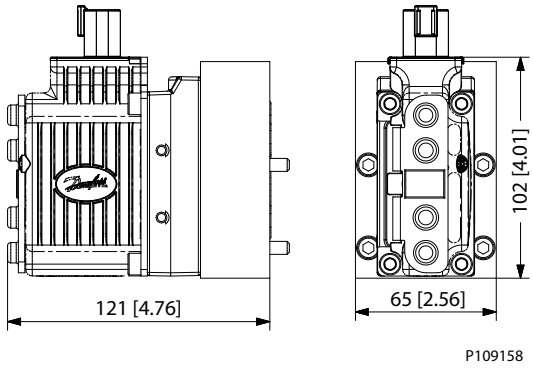	DEU = 30 mm [1.2 in] AMP = 38 mm [1.5 in] DIN = 40 mm [1.6 in]

ENGINEERING
TOMORROW

Products we offer:

- Bent Axis Motors
- Closed Circuit Axial Piston Pumps and Motors
- Displays
- Electrohydraulic Power Steering
- Electrohydraulics
- Hydraulic Power Steering
- Integrated Systems
- Joysticks and Control Handles
- Microcontrollers and Software
- Open Circuit Axial Piston Pumps
- Orbital Motors
- PLUS+1® GUIDE
- Proportional Valves
- Sensors
- Steering
- Transit Mixer Drives

Danfoss Power Solutions is a global manufacturer and supplier of high-quality hydraulic and electronic components. We specialize in providing state-of-the-art technology and solutions that excel in the harsh operating conditions of the mobile off-highway market. Building on our extensive applications expertise, we work closely with our customers to ensure exceptional performance for a broad range of off-highway vehicles.

We help OEMs around the world speed up system development, reduce costs and bring vehicles to market faster.

Danfoss – Your Strongest Partner in Mobile Hydraulics.

Go to www.powersolutions.danfoss.com for further product information.

Wherever off-highway vehicles are at work, so is Danfoss. We offer expert worldwide support for our customers, ensuring the best possible solutions for outstanding performance. And with an extensive network of Global Service Partners, we also provide comprehensive global service for all of our components.

Please contact the Danfoss Power Solution representative nearest you.

Comatrol
www.comatrol.com

Turolla
www.turollaocg.com

Hydro-Gear
www.hydro-gear.com

Daikin-Sauer-Danfoss
www.daikin-sauer-danfoss.com

Local address:

Danfoss
Power Solutions (US) Company
2800 East 13th Street
Ames, IA 50010, USA
Phone: +1 515 239 6000

Danfoss
Power Solutions GmbH & Co. OHG
Krokamp 35
D-24539 Neumünster, Germany
Phone: +49 4321 871 0

Danfoss
Power Solutions ApS
Nordborgvej 81
DK-6430 Nordborg, Denmark
Phone: +45 7488 2222

Danfoss
Power Solutions Trading (Shanghai) Co., Ltd.
Building #22, No. 1000 Jin Hai Rd
Jin Qiao, Pudong New District
Shanghai, China 201206
Phone: +86 21 3418 5200

Danfoss can accept no responsibility for possible errors in catalogues, brochures and other printed material. Danfoss reserves the right to alter its products without notice. This also applies to products already on order provided that such alterations can be made without changes being necessary in specifications already agreed.
All trademarks in this material are property of the respective companies. Danfoss and the Danfoss logotype are trademarks of Danfoss A/S. All rights reserved.

TMA s.r.l. Via S.Vito, 221
41057 SPILAMBERTO (MO)
Tel. ++39.059.78.17.11
Fax. ++39.059.78.16.06
info@tmawinches.com

ARGANI ° WINCHES ° CABRESTANTES ° TREUILS DE LEVAGE ° HUBWINDE

MANUALE D'USO E MANUTENZIONE
Pag.1 (I)

OPERATING SERVICE MAINTENANCE MANUAL
Pag.6 (GB)

MANUAL DE USO Y MANUTENCION
Pag.11 (E)

MANUEL D'UTILISATION ET ENTRETIEN
Pag.16 (F)

BETRIEB UND WARTUNGSANLEITUNGEN
Seite 21 (D)

Bilag 3

IT GARANZIA

1. Proprietà intellettuale
I modelli, disegni, schemi e progetti rimangono di nostra proprietà e non è permesso riprodurli, utilizzarli o cederli a terzi senza nostra espressa autorizzazione scritta.
2. Indicazioni tecniche
Le caratteristiche tecniche dei prodotti si devono intendere sempre come valore medio e non impegnative. Ci riserviamo la facoltà di apportare modifiche, in qualsiasi momento e senza preavviso.
3. Garanzia
L'esame della richiesta di garanzia ha come premessa che il Committente abbia soddisfatto tutti gli obblighi contrattuali. Ci assumiamo la garanzia per difetti di materiale e di lavorazione per un periodo di dodici mesi dalla data di consegna. L'obbligo che ci deriva dalla garanzia comporta la riparazione o la sostituzione dell'intera unità, o parte di essa, a nostro insindacabile giudizio. Per esaminare la richiesta di garanzia dobbiamo poter disporre dell'unità integra, così come consegnata. Ogni intervento o manomissione del Committente o di terzi su unità contestate, ed in particolare, la mancanza della targhetta, comporta la decadenza della garanzia. La garanzia non viene prestata nel caso di danni dovuti a negligenza o incompetenza dell'utilizzatore e comunque per uso non conforme alle caratteristiche o alle prescrizioni. Il termine di garanzia, per le unità riparate o sostituite in garanzia, viene prorogato oltre la scadenza originaria per un massimo di tre mesi dalla data dell'intervento o della restituzione. Tutte le spese di qualsiasi natura derivanti dallo smontaggio dell'unità e dal suo trasporto al nostro domicilio, come pure quelle derivanti dal trasporto dell'unità riparata o sostituita al domicilio dell'Utente, e del suo rimontaggio, sono a carico del Committente. Non sono a nostro carico per nessuna ragione addebiti per danni di qualsiasi natura, quali fermo macchina, mancato guadagno e spese di manodopera, salvo diversi accordi che devono essere concordati esclusivamente per iscritto.

GB WARRANTY

1. Intellectual property
Winch models, drawings and engineering are of our exclusive property. It is expressly forbidden to copy use or hand over to third parties such informations without a specific written permission.
2. Technical data
Technical data of products shall always be considered as medium and not binding. We do reserve the right to carry out modifications at any moment and without advance notice.
3. Warranty
The examination of a warranty claim is subject to the fulfilment by of all Customer contractual obligations. We do undertake the warranty for material and fabrication faults for a period of 12 months from delivery date. Our warranty obligations will cover the repair or the partial or complete renewal of claimed unit at our final decision. The examination of a warranty claim needs the availability of the complete unit as previously delivered. Any action carried out by the Customer or third parties to claimed units and specially the absence of the data plate will imply the warranty discontinuance. The warranty will not apply to damages or defects due to negligence, incompetence or use not conforming to features or instructions. The warranty period of units repaired or renewed under the warranty clause is extended for a maximum of 3 months starting from repair or redelivery date of the unit. All expenses of any kind to dismount and transport the unit to our residence as well as the ones to transport repaired unit to Customer residence and to refit such a unit are at Customer's charge.
Unless differently agreed in written we will not bear charges or expenses of any kind like machine stop, profit losses or manpower costs.

E GARANTIA

1. Propiedad intelectual
Los modelos, dibujos, esquemas y proyectos permanecen de nuestra propiedad y no pueden ser reproducidos, utilizados o cedidos a terceros sin nuestra autorización escrita.
2. Indicaciones técnicas
Las características técnicas de los productos se entienden siempre de valor medio y no vinculantes. Nos reservamos el derecho de efectuar modificaciones en cualquier momento y sin previo aviso.
3. Garantía
El examen de la petición de garantía presupone que el comprador haya cumplido con todos los compromisos contractuales. Acordamos la garantía por los defectos de material y de fabricación por un plazo de doce meses desde la entrega. Esto compromiso comporta la reparación o el reemplazo de toda o parte de la unidad según nuestra intachable opinión. Para poder examinar la petición de garantía, el comprador tiene que ponernos a disposición la unidad integra, así como entregada. En el caso de que el comprador o terceros intervengan sobre las unidades contestadas y, en particular, en falta de la placa de fábrica, la garantía decae automáticamente. La garantía no se acuerda en caso de averías debidas a negligencia o incompetencia del usuario y de todas maneras en caso de uso no conforme a las características detalladas o a las prescripciones. El plazo de garantía para las unidades reparadas o reemplazadas puede ser aplazado del vencimiento originario de máximo tres meses desde la fecha de intervención o de devolución. Todos los gastos de cualquier tipo debidos al desmontaje de la unidad y a su transporte a nuestro domicilio así como los debidos al transporte de la unidad reparada o reemplazada al domicilio del usuario y a su remontaje son en cargo al comprador. No nos hacemos cargo, por ningun motivo, de los adeudos por daños de cualquier tipo como paro máquina falta de beneficio y gastos de mano de obra, salvo otros acuerdos escritos.

F GARANTIE

1. Propriété intellectuelle
Les modèles, les dessins, les plans et les projets restent de notre propriété et ne peuvent pas être reproduits, utilisés ou cédés à tiers sans notre autorisation écrite.
2. Indications techniques
Les caractéristiques techniques des produits doivent s'entendre toujours de valeur moyenne et non compromettantes. Nous nous reservons le droit d'effectuer des modifications sans préavis et dans n'importe quel moment.
3. Garantie
La demande de garantie sera prise en considération à condition que le Commettant ait satisfait tous les engagements contractuels. Nous accordons la garantie pour défauts de matériel et de travail pour une période de douze mois à compter de la date de livraison. L'engagement que nous assumons au sujet de la garantie comporte le dépannage ou le remplacement de toute ou d'une partie de l'unité et ceci à notre jugement sans appel. Pour prendre en considération la demande de garantie, nous devons pouvoir disposer de l'unité complète, ainsi comme elle a été livrée. Chaque intervention du Commettant ou de tiers sur les unités contestées, et en particulier le manque de la plaquette, comporte la déchéance de la garantie. La garantie n'est pas prêtée en cas d'inconvénients ou de dommages dûs à négligence ou à incompétence ou, de toute façon, à l'emploi de matériaux non conformes aux instructions. Pour les pièces et les unitées dépannées ou remplacées en garantie, le délai de garantie s'entend prolongé au-delà de l'échéance originaire jusqu'à un maximum de trois mois à compter de leur date d'intervention ou de retour. Tous les frais de n'importe quelle nature, dûs au démontage de l'unité ou à son transport auprès de notre siège ainsi que ceux dûs au transport de l'unité dépannée ou remplacée chez l'utilisateur et à son remontage sont à la charge du Commettant. Les dommages de n'importe quelle nature, soit arrêt machine, gain manqué et frais de main-d'oeuvre, ne pourront en aucun cas nous être débités à moins que d'autres accords, qui devront cependant être confirmés par écrit, n'aient été pris.

D GEWÄHRLEISTUNG

1. Geistiges Eigentum
Die Modelle, Zeichnungen, Pläne und Projekte bleiben von unserem Eigentum; ohne unsere, ausdrücklische schriftliche Zustimmung können diese nicht nachgedruckt, verwendet oder Dritten abgetreten werden.
2. Technische Eigenschaften
Die technischen Eigenschaften der Produkte sind immer von Mittelwert und unverbindlich zu verstehen. Wir behalten uns vor, Änderungen jederzeit und ohne vorherige Benachrichtigung auszuführen.
3. Gewährleistung
Eine Gewähr wird nur übernommen, wenn der Auftraggeber seinen vertraglichen Verpflichtungen nachgekommen ist. Für Material- und Bearbeitungsfehler sind wir nur für einen Zeitraum von 12 Monaten ab Lieferungsdatum verantwortlich. Unsere Gewährleistungspflicht ist auf die Reparatur bzw. Ersetzung der Gesamt- oder Teileinheit nach unserem unanfechtbaren Dafürhalten beschränkt. Um den Gewährleistungsantrag in Erwänung zu ziehen, muß uns die Gesamteinheit - wie im Lieferzustand - beigestellt werden. Jede Arbeit oder Handhabung seitens des Auftraggebers oder Dritter an beanstandeter Einheit, insbesondere das Fehlen des Typschilds, läßt den Gewährleistungsanspruch verfallen. Für Schäden, die der Nachlässigkeit oder Unfähigkeit des Bedieners zuzuschreiben oder bei unerlaubtem Einsatz entstanden sind, übernimmt TMA keine Verantwortung. Die Gewährleistungsfrist für die reparierten oder ersetzten Einheiten wird höchstens drei Monate ab dem Nachbesserungs- oder Rückgabedatum verlängert. Alle Demontage-, Tranport-, Rücktranport- und Wiedereinbaukosten hinsichtlich der reparierten oder ersetzten Einheiten gehen zu den Lasten des Auftraggebers. Soweit nicht ausdrücklich schriftlich etwas anderes vereinbart ist, sind alle weiteren Ansprüche des Auftraggebers für unmittelbaren und mittelbaren Schaden wie z.B. Wagenstand, Verdienstausfall und Arbeitskosten, ausgeschlossen.

PREMESSA

In questo manuale sono utilizzati tre tipi di avvertimenti per la sicurezza, che evidenziano altrettanti livelli di rischio.

"PERICOLO"
È usato per evidenziare situazioni pericolose per l'operatore, e quindi, per prevenire gravi infortuni anche mortali.

"ATTENZIONE"
È usato per evidenziare situazioni pericolose per l'integrità e l'efficienza dell'argano e, quindi,possono riguardare anche la sicurezza e l'incolumità delle persone.

"IMPORTANTE"
È usato per richiamare l'attenzione su importanti informazioni che l'operatore deve conoscere e tener presente.

ATTENZIONE
NON USARE L'ARGANO PRIMA DI AVER LETTO CON ATTENZIONE QUESTO MANUALE.

PERICOLO
IL PRESENTE APPARECCHIO NON È DESTINATO AD IMPIANTI PER IL SOLLEVAMENTO O LO SPOSTAMENTO DI PERSONE.

ATTENZIONE
Leggere attentamente questo manuale prima di procedere alle operazioni di avviamento, di lavoro, di manutenzione, o prima di effettuare qualsiasi intervento sull'argano. La maggior parte degli incidenti che avvengono durante il lavoro sono dovuti alla inosservanza delle semplici norme di sicurezza o delle più elementari precauzioni. Per tale motivo, molti incidenti possono essere evitati conoscendo le cause e procedendo con opportuna attenzione.

ATTENZIONE
Questo manuale intende essere una guida per l'impiego corretto e sicuro dell'argano, e per la sua razionale manutenzione.
La costante osservanza delle norme in esso contenute garantisce le migliori prestazioni,l'economia di esercizio ed una lunga durata dell'argano e consente di evitare le più comuni cause di incidenti che possono verificarsi durante il lavoro o la manutenzione.
Una volta letto, questo manuale va conservato integro in tutte le sue parti, in prossimità dell'argano, in modo che sia sempre disponibile.
Nel caso si presentassero problemi di comprensione di questo manuale o di parti di esso,raccomandiamo di contattare la ditta *TMA*.
Per qualsiasi tipo di assistenza tecnica rivolgersi alla ditta *TMA*.

IMPORTANTE
La ditta *TMA* si riserva il diritto di apportare modifiche e miglioramenti ai propri argani in qualsiasi momento senza alcun obbligo di preavviso e non risponde per qualsiasi differenza che possa intercorrere fra le caratteristiche dell'argano e le descrizioni del presente libro uso e manutenzione.

INDICE GENERALE

PREMESSA..... 3
INDICE GENERALE..... 3
1. CAPITOLO PRIMO. INFORMAZIONI
1.1 Dati di identificazione: peso e dimensioni..... 4
1.2 Descrizione generale argano e dei dispositivi di sicurezza..... 4
1.3 Avvertenze generali. Norme di sicurezza..... 4
1.4 Trasporto e consegna. Condizioni di fornitura..... 4
2. CAPITOLO SECONDO. FUNZIONAMENTO E INSTALLAZIONE
2.1 Installazione..... 4
2.2 Lubrificazione..... 5
2.3 Montaggio del cavo..... 5
2.4 Impianto idraulico: suggerimenti e prescrizioni..... 6
2.5 Condizioni d'utilizzo..... 6
2.6 Messa in funzione..... 6
3. CAPITOLO TERZO. MANUTENZIONE
3.1 Operazioni di manutenzione..... 7
3.2 Eventuali problemi: cause e soluzioni..... 7
4. CAPITOLO QUARTO. LISTA RICAMBI E COMPLESSIVO
4.1 Complessivo..... 7
4.2 Lista ricambi..... 7

CAPITOLO PRIMO

ATTENZIONE
Per un corretto utilizzo dell'argano al fine di ottenere un buon funzionamento nel tempo, si consiglia di leggere con attenzione le seguenti note che permettono di ottenere una buona conoscenza del prodotto.

1. INFORMAZIONI

1.1 Dati di identificazione, peso e dimensioni

Per i dati di identificazione e peso vedere la targhetta rivettata sull'argano.
Per caratteristiche e dimensioni vedere allegato n.1 (Pag.28).

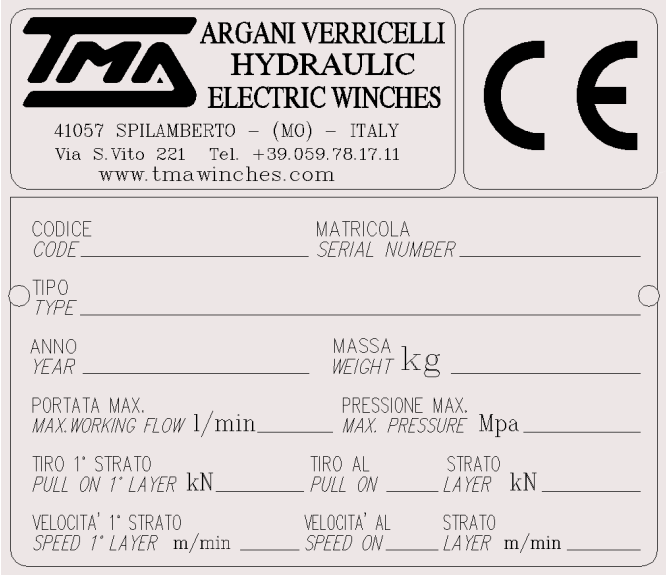

1.2 Descrizione generale argano e dei dispositivi di sicurezza

Gli elementi principali che costituiscono gli argani *TMA* sono:
Motore: L'organo che fornisce la coppia utile per movimentare il carico.
Freno di stazionamento: È il dispositivo di sicurezza che, creando una coppia resistente, contrasta il movimento del carico. Interviene quando si toglie energia al motore. Agisce sulla coppia di ingresso ed ha normalmente un valore pari a due volte la coppia motrice. È possibile, a richiesta, prevedere un ulteriore freno di sicurezza che agisce direttamente sul tamburo.
Riduttore: Dispositivo che moltiplica la coppia erogata dal motore per ottenere la coppia necessaria alla movimentazione del carico.
Tamburo: È l'elemento destinato alla raccolta del cavo ed è delimitato da due flange. Come elemento di sicurezza, il diametro esterno delle flange laterali è maggiore di una quantità pari a tre volte il diametro del cavo rispetto al diametro esterno dell'ultimo strato utile.
Supporto: Struttura che sostiene il tamburo e gli altri elementi costitutivi dell'argano.
Dispositivi di finecorsa
(RES 4.1.2.3 della Direttiva 2006/42/CE): Possono essere a contagiri o a sensore e servono per mantenere l'ampiezza dei movimenti del carico entro i limiti previsti.
Vengono forniti in base alla specifica esigenza del cliente e al tipo di applicazione.
Pressacavo: È il dispositivo che evita che il cavo, senza tensione, si allenti o si srotoli sul tamburo.
Limitatore di tiro (EN 12077-2)
È il dispositivo di sicurezza che impedisce che l'argano possa sollevare un carico superiore al massimo consentito o che venga sollecitato con un carico anomalo. Il dispositivo viene preventivamente tarato dalla *TMA* per il valore del carico massimo ammissibile così come è stato specificato in fase di ordine.
Valvola di controllo del carico (per argani idraulici)
Ha la funzione di impedire che la velocità di rilascio del carico sia superiore a quella ottenibile dall'impianto e di bloccare il movimento in caso di rottura dei tubi.
È flangiata normalmente sul motore.

1.3 Avvertenze generali per la sicurezza

1)Verificare che l'argano sia conforme alle vostre necessità e che rispetti le normative in vigore.
2) Realizzare sulla macchina un sistema di fissaggio sicuro e rigido.
3) Posizionare l'argano in modo corretto utilizzando tutti i fori di fissaggio ed assicurarsi che le viti di fissaggio siano idonee e correttamente serrate.
4) Nel caso l'argano sia di facile accesso per terzi realizzare le opportune protezioni come richiesto dalla Direttiva 2006/42/CE
5) Inserire nel tamburo la quantità di olio necessaria per una corretta lubrificazione e verificarne il livello.
6) Non maneggiare il cavo senza indossare guanti antinfortunistici e non tentare mai di modificare la posizione del cavo sotto carico.
7) Accertarsi che il cavo sia correttamente ancorato al tamburo e abbia caratteristiche e dimensioni compatibili con le caratteristiche dell'argano.
8) Verificare che il senso di avvolgimento del cavo sia corretto e conforme a quello indicato sull'argano.
Un corretto montaggio del cavo contribuisce ad aumentarne la vita.
9) Verificare che il cavo sia integro e non presenti fili rotti o pieghe che ne possono provocare la rottura.
10) Verificare che i dispositivi di sicurezza siano funzionanti ed efficaci.
11) Accertarsi che le condizioni di funzionamento siano coerenti con le caratteristiche dell'argano.
12) Non realizzare tiri con carichi superiori a quelli massimi consentiti.

1.4 Trasporto e consegna - condizioni di fornitura

Ogni argano viene consegnato montato, collaudato ed adeguatamente imballato su pallet.
Al momento della consegna controllare l'integrità del prodotto; in caso di danni comunicare immediatamente i fatti al trasportatore.
Per la movimentazione dell'argano vedere allegato n.7 (Pag.28).

CAPITOLO SECONDO

2. INSTALLAZIONE E FUNZIONAMENTO

2.1 Installazione

- Gli argani *TMA*, se utilizzati con asse orizzontale possono essere montati in qualsiasi posizione rispettando le forature esistenti.
For use in different configurations, contact the service TMA.
- Per evitare che nell'argano si creino delle tensioni anomale che potrebbero provocare una rapida usura degli organi interni è necessario che il supporto sul quale verrà fissato l'argano sia rigido e piano.
- Posizionare l'argano sulla piastra e verificare che i punti di appoggio aderiscano perfettamente al piano della piastra del supporto.
Qualora rimanesse della luce fra i piani di appoggio, spessorare opportunamente e, solo successivamente, serrare le viti di fissaggio.
Suggeriamo di utilizzare sempre tutti i fori di fissaggio previsti e di usare viti con caratteristiche non inferiori alla classe 8.8 serrandole con la dovuta coppia.
- La posizione dell'argano sulla piastra di ancoraggio deve essere tale da realizzare una perfetta perpendicolarità tra l'asse del tamburo e la linea congiungente la mezzeria del tamburo e la prima puleggia.
Piccole deviazioni possono provocare un cattivo avvolgimento della fune sul tamburo.
- La distanza tra l'argano e la prima puleggia deve esseretale da rispettare l'angolo di funzionamento caratteristico del cavo.

ATTENZIONE
Se l'argano è installato in posizione tale da essere facilmente accessibile, è necessario che il tamburo e le parti in movimento siano opportunamente protette con relative protezioni (2006/42/CE). E' necessario concordare con TMA l'eventuale fornitura di detti accessori sulle effettive esigenze del cliente.

2.2 Lubrificazione

- Lubrificazione interna.
Poiché gli organi interni dell'argano quali riduttori cuscinetti e freni lavorano in bagno d'olio, per ottenere un buon funzionamento è necessario garantirne una idonea lubrificazione mantenendo sempre il giusto livello di lubrificante.
- Per condizioni di uso leggero è ammesso l'utilizzo di olio idraulico di ottime caratteristiche con viscosità compatibile con le condizioni di utilizzo e ambientali (secondo ISO 3448 in ambienti temperati -5 °C ÷ 40 °C viscosità VG32 - VG46, in ambienti caldi 40 °C ÷ 65 °C viscosità VG64).
Per condizioni di uso gravoso usare un olio specifico per ingranaggi con viscosità compatibile alle condizioni ambientali (secondo ISO 3448 in ambienti temperati -5 °C ÷ 40 °C viscosità VG100 - VG150, in ambienti caldi 40 °C ÷ 65 °C viscosità VG150-220).
Per altre condizioni ambientali contattare la *TMA*.

ATTENZIONE
Gli argani *TMA* vengono spediti senza olio di lubrificazione. Se l'argano viene consegnato con la fune già montata, l'olio di lubrificazione è già inserito nel tamburo nella giusta quantità e del tipo ISO VG 46.
Prima di mettere in servizio l'argano effettuare il riempimento del tamburo inserendone la quantità di olio indicata dall'allegato n.2 (Pag.28). Tale quantità è idonea per riempire metà tamburo. Verificare il livello e, se necessario, effettuare le opportune correzioni.
La temperatura dell'olio di lubrificazione non deve superare il valore di 100°C.

2.3 Montaggio del cavo

ATTENZIONE
Nell'avvolgere il cavo, verificare che il senso di rotazione del tamburo sia uguale a quella indicata dalla freccia dell'adesivo applicato sul tamburo dell'argano.

PERICOLO
Qualora il cavo fosse avvolto sul tamburo senza rispettare il giusto senso di rotazione si potrebbe perdere il controllo del carico con gravi rischi per persone e cose.

ATTENZIONE
Per invertire il senso di rotazione del tamburo non è normalmente sufficiente invertire la posizione di attacco del cavo. Si consiglia pertanto di contattare l'ufficio assistenza *TMA* prima di procedere a modifiche o manomissioni.

PERICOLO
Non montare un cavo di lunghezza superiore al massimo ammissibile in quanto si otterrebbero strati non conformi alle normative di sicurezza.

Inserire il capo del cavo nell'apposita asola posta ad un lato del tamburo dall'interno verso l'esterno (fig.1).

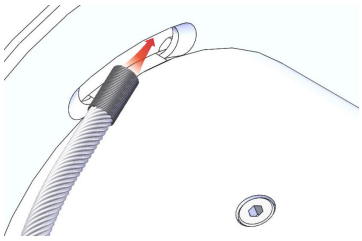

(fig.1)

2.3.1 Montaggio con tasca e radancia
Il cavo va inserito nella tasca, realizzando un occhiello nel quale va inserito il cuneo (fig.2).

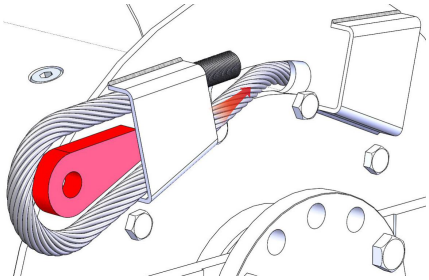

(fig.2)

Tirare il cavo dal lato opposto in modo da costringere il tutto nella tasca (fig.3).

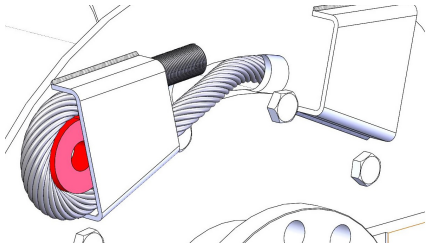

(fig.3)

2.3.2 Montaggio con morsetti

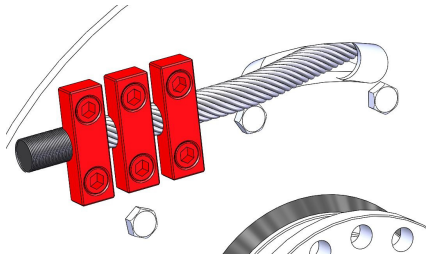

(fig.4)

Serrare le viti dei morsetti (fig.4) in modo da bloccare il cavo dopo averlo inserito come in fig.1.

PERICOLO
Verificare che le viti di fissaggio dei morsetti non oltrepassino la lamiera dell'aletta. Nel caso in cui ciò accada, accorciare le viti opportunamente onde evitare che la fune si danneggi seriamente.

PERICOLO
È necessario lasciare un minimo di 4 spire di cavo sempre avvolte sul tamburo per garantire la trattenuta del carico.
Il sistema di fissaggio del cavo presente sull'argano non è ritenuto una sufficiente garanzia per la tenuta del carico.

ATTENZIONE
Nel primo montaggio occorre realizzare una perfetta compattazione del cavo sul tamburo senza lasciare vuoti tra le spire. Avvolgere il cavo sottoponendolo ad un'opportuna tensione. Il cavo che non è stato ben compattato si può facilmente danneggiare potendosi incuneare fra le spire sottostanti, quando si applica il carico .

2.4 Impianto idraulico: suggerimenti e prescrizioni

ATTENZIONE
Il corretto funzionamento dell'argano è condizionato dall'impianto idraulico nel quale tale apparecchio è inserito.
Verificare che i valori caratteristici dell'impianto idraulico relativamente a pressione e flusso massimi siano compatibili con le caratteristiche di funzionamento dell'argano.

Gli argani idraulici *TMA* sono dotati di un freno a dischi multipli ad azione negativa e di valvola per il controllo del carico flangiata sul motore.
- Freno
La coppia frenante si ottiene dall'attrito che si genera tra una serie di dischi statici (collegati alla struttura fissa) alternati ad una serie di dischi mobili (collegati all'albero di entrata) pressati tra loro dalla forza esercitata da una serie di molle. L'azione delle molle può essere contrastata da un opportuno pistone azionato idraulicamente.
Per aprire il freno, una piccola quantità di olio viene prelevata dalla linea in pressione del circuito del motore ed inviata al pistone posto all'interno del corpo freno (pressione minima di apertura 2.6 - 2.8 MPa, pressione massima ammissibile 28 - 30 MPa).
In tal modo si equilibra l'azione delle molle e si liberano i dischi mobili del freno. È così possibile la libera rotazione dell'albero del motore.
Quando si arresta l'argano si pone la leva della valvola di distribuzione in posizione centrale. Affinché il freno possa richiudersi, bloccando il movimento, occorre che l'olio defluisca dal pistone, permettendo alle molle di esercitare la loro spinta sui dischi. È fondamentale che la spola della valvola di distribuzione che comanda il motore abbia una configurazione che permetta al pistone di scaricare l'olio interno. Una configurazione della spola con centro ad "H" è pertanto necessaria.
Riferirsi allo schema idraulico in allegato n.6 (Pag.28).

PERICOLO
L'uso di una spola a centro chiuso, impedisce il deflusso dell'olio del pistone, e rende inefficace sia il freno di stazionamento che la valvola di controllo del carico. In tal caso si potrebbe avere la caduta incontrollata del carico a causa dello svuotamento, per cavitazione, del motore idraulico .

- Valvola di controllo del carico.
La valvola di controllo del carico, normalmente flangiata sul motore, ha la funzione principale di effettuare una frenatura dinamica del carico. Impedisce che la velocità del motore possa essere superiore a quella permessa dal flusso dell'olio. Ha anche la funzione di bloccare il movimento del carico, tramite l'azione del freno, nel caso della rottura della tubazione di alimentazione del motore.

PERICOLO
Non modificare la taratura della valvola di controllo del carico.
La valvola viene tarata dalla *TMA* durante il collaudo dinamico al banco. Normalmente il collaudo viene effettuato dalla *TMA* con carichi superiori al tiro massimo nominale.
Modificare la taratura della valvola potrebbe provocare la perdita del controllo del carico.

- Tubazione.
La corretta realizzazione dell'impianto idraulico è determinante per il buon funzionamento dell'argano. Occorre pertanto dimensionare la sezione utile delle tubazioni proporzionandola al flusso di olio e alla lunghezza dell'impianto. Un'insufficiente sezione dei tubi determina cadute di pressione di linea con conseguente aumento della pressione di funzionamento di tutto l'impianto e contropressione sulla linea di ritorno. In tal modo si corre il rischio di avere un cattivo funzionamento dell'argano od anche un suo possibile danneggiamento.

ATTENZIONE
Per evitare inconvenienti al buon funzionamento dell'argano, la pressione necessaria a far fluire l'olio nelle tubazioni, non deve mai essere superiore a 0.5-1.0 MPa.

Per collegare l'argano all'impianto di alimentazione idraulico fare riferimento allo schema idraulico e al foglio tecnico fornito, con le corrette dimensioni e posizioni delle bocche di mandata, ritorno e per il drenaggio. Il diametro interno di tale tubo non deve essere inferiore a 1/4".

ATTENZIONE
Nel caso si verificasse una strozzatura o un'occlusione nella linea di drenaggio si creerebbero sicuramente danni al motore e all'argano con probabili perdite di olio.

- Valvola di sicurezza.
Prevedere sempre una valvola di sicurezza di massima pressione, tarata ad un valore superiore del 10-20% rispetto al valore della pressione di lavoro indicata in allegato 2 (Pag.28).
Normalmente tale valvola è parte integrante della valvola di distribuzione, ma, qualora non fosse presente, occorre prevederla nella linea di alimentazione dell'argano.

ATTENZIONE
I valori di pressione di funzionamento, riportati sui diagrammi di carico *TMA*, si riferiscono ad utilizzo con pressione di ritorno pari alla pressione atmosferica.

- Filtro
Per ottenere una corretta durata dell'argano utilizzare sempre sull'impianto idraulico un filtro di idonea capacità filtrante.
Per motori a pistoni 10 micron
Per motori orbitali 25 micron
Una periodica sostituzione del filtro allunga la vita di tutti i componenti dell'impianto.
- Olio
Per l'impianto idraulico utilizzare olio di buona qualità e con caratteristiche compatibili con i componenti utilizzati e con le condizioni ambientali.

ATTENZIONE
La temperatura dell'olio idraulico dell'impianto non deve superare la temperatura di 60 °C.

2.5 Condizioni d'utilizzo

ATTENZIONE
L'argano è stato costruito per un impiego in un campo di temperature ambientali compreso tra -20 °C e +50°C.
Utilizzare l'argano al di fuori di questo campo di temperature costituisce uso improprio e non autorizzato dal costruttore.
Per altre condizioni vedi allegato n.2 (Pag.28).

2.6 Messa in funzione
- Verificare il riempimento dell'olio di lubrificazione.
- Prima di montare il cavo, effettuare alcune manovre a vuoto per verificare la correttezza dell'impianto.
- Montare il cavo secondo le indicazioni precedenti
- Con un carico ridotto effettuare alcuni sollevamenti e verificare il corretto funzionamento dei dispositivi di fine corsa.
- Con il carico nominale effettuare alcune prove e verificare la corrispondenza tra il valore della pressione di lavoro e quello indicato dalla scheda di collaudo *TMA*.
Verificare il corretto intervento del limitatore di tiro.

CAPITOLO TERZO

3. MANUTENZIONE

3.1 Operazioni di manutenzione

Gli argani *TMA* sono stati progettati in modo da ridurre al minimo gli interventi di manutenzione.Prima di ogni intervento di manutenzione è necessario accertarsi che l'argano non possa essere accidentalmente azionato durante le operazioni. E' inoltre obbligatorio indossare tutti i dispositivi di protezione individuale idonei per la specifica operazione e valutando le condizioni ambientali di intervento.

ATTENZIONE
Ogni cinque anni l'argano deve essere sottoposto ad una revisione completa da effettuarsi presso un'officina specializzata.

- Verifica dell'olio di lubrificazione
Sia il freno che gli ingranaggi lavorano a bagno d'olio. Verificare che non vi siano perdite di olio di lubrificazione e controllare periodicamente una volta al mese il livello. Procedere eventualmente al ripristino. Si raccomanda la sostituzione dell'olio dopo 250 ore di funzionamento o almeno una volta all'anno.

ATTENZIONE
L'olio che viene sostituito deve essere smaltito secondo le normative vigenti nella località di utilizzo.

- Verifica del cavo
Tenere ben lubrificato il cavo con oli molto viscosi o grassi leggeri contenenti additivi adesivi con grafite, bisolfuro di molibdeno o trifosfato di sodio.

PERICOLO
Prima di operare con l'argano, verificare sempre che il cavo sia integro. Se presenta schiacciature o fili rotti, sostituirlo con un cavo nuovo idoneo.

- Verifica del serraggio viti
Verificare periodicamente il serraggio delle viti che fissano l'argano alla struttura.

3.2 Eventuali problemi: cause e soluzioni

PROBLEMA	CAUSA	SOLUZIONE
Il carico cade velocemente	Cavo montato in senso contrario Valvola di controllo carico starata Posizione errata della valvola controllo carico Flusso d'olio in direzione errata	Montare la fune nel senso corretto Contattare l'assistenza tecnica Montare la valvola nella posizione corretta Invertire la posizione dei tubi di mandata e ritorno
Il carico scende lentamente in continuo	Freno inefficiente Contropressione nel freno Distribuzione centro chiuso	Contattare l'assistenza tecnica Eliminare le contropressioni nell'impianto Sostituire la spola
L'argano non solleva il carico	Taratura bassa Motore danneggiato Freno bloccato	Modificare la taratura Verifica drenaggio. Sostituire il motore Contattare l'assistenza tecnica
L'argano solleva lentamente il carico	Taratura bassa Motore danneggiato Flusso insufficiente Freno non aperto	Modificare la taratura Verifica drenaggio. Sostituire il motore Controllare il flusso della pompa Contattare l'assistenza tecnica
Perdita di olio	Tenute danneggiate Tappi lenti Trafilatura freno	Contattare l'assistenza tecnica Serrare i tappi dell'olio Contattare l'assistenza tecnica
L'argano a vuoto non ruota	Ingranaggi danneggiati Assenza di flusso Pressione impianto inesistente	Contattare l'assistenza tecnica Controllare il flusso della pompa Controllare la pompa
Eccessiva rumorosità	Ingranaggi rumorosi Cuscinetti di banco danneggiati Assenza olio di lubrificazione Flusso di olio superiore all'ammissibile Motore rumoroso	Contattare l'assistenza tecnica Contattare l'assistenza tecnica Controllare il livello dell'olio nel tamburo Controllare il flusso della pompa Contattare l'assistenza tecnica
Il cavo non si avvolge correttamente sul tamburo	Angolo di deviazione tra puleggia (o rinvio) e tamburo troppo elevato La fune non è in tensione durante l'avvolgimento	Riportare l'angolo di deviazione entro limiti accettabili (2°) Mettere la fune in tensione durante l'avvolgimento
Perdita di olio dal tappo di sfiato	Tenuta del motore danneggiate Tenute del freno inefficienti	Sostituire le tenute
L'argano tende a vibrare	Viti di fissaggio lente	Serrare le viti di fissaggio con la coppia adeguata

CAPITOLO QUARTO

4. LISTA RICAMBI E COMPLESSIVO

4.1 Complessivo

Vedere allegato n.4 (Pag.28).

4.2 Lista ricambi

Vedere allegato n.5 (Pag.28).

INTRODUCTION

Below mentioned three types of safety warning, each one related to a different level of operational risk are used throughout present manual.

"DANGER"
Used to emphasize situations which do involve a danger for the operator, thus to prevent possible accidents involving serious and mortal injuries.

"WARNING"
Used to emphasize situations involving danger for the entirety and the efficiency of the winch, also in connection with people's safety.

"IMPORTANT"
Used to draw the operator's attention to primary informations he shall be aware and bear in mind.

WARNING
DO NOT USE THE WINCH BEFORE A CAREFUL READ OF PRESENT MANUAL.

DANGER
THE WINCH DESCRIBED ON PRESENT MANUAL SHALL NOT BE USED TO LIFT OR MOVE PEOPLE.

WARNING
Read carefully present manual before start, use or carry out any maintenance operation on the winch. As the major part of industrial accidents are the consequence of failures to comply with simplest safety rules or most elementary precautions, the awareness of possible causes and the due attention to running operations can avoid a lot of accidents.

WARNING
Present manual is issued with the scope to be a guide for the correct and safe use of the winch and for its rational maintenance.
After careful reading keep present manual in unabridged condition and near the winch in order to be always available.
In case of non understanding of present manual or parts of such, we recommend to contact Messrs *TMA*.
For any kind of technical assistance please contact Messrs *TMA*.

IMPORTANT
Messrs *TMA* do reserve the right to modify and upgrade the winches they fabricate at any moment and without advance notice and will not be liable for any difference between winch features and the specifications of present use and maintenance manual.

GENERAL INDEX

8.....	INTRODUCTION
8.....	GENERAL INDEX
	SECTION 1. INFORMATIONS
9.....	1.1 Identification data, weights and dimensions
9.....	1.2 General description of winch and safety devices
9.....	1.3 General warnings, safety instructions
9.....	1.4 Transport, delivery, supply conditions
	SECTION 2. OPERATION AND INSTALLATION
9.....	2.1 Installation
10.....	2.2 Lubrication
10.....	2.3 Fitting of the wire
11.....	2.4 Hydraulic system, recommendations and instructions
11.....	2.5 Service conditions
11.....	2.6 Start up service
	SECTION 3. MAINTENANCE
12.....	3.1 Maintenance operations
12.....	3.2 Trouble shooting
	SECTION 4. GENERAL ASSEMBLY AND SPARE PARTS LIST
12.....	4.1 Drawing assembly
12.....	4.2 Spare part list

SECTION 1

WARNING
We do recommend to carefully read at following notes for a good knowledge of the product, a correct use and a long lasting good performance of the winch.

1. INFORMATIONS

1.1 Identification data, weight and dimensions

Identification data and weight are listed on the data plate riveted to the winch.
Winch features and dimensions are shown on attachment n.1(Pag.28)

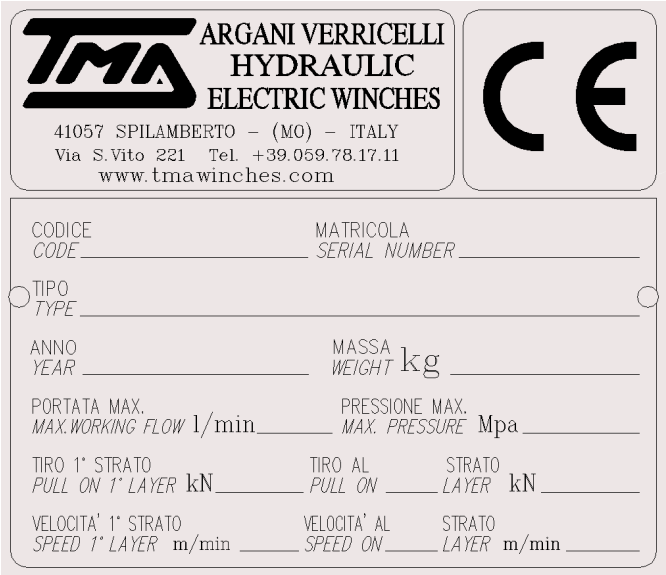

1.2 General description of winch and safety devices

Principal components of *TMA* winches are the following:
Motor: The part delivering the torque driving the load.
Brake: The safety device delivering the torque opposing to the load when the motor is not feeded. The brake acts on the input torque and normally features twice the driving torque. A further safety brake, directly acting on the drum, can be delivered on request.
Reduction gear: The part which do multiply the torque delivered by the motor to obtain the one necessary to drive the load.
Drum: The part which winds the wire. Drum boundaries are the flanges. For safety reasons the diameter of the flanges is equal to the outer diameter of the upper allowed wire layer increased by three wire diameters. Frame: The structure which supports drum and other winch parts.
End stroke devices
(RES 4.1.2.3 of Directive 2006/42 / EC): The safety devices engineered to keep the range of load movements within stated limits. They may be made by revolution counter or sensors.They are provided according to the specific needs of the customer and the type of application.
Wire pressing device: The device engineered to avoid the loosening and the self unwinding from the drum of a slack wire.
Load limiting device: (EN 12077-2)
The safety device engineered to prevent the winch from lifting loads exceeding the allowed maximum or from being subject to abnormal loads. The load limiting device is in house rated by *TMA* before delivery to the maximum allowed load stated on order.
Load control valve (hydraulic winches):
The valve preventing the load lowering speed to exceed the one allowed by the system and to stop winch movements in case of hydraulic pipe breaking. The load control valve is normally directly flanged to the motor.

1.3 General safety instructions

1) Check winch conformity to your needs and applicable rules in force.
2) Make sure that winch fastening system is safe and stiff.
3) Place the winch in a proper position and secure all fixing points with right size bolts correctly tightened.
4) Should the winch be easily accessible by third parties, realize the protections stated by CE rules (Directive 2006/42 / EC).
5) Fill up the drum with the oil quantity needed for a correct lubrication and check oil level.
6) Do not handle wires without accident prevention gloves and never try to move wires under tension.
7) Make sure that wire size and features are compatible with winch ones and check the correct fastening of the wire to the drum.
8) Check the wire winding sense on winch drum for correctness and conformity to the one stated on winch data sheet. The correct winding contributes to extend wire's operational life.
9) Check wire integrity and absence of broken strands or kinks which may cause wire breaking.
10) Check safety device operation and efficacy.
11) Make sure that working conditions do conform to winch features.
12) Never lift loads exceeding maximum stated ones.

1.4 Transport, delivery, supply conditions

Every winch is delivered completely assembled, tested and packed on pallet.
Check product integrity on delivery and immediately notify found damages to the transport company.
For winch handling see attachment n.7 (Pag.28).

SECTION 2

2. INSTALLATION AND OPERATION

2.1 Installation

- *TMA* winches can be installed in any position provided that winch shaft is horizontal and winch fastening is made with existing foundation holes.
For use in different configurations, contact the service TMA.
- Winch foundation shall be flat and stiff to avoid anomalous tensions which could cause the quick wear of internal parts
- Position the winch onto the foundation and check winch foundation feet for perfect sticking to.
Fit opportune shim plates before foundation bolt tightening should any gap be found between foundation and winch feet.
Use grade 8.8 or higher foundation bolts through all existing foundation holes and tighten all bolts with due torque.
- Winch installation shall be such to warrant that the line connecting the middle of the drum to the first wire pulley is perfectly perpendicular to drum shaft.
Small deviations may cause the bad winding of the wire on the drum.
- The distance between winch and first pulley shall be such to warrant the correct fleet angle of installed wire.

WARNING
If the winch is installed in an easily accessible position, it is necessary that the drum and the moving parts are properly protected with relevant protections (2006/42 / EC).It is necessary to agree with TMA upon the supply of such accessories according to the actual needs of the customer.

2.2 Lubrication

- Internal lubrication

As winch internal parts like reduction gears, brakes and bearings are engineered to work in oil bath it is necessary to warrant the correct lubrication of such parts, always keeping the correct lubricating oil level.

-For light working conditions it is allowed the use of good quality hydraulic oils with viscosity able to withstand ambient temperature (in according to ISO 3448 for temperatures between -5 °C ÷ 40 °C viscosity VG32 - VG46, between 40 °C ÷ 65 °C viscosity VG64).

-For heavy working conditions use a specific gear oil having a viscosity able to withstand ambient temperature (in according to ISO 3448 for temperatures between -5 °C ÷ 40 °C viscosity VG100 - VG150, between 40 °C ÷ 65 °C viscosity VG150-220).

-For other ambient conditions consult *TMA*.

WARNING

TMA winches are usually delivered without lubricating oil. Should the winch be delivered with pre fitted wire, the drum will be already filled up with the right quantity of lubrication oil of ISO VG 46 type.

Before running the winch fill up the drum with the lub oil quantity stated on attachment 2 (Pag.28). Such quantity shall fill up half of the drum. Check oil level and fill up an additional oil quantity if necessary.

Lubricating oil temperature shall never exceed 100 °C.

2.3 Fitting of the wire

WARNING

Check drum rotation sense for conformity to the adhesive arrow placed to winch drum.

DANGER

The misrespect of drum rotation sense when fitting the wire may cause load control losses involving danger to people or goods.

WARNING

Winch rotation sense cannot normally be changed by the simple reversion of wire dead end connection position.

We do recommend to call *TMA* technical assistance before carrying out any modification or tampering with the winch.

DANGER

Never fit a wire longer than the maximum allowed to avoid excess wire layers non conforming to safety rules.

Fit wire dead end from inside to outside the drum through the slotted hole made on one drum flange (see pict. 1)

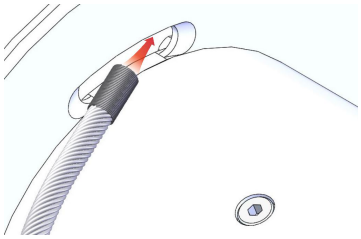

(pict.1)

2.3.1 Fastening with pocket and wedge

The wire dead end shall be fitted in the pocked as to make an eye around the wire wedge with free end fitted backwards through the pocket (see pict.2).

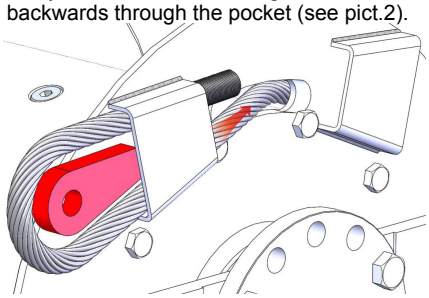

(pict.2)

Pull the wire from the opposite side to press wire and wedge into the pocket (see pict. 3).

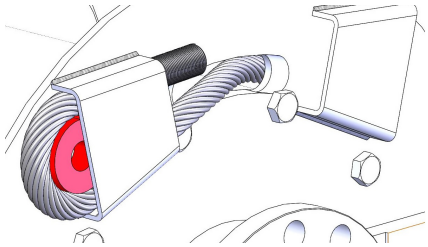

(pict.3)

2.3.2 Fitting with wire clamp

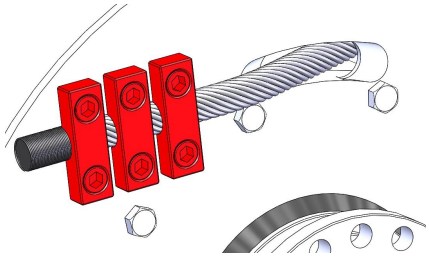

(pict.4)

Fit the wire as shown on pict. 1 and through the wire clamp of drum flange. Tighten wire clamp bolts (see pict. 4).

DANGER

Always keep a minimum of 4 wire coils winded around the drum to warrant a safe winch load holding.

The lone wire dead end fastening is not sufficient to hold the winch load.

DANGER

Make sure that wire clamp bolts don't pass over the flange plate. If it happens, shorten the bolts to avoid rope damage.

WARNING

The first winding of the wire to the drum shall be such to obtain a perfect compactness of the wire coils and leave no space between the coils.

Keep the wire under tension during the first winding operation.

The wire can be easily damaged should it be wedged under load between non compacted under laying coils.

2.4 Hydraulic system: suggestions and instructions

WARNING
Correct function of the winch will depend on the type of hydraulic system it is used with. Make sure that the maximum pressure and flow values of the hydraulic system are compatible with the winch's function characteristics.

TMA hydraulic winches are equipped with a negative multiple disc brake and a load control valve, which is flanged onto the engine.

- Brake
Braking torque is achieved through friction between a series of static discs (connected to the fixed structure) alternated with a series of moving discs (connected to the input shaft) which are pushed against one another due to pressure exerted by a series of springs. The action of the springs may be impeded by a special hydraulically-operated piston. To release the brake a small quantity of oil is taken from the pressure line of the engine circuit and sent to the piston inside the brake assembly (minimum opening pressure 2.6 - 2.8 MPa, maximum tolerable pressure 28 - 30 MPa).
This balances the action of the springs, thereby disengaging the moving brake discs and thus allowing for the free rotation of the engine shaft. When the winch stops the distribution valve lever should be returned to the central position. To engage the brake again, and thus prevent movement, the oil must flow out of the piston, allowing the springs to exert their pressure on the discs. It is vital that the distribution valve spool that controls the engine be shaped in a way that allows the piston to discharge the oil inside, and therefore a spool with an "H" type centre should always be used.
Please refer to the hydraulic drawing (enclosure 6 Pag.28).

DANGER
The use of a closed-centre spool will prevent the oil from flowing out of the piston and will render both the parking brake and load control valve ineffective. This could result in the fall of the load due to emptying of the hydraulic engine through cavitation.

- Load control valve
The load control valve which is normally flanged to the motor does realise the dinamic braking of the load.
It avoids that motor speed will exceed the maximum one allowed by the oil flow. A further scope is to stop load movements should the hydraulic piping be broken.

DANGER
Never reset the load control valve rating.
The load control valve is rated by *TMA* during the factory dynamic bench test which is normally carried out with loads exceeding the maximum nominal one.
The modification of the control valve rating may cause the loss of control of the load.

-Piping
Winch good operation is strictly connected to system correct realisation.
Pipe section shall be dimensioned in function of oil flow and system length. An insufficient pipe section will create pressure drops on the line, consequent working pressure increases in the all system and back pressures on the return line. Such situation may put the winch at risk for poor working condition and possible damage.

WARNING
To avoid winch brake poor working, the pressure necessary to flow the oil through distributor valve and filter (tank line) shall never exceed 0.5 MPa.
In order to obtain a correct operation, the pressure necessary to flow the oil through the winch piping system with by passed winch shall never exceed 1 Mpa.

To connect the winch to the hydraulic supply system refer to the hydraulic diagram and the data sheet provided with the correct dimensionsand positions of the ports of delivery, return and drainage.The internal diameter of the drain pipe shall never be less than¼”.

WARNING
Winch and hydraulic motor will suffer sure damages should the drain line be chocked or clogged.

Safety valve
Always fit a system safety valve rated to a pressure exceeding 10 to 20% of the working pressure value stated on attachment 2 (Pag.28).
The safety valve is normally an integrant component of the distribution valve; should such safety valve be missing than a dedicated one shall be fitted on winch pressure line.

WARNING
Working pressure values stated on *TMA* load diagrams are based on atmospheric return line pressure.

-Filter
Always fit a filter of correct filtering gauge on the hydraulic system to obtain the correct winch working life.
Filtering gauges shall be the following:
10 microns for piston motors 25 microns for orbital motors
The periodical renewal of the filter will give a longer life to all system components.

-Hydraulic oil
Always fill up the hydraulic system with good quality hydraulic oil compatible with system components and ambient temperature.

WARNING
Hydraulic oil working temperature shall never exceed 60° C

2.5 Service conditions

WARNING
TMA winches are built to work in ambient temperatures from -20 °C to +50 °C.
The use of the winch outside above temperature range will be considered unsuitable and not authorized by the maker.
For other conditions see attachment n.2 (Pag 28).

2.6 Start up sequence
- Check lubricating oil fill up.
- Make a few trials without load before fitting the wire to check system correct operation.
- Fit the wire as described above.
- Make a few lifting trials with reduced load to check the correct operation of the end stroke devices
- Make a few lifting trials with winch nominal load and check the correspondance between found pressure values and the ones stated on the *TMA* test sheet.
-Check the correct working of the load limiting device.

SECTION 3

3. MAINTENANCE

3.1 Maintenance operations

TMA winches are engineered to reduce to the bare minimum the maintenance operations. Before any maintenance it is necessary to ensure that the winch can not be accidentally activated during the operations.
It's also compulsory to wear all the suitable personal protective equipment for the relevant operation by evaluating the environmental conditions of the intervention.

WARNING
A complete revision shall be carried out by a *TMA* authorized workshop every 5 years.

Lubricating oil check
Both brake and reduction gear do work in oil bath. Check the winch for possible oil leaks and monthly check oil levels.
Lubrication oil renewal is recommmended every 250 working hours or at least once a year.

WARNING
Old lubricating oils shall be disposed according to applicable rules.

-Wire check
Keep the wire well lubrified by mean of heavy viscosity oils or light greases containing adhesive additives together with graphite, molybdenum bisulfide or sodium triphosphate

DANGER
Always check wire integrity before winch operation.
Fit a suitable new wire should hould the existing one have been squeezed or have broken strands.

- Bolt tightening check
Check periodically the tightening of winch foundation bolts.

3.2 Trouble shooting

PROBLEM	POSSIBLE REASON	SOLUTIONS
Quick load fall	Reverse wire fitting Derated load control valve Erroneous load control valve position Erroneous flow direction	Fit the wire the other way around Contact the technical assistance Fit the valve in the correct position Reverse pipe connection
The load slowly falls continuously	Brake out of order Back pressure to the brake Closed center distributor	Contact the technical assistance Eliminate system back pressure Change distributor spool
The winch does not lift the weight at all	Low pressure Motor failure Locked brake	Change pressure rating Check the drain. Renew the motor Contact the technical assistance
The winch does slowly lift the weighto	Low pressure rating Motor failure Insufficient oil flow Closed brake	Change pressure rating Check the drain. Renew the motor Check pump delivery flow Contact the technical assistance
Generical oil leaks	Damage seals Loose oil plugs	Contact the technical assistance Tighten oil plugs
The winch does not turn without load	Damaged gears Lack of oil flow Lack of system pressure	Contact the technical assistance Check pump delivery flow Check the pump
Excessive noise	Noisy gears Damaged foundation bearings Lack of lubrication oil Oil flow over the admissible Noisy motor	Contact the technical assistance Contact the technical assistance Check oil level in the drum Check pump delivery flow Contact the technical assistance
The wire does not correctly wind on the drum	Excess fleet angle between drum and first pulley Winding of slack wire	Set the fleet angle within acceptable limits (2°) Keep the wire under tension during the
Oil leak from relief plug	Damaged motor seals Damaged brake seals	Change the seals
Winch vibration tendence	Loose foundation bolts	Tighten foundation bolts with due torque

SECTION 4

4. GENERAL ASSEMBLY AND SPARE PARTS LIST

4.1 Drawing assembly

See attachment n.4 (Pag.28).

4.2 Spare part list

See attachment n.5 (Pag.28).

PREAMBULO

En este manual se mencionan tres tipos de instrucciones para la seguridad y otros tantos niveles de riesgo.

"PELIGRO"
Se usa para poner en evidencia situaciones peligrosas para el usuario y, por lo tanto, para prevenir accidentes graves, íncluso mortales.

"CUIDADO"
Se usa para poner en evidencia situaciones peligrosas para la integridad y el rendimiento del cabrestante y, por lo tanto, también para la seguridad y la incolumidad de las personas.

"IMPORTANTE"
Se usa para llamar la atención sobre informaciones importantes que el usuario debe conocer y tomar en nota.

CUIDADO
NO UTILIZAR EL CABRESTANTE ANTES DE HABER LEIDO CON CUIDADO ESTE MANUAL.

PELIGRO
ESTE DISPOSITIVO NO ES DESTINADO PARA INSTALACIONES DE LEVANTAMIENTO O DE DESPLAZAMIENTO DE PERSONAS.

CUIDADO
Leer con cuidado este manual antes de efectuar operaciones de puesta en marcha, de trabajo, de mantenimiento o cualquiera intervención sobre el cabrestante. El mayor número de accidentes de trabajo son debidos a inobservancia de las normas de seguridad y de las precauciones primarias. Por este motivo, muchos accidentes pueden ser evitados conociendo sus causas e interveniendo con cuidado.

CUIDADO
Este manual es una guía para el uso correcto y seguro del cabrestante y para su mantenimiento racional.
La constante observancia de las normas allá contenidas asegura un mejor rendimiento, una buena rentabilidad de trabajo y una larga duración del cabrestante; permite además evitar las comunes causas de accidentes durante el trabajo y el mantenimiento.
Una vez leido, este manual debe ser conservado, íntegro en todas sus partes, cerca del cabrestante, para que sea siempre disponible.
En caso de problemas de comprensión del manual o de algunas de sus partes, recomandamos
ponerse en contacto con *TMA*. Para cualquier tipo de asistencia téncica, ponerse en contacto con *TMA*.

IMPORTANTE
La empresa *TMA* se reserva el derecho de efectuar modificaciones y mejoramientos a sus cabrestantes en cualquier momento y sin previo aviso y no se hace cargo de alguna responsabilidad por cualquier diferencia que pueda encontrarse entre las características del cabrestante y las descripciones del presente manual de empleo y de mantenimiento.

INDICE GENERAL

PREAMBULO..... 13
INDICE GENERAL..... 13
1. CAPITULO PRIMERO. INFORMACIONES
1.1 Datos de identificación: peso y dimensiones..... 14
1.2 Descripción general cabrestante y dispositivos de seguridad..... 14
1.3 Instrucciones generales. Normas de seguridad..... 14
1.4 Transporte y entrega. Condiciones de entrega..... 14
2. CAPITULO SEGUNDO. FUNCIONAMIENTO E INSTALACION
2.1 Instalación..... 14
2.2 Lubrificación..... 15
2.3 Montaggio del cavo..... 15
2.4 Instalación hidráulica: consejos y prescripciones..... 16
2.5 Condiciones de empleo..... 16
2.6 Puesta en marcha..... 16
3. CAPITULO TERCERO. ENTRETENIMIENTO
3.1 Operaciones de entretenimiento..... 17
3.2 Posibles problemas: causas y soluciones..... 17
4. CAPITULO CUARTO. LISTA REPUESTOS Y PLANO DE CONJUNTO
4.1 Plano de conjunto..... 17
4.2 Lista repuestos..... 17

CAPITULO PRIMERO

CUIDADO

Para el uso correcto del cabrestante y un buen funcionamiento duradero, se aconseja leer con cuidado las siguientes notas que permiten conseguir un buen conocimiento del producto.

1. INFORMACIONES

1.1 Datos de identificación, peso y dimensiones

Para los datos de identificación yel peso, ver la placa remachada sobre el cabrestante.
Para las características y las dimensiones, ver el anexo n.1 (Pag.28).

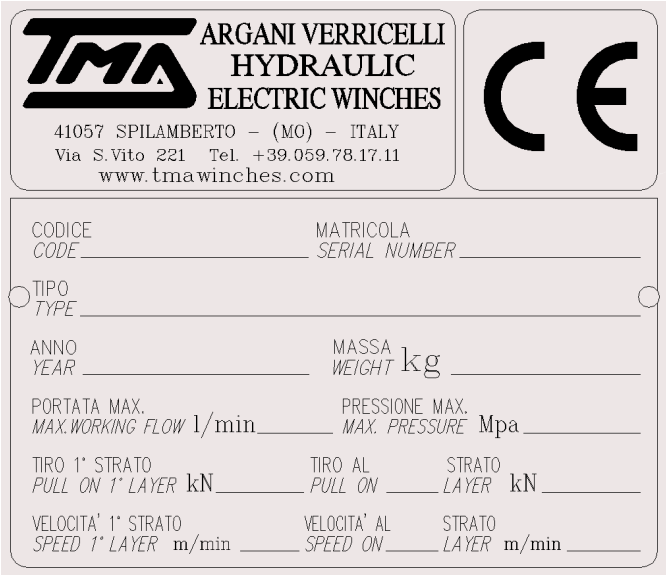

1.2 Descripción general cabrestante y dispositivos de seguridad

Los elementos principales que constituyen los cabrestantes *TMA* son los siguientes:
Motor: es el órgano que ditribuye el par útil para desplazar la carga.
Freno de estacionamiento: dispositivo de seguridad que, creando un par resistente, contrasta el movimiento de la carga. Interviene cuando se corta energía al motor. Actúa sobre el par de entrada y normalmente tiene un valor igual a dos veces el par motor. A pedido, se puede haber un freno de seguridad suplementario que actúa directamente sobre el tambor.
Reductor: dispositivo que multiplica el par suministrado por el motor para conseguir el par necesario al desplazamiento de la carga.
Tambor: elemento que recoge el cable, delimitado por dos bridas. Como elemento de seguridad, el diámetro exterior de las bridas laterales es tres veces superior al diámetro del cable con respecto al diámetro exterior de la última capa útil.
Soporte: estructura que soporta el tambor y los otros elementos constructivos del cabrestante.
Dispositivos de tope
(RES 4.1.2.3 de la Directiva 2006/42/CE): pueden ser de cuentagiros o de detector y sirven para mantener la amplitud de los movimientos de la carga dentro de los limites previstos.
Son obligatorios, pero se montan bajo pedido.
Sujeta-cables: dispositivo que impide que el cable bajo tensión se afloje o se desenrolle sobre el tambor.
Limitador de tracción (EN 12077-2) Dispositivo de seguridad que impide que el cabrestante pueda levantar una carga superior a la máxima admitida o que sea sometido a una carga irregular. *TMA* ajusta previamente el dispositivo sobre el valor de carga máximo admisible mencionado al momento del pedido.

Válvula de control de la carga
(para cabrestanteshidráulicos)
Tiene la función de impedir que la velocidad de desenganche de la carga sea superior a la que puede ser alcanzada por la instalación y de bloquear el movimiento en caso de ruptura de los tubos. Normalmente está conectada al motor por medio de una brida.

1.3 Instrucciones generales para la seguridad

1) Averiguar que el cabrestante sea conforme a sus necesidades y a las normas en vigor.
2) Realizar sobre la máquina un sistema de fijación seguro y rigido.
3) Posicionar correctamente el cabrestante utilizando todos los orificios de fijacion y averiguar que los tornillos de fijación sean idóneos y correctamente apretados.
4) En el caso de que el cabrestante sea facilmente accesible por terceros, realizar las oportunas protecciones según la Directiva máquinas Directiva 2006/42/CE.
5) Introducir en el tambor la cantidad de aceite necesaria para una correcta lubricación y averiguar su nivel.
6) No manejar el cable sin ponerse los guantes protectores y nunca intentar modificar la posición del cable bajo carga.
7) Averiguar que el cable sea correctamente fijado al tambor y que tenga unas características y dimensiones compatibles con las del cabrestante.
8) Averiguar que el sentido de arrollamiento del cable sea correcto y conforrme a lo indicado sobre el cabrestante. Un correcto montaje del cable contribuye acrecer su vida.
9) Averiguar que el cable sea integro y no tenga hilos rotos o pliegues que puedan provocar su ruptura.
10) Averiguar que los dispositivos de seguridad sean funcionantes y eficaces.
11) Averiguar que las condiciones de funcionamiento sean conformes a las características del cabrestante.
12) No efectuar tracciones con cargas superiores a las máximas admitidas.

1.4 Transporte y entrega - Condiciones de entrega

Cada cabrestante se entrega montado, ensayado y adecuadamente embalado sobre pallet.
Al momento de la entrega, controlar que el producto sea integro; en caso de daños, comunicarlo de inmediato al transportista.
Para la movilización del cabrestante vease anexo n.7 (Pag.28).

CAPITULO SEGUNDO

2. INSTALACION Y FUNCIONAMIENTO

2.1 Instalación

- Los cabrestantes *TMA*, si utilizados con eje horizontal, pueden ser montados en cualquier posición, respetando los orificions existentes.
Para su uso en diferentes configuraciones, póngase en contacto con el servicio de TMA.
- Para evitar que en el cabrestante se formen tensiones irregulares que podrían provocar un rápido desgaste de los órganos internos, el soporte sobre el cual será fijado el cabrestante tiene que ser rigido y plano.
- Posicionar el cabrestante sobre la placa y averiguar que los puntos de apoyo estén perfectamente pegados al plano de la placa de soporte.
Si se queda un espacio libre entre los planos de apoyo, introducir arandelas y luego apretar los tornillos de fijación.
Aconsejamos utilizar siempre todos los orificios de fijación previstos y aplicar tornillos con características no inferiores a la clase 8.8 apretandolos con el par correspondiente.
- La posición del cabrestante sobre la placa de fijación debe alcanzar una perpendicularidad perfecta entre el eje del tambor y la línea que une la línea de centro del tambor y la primera polea.
Unas pequeñas desviaciones pueden provocar un arrolliamento irregular del cable sobre el tambor.
- La distancia entre el cabrestante y la primera polea debe permitir el respeto del ángulo de funcionamiento característico del cable

CUIDADO
Si el cabrestante está instalado en una posición tal que sea fácilmente accesible,es necesario que el tambor y las piezas móviles están debidamente protegida con protección relacionada (2006/42/CE). Es necesario ponerse de acuerdo con TMA para la disposición de este tipo de accesorios adjuntos las necesidades reales del cliente.

2.2 Lubricación

- Lubricación interior.Ya que los órganos internos del cabrestante, es decir reductores, cojinetes y frenos, trabajan en baño de aceite, para conseguir un buen funcionamiento se necesita una buena lubricación y el mantenimiento constante del nivel de lubricante correcto.

-En caso de condiciones de funcionamiento ligeras se puede utilizar aceite hidráulico de características buenas con viscosidad compatible con las condiciones ambientales (segun ISO 3448 con temperaturas comprendidas entre -5°C y 40°C viscosidad VG32 - VG46, en ambientes calientes entre 40°C y 65°C viscosidad VG64).
-En caso de condiciones de funcionamiento intensas utilizar un aceite especifico para engranajes con viscosidad adecuada a las condiciones ambientales (segun ISO 3448 con temperaturas comprendidas entre -5°C y 40°C viscosidad VG100 - VG150, en ambientes calientes 40°C y 65°C viscosidad VG150-220).

CUIDADO
Los cabrestantes *TMA* se entregan sin aceite de lubricación. En caso de entrega del cabrestante con cable montado, el tambor ya posee la correcta cantidad de aceite de lubricación del tipo ISO VG 46.
Antes de la puesta en marcha del cabrestante, llenar el tambor introduciendo la cantidad de aceite indicada en el anexo 2 (Pag.28). Esta cantidad es la adecuada para llenar la mitad del tambor. Averiguar el nivel y eventualmente efectuar las correcciones necesarias.
La temperatura del aceite de lubricación no debe superar el valor de 100°C.

2.3 Montaje del cable

CUIDADO
Arrollando el cable, averiguar que el sentido de rotación del tambor sea igual a lo indicado por la flecha de la etiqueta autoadhesivo aplicada sobre el tambor del cabrestante.

PELIGRO
En el caso de que el cable fuese enrollado sobre el tambor en el sentido de rotación incorrecto, esto podría provocar la pérdida de control de la carga con riesgos graves para las personas y las cosas.

CUIDADO
Para invertir el sentido de rotación del tambor, se necesita invertir la posición de fijación del cable. Antes de efectuar modificaciones o intervenciones, se aconseja ponerse en contacto con el servicio posventa *TMA*.

PELIGRO
No montar un cable de longitud superior a la máxima admisible, ya que se formarían capas no conformes a las normas de seguridad.

Introducir el cabo del cable en su ojal, puesto al lado del tambor, desde el interior hacia el exterior (fig.1).

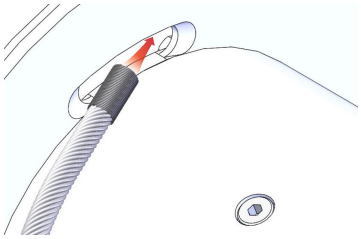

(fig.1)

2.3.1 Montaje con caja de cono y cono

Introducir el cable en la caja de cono realizando un ojal a introducir en el cono (fig.2).

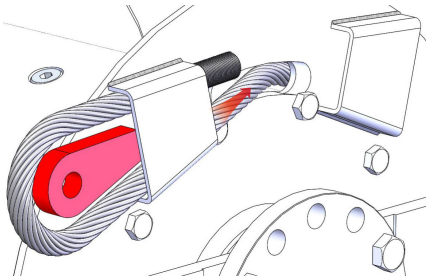

(fig.2)

Tirar el cable desde el lado opuesto para empujar todo en la caja de cono (fig.3).

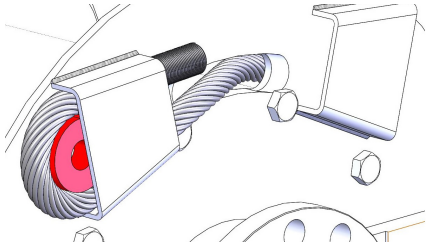

(fig.3)

2.3.2 Montaje con bridas de fijación

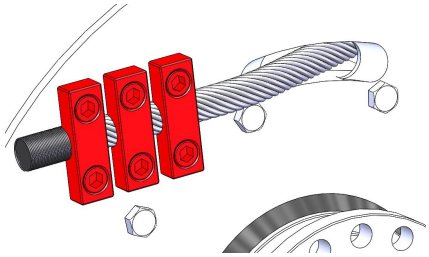

(fig.4)

Introducir el cable como indicado en la fig.1 y luego apretar los tornillos de las bridas (fig.4) para bloquearlo.

PELIGRO
Averiguar que los tornillos de fijación de las bridas del cable no pasen a la chapa. En caso de que eso occurra, cortar los tornillos para que el cable no se dañe

PELIGRO
Para asegurar que la carga esté detenida, dejar siempre por lo menos 4 espiras de cable en el tambor. El sistema de fijación del cable sobre el cabrestante no puede ser considerado una garantía suficiente para la detención de la carga.

CUIDADO
El cable que no haya sido bien compactado puede ser facilmente dañado durante la aplicación de la carga que podría romper las espiras que están debajo

2.4 Instalación hidráulica: sugerencias y prescripciones

CUIDADO

El uso correcto del cabrestante es condicionado a la instalación hidráulica en la que el aparato se encuentra.
Averiguar que los valores característicos de la instalación hidráulica con respecto a la presión y al flujo máximos sean compatibles con las características de funcionamiento del cabrestante.

Los cabrestantes hidráulicos TMA están equipados de un freno multidiscos negativo y de una válvula para el control de la carga, embridada sobre el motor.

- Freno

El par de frenado se obtiene por el rozamiento engendrado entre una serie de discos estáticos (conectados a la estructura fija) y otra de discos móviles (conectados al eje de entrada), comprimidos entre ellos por la fuerza ejercida por un juego de resortes.
La acción de los resortes puede ser contrastada por un pistón accionado de manera hidráulica. Para abrir el freno, se saca una pequeña cantidad de aceite de la línea bajo presión del circuito del motor y se envía al pistón puesto en el interior del cuerpo freno (presión de abertura admisible: mínima 2.6 - 2.8 MPa, máxima 28-30 MPa).
De esta manera se balancea la acción de los resortes y se desbloquean los discos móviles del freno. Así es posible la rotación libre del eje del del motor.
Cuando se para el cabrestante, la palanca de la válvula distribuidora se pone en posición central. Para que el freno pueda volver a cerrarse, bloqueando el movimiento, se necesita que el aceite salga del piston permitiendo a los resortes de ejercer su presión sobre los discos. Es esencial que la bobina de la válvula distribuidora que manda el motor tenga una configuración que permita al pistón de descargar el aceite interior. Se necesita por lo tanto una configuración de la bobina con núcleo en "H". Ver esquema hidráulico en anexo 6 (Pag.28).

PELIGRO

El uso de una bobina con núcleo cerrado impide la salida del aceite del pistón y vuelve ineficaz tanto el freno de aparcamiento como la válvula de control de la carga.
En este caso se podría producir la caída incontrolada de la carga por vaciado del motor hidráulico por cavitación.

- Válvula de control de la carga.

La válvula de control de la carga, normalmente conectada al motor por una brida, tiene la función principal de efectuar un frenado dinámico de la carga. Impide además que la velocidad del motor sea superior a la permitida por el flujo de aceite.Tiene también la función de bloquear el movimiento de la carga, mediante el freno, en caso de ruptura de la tubería de alimentación del motor.

PELIGRO

No modificar el ajuste de la válvula de control de la carga.
TMA ajusta la válvula durante la prueba dinámica al banco.
Normalmente, *TMA* efectúa esta prueba con cargas superiores a la tracción máxima nominal.
Modificar el ajuste de la válvula podría provocar la pérdida de control de la carga.

- Tubería.

La correcta realización de la instalación hidráulica es muy imporante para el buen funcionamiento del cabrestante. Se necesita por lo tanto dimensionar la sección útil de las tuberías según el flujo de aceite y la longitud de la instalación. Una insuficiente sección de los tubos provoca caídas de presión de línea con conseguente aumento de la presión de funcionamiento de toda la instalación y contrapresión en la línea de regreso.
Esto puede llevar a un funcionamiento irregular del cabrestante o también a una avería.

CUIDADO

Para evitar problemas de funcionamiento del cabrestante, la presión necesaria para el flujo de aceite en las tuberías no debe exceder 0.5-1.0 MPa.

Para conectar el cabrestante al sistema hidráulico, consulte la hoja de datos tecnicos y el esquema hidráulico con las dimensiones correctas y las posiciones de las bocas de entrada, devolución y drenaje.
El diámetro interior de este tubo non debe ser inferior de 1/4”.

CUIDADO

En caso de estrechamiento u oclusión en la línea del aceite de retorno el motor y el cabrestante serían seguramente dañados (probables pérdidas de aceite).

- Válvula de seguridad.

Preveer siempre una válvula de seguridad de máxima presión, ajustada con un valor superior de 10-20% con respecto al valor de la presión de trabajo indicada en el anexo 2 (Pag.28).
Normalmente esta válvula es parte integrante de la válvula distribuidora, pero, si no existe, es necesario preveerla en la línea di alimentación del cabrestante..

CUIDADO

Los valores de la presión de funcionamiento indicados en los diagramas de carga *TMA* se refieren al uso con presión de retorno igual a la atmosférica.

- Filtro

Para conseguir una correcta duración del cabrestante, utilizar siempre, en la instalación hidráulica, un filtro de capacidad filtrante adecuada.
Para motores de pistón: 10 micron
Para motores orbitales: 25 micron
Un reemplazo periódico del filtro prolonga la vida de todos los componentes de la instalación.

- Aceite

Para la instalación hidráulica utilizar aceite de buena calidad con características compatibles con los componentes utilizados y las condiciones atmosféricas locales.

CUIDADO

La temperatura del aceite hidráulico de la instalación no debe superar la temperatura de 60 °C.

2.5 Condiciones de empleo

CUIDADO

El cabrestante ha sido construido para un empleo en un campo de temperaturas atmosféricas locales comprendidas entre -20 °C y +50°C. El uso del cabrestante fuera de este campo de temperaturas representa un uso indebido y no autorizado por el constructor.
Para las otras condiciones, ver anexo n.2 (Pag.28).

2.6 Puesta en marcha

- Controlar el nivel del aceite de lubricación.
- Antes de montar el cable, efectuar algunas maniobras en vacío para averiguar el buen funcionamiento de la instalación.
- Montar el cable según las indicaciones anteriores.
- Con carga reducida, efectuar algunos levantamientos y averiguar el correcto funcionamiento de los dispositivos de tope.
- Con carga nominal, efectuar algunas pruebas y averiguar si el valor de la presión de trabajo corresponde a lo indicado en el certificado de prueba *TMA*.

Controlar el limitador de tracción interviene de manera correcta.

CAPITULO TERCERO

3. ENTRETENIMIENTO

3.1 Operaciones de entretenimiento

Los cabrestantes *TMA* han sido proyectados para reducir lo mas posible las intervenciones de entretenimiento.Antes de cualquier operación de mantenimiento es necesario asegurar que el cabrestante no se puede activar accidentalmente durante la operación. Es también necesario utilizar todo el equipo de protección adecuado para la operación relevante y la evaluación de las condiciones ambientales de intervención.

CUIDADO
Cada cinco años el cabrestante debe ser sumetido a una revisión completa en un taller especializado.

- Control del aceite de lubricación
Tanto el freno como los engranajes trabajan en baño de aceite. Averiguar que no se encuentran pérdidas de aceite de lubricación y controlar el nivel una vez por mes. Si necesario, rellenar. Se recomenda el reemplazo del aceite cada 250 horas de funcionamiento o por lo menos una vez por año.

CUIDADO
El aceite reemplazado debe ser eliminado según las normas en vigor.

- Control del cable
Mantener el cable bien lubricado con aceites viscosos o grasas ligeras que contienen aditivos adhesivos con grafito, bisulfuro de molibdeno o trifosfato de sodio.

PELIGRO
Antes de poner en marcha el cabrestante, averiguar siempre que el cable sea integro. Si tiene aplastamientos o hilos rotos, reemplazarlo con un cable nuevo idóneo.

- Control del apretamiento tornillos
Controlar periódicamente el apretamiento de los tornillos que fijan el cabrestante a la estructura.

3.2 Eventuali problemi: cause e soluzioni

PROBLEMA	CAUSA	SOLUCIONES
La carga cae rápidamente.	Cable montado en el sentido contrario. Válvula de control carga desajustada. Posición errónea de la válvula de control carga. Flujo de aceite en dirección errónea	Montar el cable en el sentido correcto. Ponerse en contacto con el servicio post-venta. Montar la válvula en posición correcta. Invertir la posición de los tubos de alimentación y de retorno.
La carga baja despacio y continuamente	Freno ineficaz. Contrapresión en el freno. Válvula distribuidora de centro cerrado.	Ponerse en contacto con el servicio post-venta. Eliminar las contrapresiones en la instalación. Reemplazar la bobina
El cabrestante levanta la carga despacio	Motor dañado. Flujo insuficiente. Freno no abierto.	Control aceite de retorno. Reemplazar el motor. Controlar el flujo de la bomba. Ponerse en contacto con el servicio post-venta.
El cabrestante levanta la carga despacio	Motor dañado. Flujo insuficiente. Freno no abierto.	Modificar el ajuste. Control aceite de retorno. Reemplazar el motor. Controlar el flujo de la bomba. Ponerse en contacto con el servicio post-venta.
Pérdida de aceite genérico	Juntas estropeadas. Tapones aflojados.	Ponerse en contacto con el servicio post-venta. Cerrar los tapones de llenado de aceite..
El cabrestante en vacío no gira	Engranajes estropeados. Falta de flujo. Presión instalación inexistente.	Ponerse en contacto con el servicio post-venta. Controlar el flujo de la bomba. Controlar la bomba.
Ruidos demasiado elevados.	Engranajes ruidosos. Cojinetes de cigüeñal estropeados. Falta de aceite de lubricación. Flujo de aceite superior a lo admitido. Motor ruidoso.	Ponerse en contacto con el servicio post-venta. Ponerse en contacto con el servicio post-venta. Controlar el nivel de aceite en el tambor. Controlar el flujo de la bomba. Ponerse en contacto con el servicio post-venta
El cable no se arrolla correctamene sobre el tambor	Angulo de desviación entre polea (o tranmisión) y tambor demasiado elevado. El cable no está bajo tensión durante el arrollamiento	Volver a poner el ángulo de desviación entre los límites aceptables (2°). Poner el cable bajo tensión durante el arrollamiento.
Pèrdida de aceite tapon respiradero	Juntas del motor estropeadas. Juntas del freno ineficaz	Cambiar las juntas
El cabrestante tiende a vibrar	Tornillos de fijación aflojados.	Apretar los tornillos de fijación con el par adecuado

CAPITULO CUARTO

4. LISTA REPUESTOS Y PLANO DE CONJUNTO

4.1 Plano de conjunto

Ver anexo n.4 (Pag.28).

4.2 Lista repuestos

Ver anexo n.5 (Pag.28).

PREFACE

Dans cette notice, on utilise trois types d'avertissements pour la sécurité qui mettent en évidence différents niveaux de risque.

"DANGER"
Il est utilisé pour mettre en évidence des situations dangereuses pour l'opérateur et, par conséquent, pour prévenir des accidents graves ou mortels.

"ATTENTION"
Il est utilisé pour mettre en évidence des situations dangereuses pour l'intégrité et le rendement du treuil pouvant également concerner la sécurité des personnes

"IMPORTANT"
Il est utilisé pour attirer l'attention sur des informations importantes que l'opérateur doit connaître et dont il doit tenir compte.

ATTENTION
AVANT D'UTILISER LE TREUIL, LIRE ATTENTIVEMENT CETTE NOTICE.

DANGER
ICET APPAREIL N'EST PAS DESTINE A INSTALLATIONS DE LEVAGE OU DE DEPLACEMENT DE PERSONNES.

ATTENTION
Avant de procéder aux opérations de démarrage, de travail, d'entretien ou avant d'effectuer n'importe quelle intervention sur le treuil, veuillez lire attentivement cette notice. La plupart des accidents qui se produisent pendant le travail sont dûs à l'inobservance des normes de sécurité et des précautions les plus simples. Pour ce motif, plusieurs accidents peuvent être évités en connaissant les causes et en procédant avec beaucoup d'attention.

ATTENTION
Cette notice est une introduction à l'emploi correct et sûr du treuil et à son entretien rationelle. Le respect constant des normes y contenues assure de bonnes performances, une bonne rentabilité et une longue vie du treuil, en évitant les accidents les plus communs pouvant se produire pendant le travail ou l'entretien.Une fois lue, cette notice doit être maintenue intacte dans toutes ses parties, à proximité du treuil, pour qu'elle soit toujours disponible. Au cas où cette notice ou quelques parties de celle-ci ne soit pas compréhensible, veuillez contacter la société TMA. Pour tout genre d'assistance technique, veuillez vous adresser à la société TMA

IMPORTANT
TMA se réserve le droit d'effectuer, sans préavis, des modifications et des améliorations à ses treuils et ne répond pas de différences existantes entre les caractéristiques du treuil et les descriptions de cette notice.

INDEX GENERAL

18.....	PREFACE
18.....	INDEX GENERAL
	1. PREMIER CHAPITRE. INFORMATIONS
19.....	1.1 Données d'identification: poids et dimensions
19.....	1.2 Description général treuil et dispositifs de sécurité
19.....	1.3 Instructions générales. Normes de sécurité
19.....	1.4 Transport et livraison. Conditions de livraison
	2. DEUXIEME CHAPITRE. FONCTIONNEMENT ET INSTALLATION
19.....	2.1 Installation
20.....	2.2 Lubrification
20.....	2.3 Montage du câble
21.....	2.4 Installations hydrauliques: conseils et prescriptions
21.....	2.5 Conditions d'emploi
21.....	2.6 Mise en service
	3. TROISIEME CHAPITRE. ENTRETIEN
22.....	3.1 Opérations d'entretien
22.....	3.2 Problèmes éventuels: causes et solution
	4. QUATRIEME CHAPITRE. LISTE PIECES DETACHEES ET VUE D'ENSEMBLE
22.....	4.1 Vue d'ensemble
22.....	4.2 Liste pièces détachées

PREMIER CHAPITRE

ATTENTION

Pour un emploi correct du treuil et pour le bon fonctionnement dans le temps, on conseille de lire attentivement les notes suivantes pour acquérir une bonne connaissance du produit.

1. INFORMATIONS

1.1 Données d'identification, poids et dimensions

Pour les données d'identification et le poids, voir la plaquette fixée, à l'aide de rivets, sur le treuil.
Pour les caractéristiques et les dimensions, voir annexe n.1 (Pag.28).

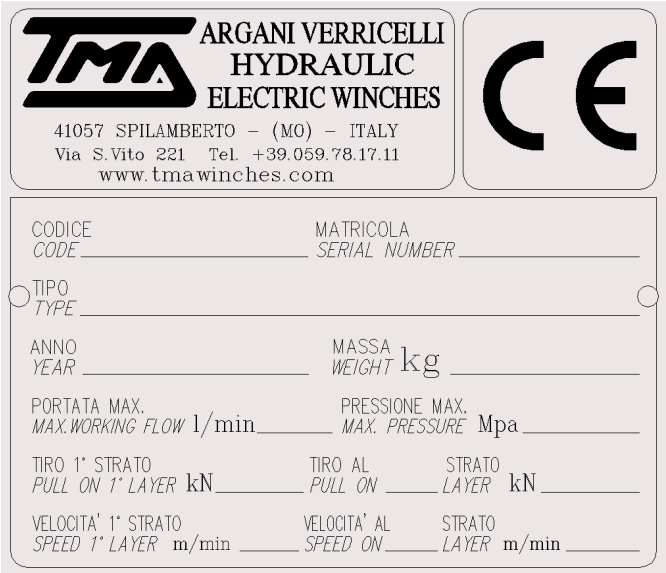

1.2 Description générale treuil et dispositifs de sécurité

Les éléments principaux qui constituent les treuils TMA sont:
Moteur: organe qui donne le couple nécessaire à déplacer la charge.
Frein de stationnement: il s'agît du dispositif de sécurité qui, en créant un couple resistant, s'oppose au mouvement de la charge. Il intervient lorsqu'on coupe l'énergie du moteur. Il agit sur le couple à l'entrée et, normalement, il a une valeur deux fois supérieure au couple-moteur. Sur demande, on peut livrer un frein de sûreté supplementaire agissant directement sur le tambour.
Réducteur: dispositif qui multiplie le couple distribué par le moteur pour obtenir le couple nécessaire au déplacement de la charge.
Tambour: il s'agît de l'élément d'enroulement du câble. Il est délimité par deux brides. En qualité d'élément de sécurité, le diamètre extérieur des brides latérales dépasse de trois fois le diamètre du câble par rapport au diamètre extérieur de la dernière couche utile.
Support: structure qui supporte le tambour et les autres éléments constituant le treuil.
Dispositifs de fin de course
(RES 4.1.2.3 de la Directiva 2006/42/CE):
Ils peuvent être à compte-tours ou à capteur et ils servent à maintenir l'amplitude des mouvements de la charge dans les limites prévues.
Están provistos de acuerdo a las necesidades específicas del cliente y el tipo de aplicación.
Presse-câble: il s'agît du dispositif qui empêche que le câble sans tension se détend ou se déroule sur le tambour.
Limiteur de traction (EN 12077-2)
Il s'agît d'un dispositif de sûreté qui empêche que le treuil puisse soulever une charge supérieure à la valeur maxi. admise ou qu'il soit soumis à une charge anomale. Le dispositif est préalablement reglé par TMA pour la valeur de la charge maxi. admise, indiquée dans la commande.
Soupape de côntrole de la charge (pour treuils hydrauliques)
Ella a la fonction d'empêcher que la vitesse de relâchement de la charge soit supérieure à celle qui peut être obtenue par l'installation et de bloquer le mouvement en cas de rupture des tuyaux. Elle connectée au moteur d'une façon normale.

1.3 Indications générales pour la sécurité

1) Vérifier que le treuil soit conforme à vos besoins et aux normes en vigueur.
2) Réaliser sur la machine un système de fixation sûr et rigide.
3) Positionner le treuil d'une façon correcte, en utilisant tous les trous de fixation et en s'assurant que les vis de fixation soient appropriées et correctement serrées.
4) Au cas où le treuil soit facilement accessible à tiers, réaliser des protections comme d'après le Directiva 2006/42/CE
5) Introduire dans le tambour la quantité d'huile nécessaire à une lubrification correcte et en vérifier le niveau.
6) Ne pas manier le câble sans les gants de protection et ne pas essayer de modifier la position du câble sous charge.
7) Vérifier que le câble soit correctement ancré au tambour et qu'il ait les caractéristiques et les dimensions compatibles à celles du treuil.
8) Vérifier que le sens d'enroulement du câble soit correct et conforme à celui indiqué sur le treuil.
Un montage correct du câble contribue à en augmenter la vie.
9) Vérifier que le câble soit intact et qu'il ne présente pas de fils cassés ou de plis pouvant en provoquer la rupture.
10) Vérifier que les dispositifs de sûreté fonctionnent bien et soient efficaces.
11) Vérifier que les conditions de fonctionnement correspondent aux caractéristiques du treuil.
12) N'effectuer pas de tractions avec charges supérieures à celles maximales admises.

1.4 Transport et livraison - conditions de livraison

Chaque treuil est livré monté, essayé et adéquatement emballé sur pallette.
Lors de la livraison, côntroler que le produit soit intact; en cas de dommages, le communiquer immédiatement au transporteur.
Voir l'annexe 7 (Pag.28) pour la manutention du treuil.

DEUXIEME CHAPITRE

2. INSTALLATION ET FONCTIONNEMENT

2.1 Installation

- Les treuils TMA utilisés l'axe horizontal peuvent être montés dans n'importe quelle position, à condition que les percements existants soient respectés.
Pour l'emploi avec axe vertical, contacter le service après-vente TMA.
- Pour éviter que des tensions anomales se produisent dans le treuil, tensions qui pourraient provoquer une usure rapide des organes internes, il est nécessaire que le support, sur lequel le treuil est fixé, soit rigide et plat.
- Positionner le treuil sur la plaque et vérifier que les points d'appui adhèrent parfaitement au plan de la plaque du support.
Au cas où une lumière reste entre les plans d'appui, insérer des cales et, ensuite, serrer les vis de fixation.
Nous conseillons d'utiliser tous les trous de fixation prévus et des vis ayant des caractéristiques non inférieures à la classe 8.8, en les serrant avec un couple approprié.
- La position du treuil sur la plaque d'ancrage doit permettre d'obtenir une perpendicularité parfaite entre l'axe du tambour et la ligne reliant la ligne médiane du tambour et la première poulie.
De petites déviations peuvent provoquer l'enroulement erroné du câble sur le tambour.
- La distance entre le treuil et la première poulie doit être telle que l'angle de fonctionnement caractéristique du câble soit respecté

ATTENTION
Si le treuil est installé dans une position telle qu'il soit facilement accessible, il est nécessaire que le tambour et les parties mobiles sont bien protégé avec les protections connexes (2006/42/CE). Se doit convenir avec TMA toute disposition de ces pièces jointes les besoins réels du client.

2.2 Lubrification

- Lubrification interne.
Etant donné que les organes intérieurs du treuil - soit réducteurs, roulements et freins - travaillent en bain d'huile, pour un bon fonctionnement, il est nécessaire d'en assurer une lubrification appropriée, en maintenant toujours le juste niveau de lubrifiant.
- Pour des conditions d'emploi legères, utiliser une huile hydraulique ayant des caractéristiques optimales et une viscosité compatible avec les conditions d'emploi et les conditions ambiantes (ISO 3448 en ambiants tempérés -5 °C - 40 °C viscosité VG32 - VG46, en ambiants chauds 40 °C - 65 °C viscosité VG64).
- Pour des conditions d'emploi difficiles utiliser une huile spécifique pour engrenages ayant une viscosité conforme à la température et aux conditions de travail ambiantes (ISO 3448 en ambiants tempérés -5 °C - 40 °C viscosité VG100 - VG150, en ambiants chauds 40 °C - 65 °C viscosité VG150-220).
Pour températures inferieures à -20 °C contacter TMA.

ATTENTION
Les treuils TMA sont livrés sans huile de lubrification.
Avant de mettre le treuil en service, remplir le tambour en introduisant la quantité d'huile indiquée dans l'annexe n.2 (Pag.28).
Cette quantité remplit la moitié du tambour. Vérifier le niveau et, le cas écheant, effectuer les corrections nécessaires.
La température de l'huile de lubrification ne doit pas dépasser la valeur de 100°C.
Si le treuil est livré le câble monté, le tambour contient déjà la quantité d'huile de lubrification (type ISO VG 46) appropriée

2.3 Montage du câble

ATTENTION
En enroulant le câble, vérifier que le sens de rotation soit celui indiqué par la flèche de l'étiquette autocollante appliquée sur le tambour du treuil.

DANGER
Au cas où le câble soit enroulé sur le tambour sans respecter le sens de rotation correct, on pourrait perdre le côntrole de la charge, ce qui provoquerait de gros risques pour les personnes et les choses.

ATTENTION
Pour inverser les sens de rotation du tambour, il ne suffit pas d'inverser la position d'attelage du câble. Avant de procéder à modifications ou à interventions, on conseille donc de contacter le service après-vente TMA.

DANGER
Ne pas monter un câble de longueur supérieure à la valeur maximale admise, car on obtiendrait des couches non conformes aux normes de sécurité.

Introduire l'extrémité du câble dans la fente correspondante, placée sur un côté du tambour, de l'intérieur vers l'extérieur (fig.1).

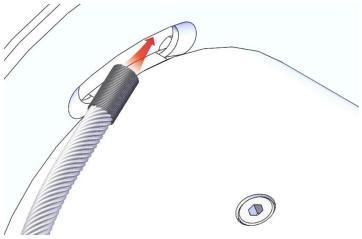

(fig.1)

2.3.1 Montage avec boîte à cône et cône

Le câble doit être mis dans la boîte à cône, en formant un oeillet où le coin doit être introduit (fig.2).

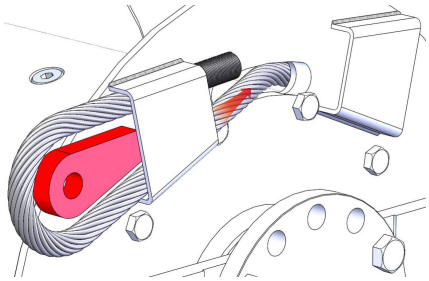

(fig.2)

Tirer le câble du côté opposé pour introduire l'ensemble dans la boîte à cône (fig.3).

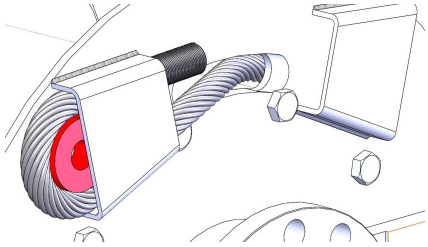

(fig.3)

2.3.2 Montage avec brides de blocage

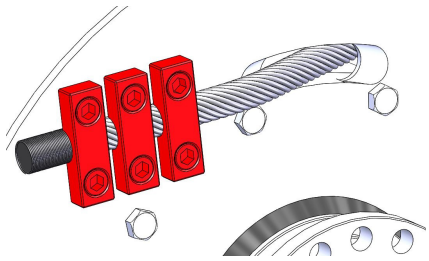

(fig.4)

Serrer les vis des brides de blocage (fig.4) de telle sorte que le câble, une fois introduit comme d'après la figure 1, soit bloqué

DANGER
Verifier que le vis de fixation ne passent pas, au dehors de l'epaisseurde la flasque; en ce cas, il faut reduire les vis pour eviter que le cable se casse.

DANGER
Sur le tambour, il faut toujours laisser au moins 4 spires de câble enroulées, pour que la charge soit retenue.
Le système de fixation du câble présent sur le treuil n'est pas considéré une garantie suffisante pour la retenue de la charge.

ATTENTION
Lors du premier montage, il faut compacter parfaitement le câble sur le tambour sans laisser des éspaces entre les spires. Enrouler le câble en le soumettant à une tension appropriée.
Le câble qui n'a pas été bien compacté risque d'être facilement abîmé, car, sous l'effet de la charge, les spires pourraient s'endommager.

2.4 Installation hydraulique: conseils et prescriptions

ATTENTION

Le fonctionnement correct du treuil est lié à l'installation hydraulique dans laquelle l'appareil est introduit.
Vérifier que les valeurs caractéristiques de l'installation hydraulique concernant la pression et le flux maxi. soient compatibles avec les caractéristiques de fonctionnement du treuil.

Les treuils hydrauliques TMA sont doués d'un frein multidisques négatif et d'une soupape pour le côntrole de la charge, bridée au moteur.

- Frein

Le couple de freinage s'obtient du frottement qui se produit entre une série de disques statiques (connectés à la structure fixe) et une autre de disque mobiles (connectés à l'arbre d'entrée) pressés entre eux par la force excercée d'un jeu de ressorts. Un piston actionné hydrauliquement peut s'opposer à l'action des ressorts.
Pour ouvrir le frein, une petite quantité d'huile est prélevée de la ligne sous pression du circuit du moteur et envoyée au piston placé à l'intérieur du corps de frein
(pression d'ouverture admise: mini. 2.6 - 2.8 MPa, maxi. 28 - 30 MPa).
De cette façon, l'action des ressort s'équilibre et les disques mobiles du frein se désengagent. Il est ainsi possible la libre rotation de l'arbre du moteur.
Lorsque le treuil s'arrête, le levier de la valve distributrice passe en position centrale. Pour que le frein puisse se renfermer en arrêtant le mouvement, il faut que l'huile sorte du piston, en permettant aux ressorts d'exercer une pression sur les disques.
Il est essentiel que la bobine de la valve distributrice qui commande le moteur ait une configuration permettant au piston de décharger l'huile interne. Une configuration de la bobine à noyau en "H" est donc nécessaire. Voir schéma hydraulique dans l'annexe 6 (Pag.28).

DANGER

L'emploi d'une bobine à centre fermé empêche l'ecoulement de l'huile du piston et rend inefficace tant le frein de parking que la soupape de contrôle de la charge. En ce cas, une chute incôntrolée de la charge suite à la vidange du moteur hydraulique par cavitation pourrait se produire.

- Soupape de côntrole de la charge.

La soupape de côntrole de la charge, normalement connectée au moteur, a la fonction principale d'effectuer un freinage dynamique de la charge. Elle empêche que la vitesse du moteur soit supérieure à celle admise par le flux de l'huile. Elle a également la fonction de bloquer le mouvement de la charge, par l'action du frein, en cas de rupture de la canalisation d'alimentation du moteur.

DANGER

Ne pas modifier le réglage de la soupape de côntrole de la charge. La soupape est réglée par TMA lors de l'essai dynamique efectué sur le banc d'essai.L'essai est normalement effectué par TMA avec des charges supérieures à la traction nominale maximale.Le fait de modifier le réglage de la soupape pourrait provoquer la perte de côntrole de la charge.

- Canalisation

La réalisation correcte de l'installation hydraulique est fondamentale pour le bon fonctionnement de l'installation. Il faut donc dimensionner la section utile des canalisations, en la proportionnant au flux d'huile et à la longueur de l'installation. Une section insuffisante des tuyaux cause des chutes de pression de ligne ainsi que l'augmentation conséquente de la pression de fonctionnement de l'installation complète et une contrepression sur la ligne de retour, ce qui pourrait provoquer un fonctionnement mauvais du treuil ou même son endommagement.

ATTENTION

Pour éviter des problèmes de fonctionnement du treuil, la pression nécessaire à l'écoulement de l'huile dans les canalisations ne doit pas dépasser 0.5-1.0 MPa.

Pour connecter le treuil au système hydraulique, il faut faire référent le schéma hydraulique et la feuille de données fourni avec les dimensions correctes et les positions de la bouche de la entrée, le retour et le drainage.
Le diamètre interne de ce tuyau ne doit pas être inférieur à 1/4".

ATTENTION

En cas de rétrécissement ou d'occlusion dans la ligne de l'huile en retour, des dommages au moteur ou au treuil avec probables pertes d'huile se produiraient.

- Soupape de sûreté.

Prévoir toujours une soupape de sûreté, réglée sur une valeur supérieure à 10-20% par rapport à la valeur de la pression d'exercice indiquée dans l'annexe 2 (Pag.28).
Cette soupape fait normalement partie de la valve distributrice mais, au cas où elle ne soit pas présente, il faut la prévoir dans la ligne d'alimentation du treuil.

ATTENTION

Les valeurs de pression de fonctionnement indiquées sur les diagrammes de charge TMA se rapportent à l'emploi avec une pression de retour pareille à celle atmosphérique.

- Filtre

Pour que le treuil ait une durée correcte, utiliser toujours, sur l'installation hydraulique, un filtre ayant une capacité de filtrage approprié.
Pour moteurs à pistons: 10 micron.
Pour moteurs orbitaux: 25 micron.
Un remplacement périodique du filtre prolonge la vie de tous les composants de l'installation.

- Huile

Pour l'installation hydraulique, utiliser une huile de bonne qualité, ayant des caractéristiques compatibles avec les composants utilisés et les conditions ambiantes.

ATTENTION

La température de l'huile hydraulique de l'installation ne doit pas dépasser la température de 60 °C.

2.5 Conditions d'emploi

ATTENTION

Le treuil a été conçu pour un emploi dans un champ de températures ambiantes compris entre -20 °C et +50°C.
Le fait d'utiliser le treuil au dehors de ce champ de températures représente un emploi impropre et non autorisé par le constructeur. Pour les autres conditions, voir annexe n.2 (Pag.28).

2.6 Mise en service

- Vérifier le remplissage de l'huile de lubrification.
- Avant de monter le câble, effectuer quelques mouvements à vide pour vérifier le bon fonctionnement de l'installation.
- Monter le câble selon les indications précédentes.
- La charge réduite, effectuer quelques levages et vérifier le bon fonctionnement des dispositifs de fin de course.
- La charge nominale, effectuer quelques essais et vérifier la correspondance entre la valeur de la pression d'exercise et celle indiquée dans la fiche d'essai TMA.

Vérifier si le limiteur de traction intervient correctement.

TROISIEME CHAPITRE

3. ENTRETIEN

3.1 Opération d'entretien

Les treuils TMA ont été projetés de telle sorte à réduire au minimum les opérations d'entretien.Vor jeder Wartung ist es notwendig sicherzustellen, dass die Winde während der Operationen nicht versehentlich aktiviert werden. Es ist auch erforderlich, alle geeignete persönliche Schutzausrüstung für das jeweilige Geschäft laut der Bewertung der Umweltbedingungen der Intervention zu tragen.

ATTENTION
Tous les cinq ans, le treuil doit être soumis à une révision complète auprès d'une usine spécialisée.

- Côntrole de l'huile de lubrification
Tant le frein que les engrenages travaillent en bain d'huile. Vérifier qu'aucune perte d'huile de lubrification soit présente et en côntroler, une fois par mois, le niveau. Procéder éventuellement au rétablissement. On recommande de remplacer l'huile après 250 heures de fonctionnement ou, au moins, une fois par an.

ATTENTION
L'huile remplacée doit être évacuée selon les normes en vigueur.

- Côntrole du câble
Maintenir le câble bien lubrifié à l'aide d'huiles très visqueuses ou de graisses légères contenant des additifs adhésifs avec graphite, bisulfure de molybdène ou triphosphate de sodium.

DANGER
Avant de mettre en service le treuil, vérifier toujours que le câble soit intact. S'il ya des aplatissements ou des fils cassés, le remplacer par un câble nouveau approprié.

- Côntrole du serrage vis
Vérifier périodiquement le serrage des vis qui fixent le treuil à la structure.

3.2 Problèmes éventuelles: causes et solutions

PROBLEME	CAUSE	SOLUTION
La charge tombe vite	Câble monté dans le sens contraire Valvola di controllo carico starata Soupape de côntrole charge non réglée Flux d'huile en direction erronée	Monter le câble dans le sens correct Contacter le service après-vente Monter la soupape en position correcte Inverser la position des tuyaux d'alimentation et de retour
La charge descend lentement d'une façon continuelentamente in continuo	Frein insuffisant Contrepression dans le frein Valve distributrice à centre fermé	Contacter le service après-vente Eliminer les contrepressions présentes dans l'installation Remplacer la bobine
Le treuil ne lève pas la charge	Réglage bas Moteur endommagé Frein bloqué	Modifier le réglage Côntroler l'huile en retour. Remplacer le moteur Contacter le service après-vente
Le treuil lève lentement la charge	Réglage bas Moteur endommagé Flux insuffisant Frein non ouvert	Modifier le réglage Côntroler l'huile en retour. Remplacer le moteur Côntroler le flux de la pompe. Contacter le service après-vente
Perte d'huile générique	Joints abîmés Bouchons desesserés	Contacter le service après-vente Serrer les buchons de remplissage d'huile
Le treuil à vide ne tourne pa	Engrenages abîmés Manque de flux Pression installation inexistante	Contacter le service après-vente. Côntroler le flux de la pompe Côntroler la pompe
Bruit trop élevé	Engrenages bruyants Paliers principaux endommagés Manque d'huile de lubrification Flux d'huile de quantité supérieure à celle admise Moteur bruyant	Contacter le service après-vente Contacter le service après-vente Côntroler le niveau d'huile dans le tambour Côntroler le flux de la pompe Contacter le service après-vente
Le câble ne s'enroule pas correctement autour du tambour	Angle de déviation entre poulie (ou transmission) et tambour trop élevé Le câble n'est pas sous tension lors de l'enroulement	Ramener l'angle de déviation entre des limites acceptables (2°) Pendant l'enroulement, mettre le câble sous tension
Perte d'huile de le bouchon de sécurité	Joints du moteur abîmés Joints du frein abîmés	Changer les joints
Le treuil tend à vibrer	Vis de fixation desesserées	Serrer les vis de fixation avec le couple approprié

QUATRIEME CHAPITRE

4. LISTE PIECES DETACHEES ET VUE D'ENSEMBLE

4.1 Vue d'ensemble

Voir annexe n°4 (Pag.28).

4.2 Liste pièces détachées

Voir annexe n°5 (Pag.28).

VORWORT

In diesem Handbuch sind drei Warnungszeichen für die Sicherheit erwähnt, die ebensoviele Gefahrniveaus darstellen.

"GEFAHR"
Wird verwendet, um gefährliche Situationen dem Bediener zu melden und daher schwere -auch lebensgefährliche -Unfälle zu verhindern.

"ACHTUNG"
Wird verwendet, um schädliche Situationen, die zur Beschädigung der Winde und demzufolgen zu Verletzungen der Personen führen können, hervorzuheben

"WICHTIG"
Wird verwendet, um die Aufmerksamkeit auf wichtige Hinweise, die der Bediener zu kennen und zu berücksichtigen hat, zu lenken.

ACHTUNG
WINDE NICHT IN BETRIEB SETZEN, BEVOR SIE DIESES HANDBUCH SORGFÄLTIG GELESEN HABEN.

GEFAHR
DIESE VORRICHTUNG IST NICHT FÜR HEBE- UND FÖRDERZEUGE FÜR PERSONEN GEEIGNET.

ACHTUNG
Vor den Inbetriebnahme-, Wartungs- und Reparaturarbeiten an der Winde ist dieses Handbuch sorgfältig zu lesen. Die meisten Arbeitsunfälle sind der Nichteinhaltung der einfachsten Sicherheitsvorschriften und Vorsichtsmaßnahmen zuzuschreiben. Aus diesem Grund können viele Unfälle durch die Erkennung der Ursachen und ein vorsichtiges Vorgehen vehindert werden.

ACHTUNG
Dieses Handbuch ist ein Wegweiser für eine bestimmungsgemäße und sichere Verwendung der Winde sowie für seine rationelle Wartung. Die beständige Einhaltung der hier erwähnten Normen versichert den besten Wirkungsgrad, einen ökonomischen Betrieb sowie eine lange Lebensdauer der Winde und verhütet die bei der Arbeit und Wartung gewöhnlichsten Unfallursachen.Nach der Lesung des Handbuches, ist dieses in der Nähe der Winde in seiner vollständiger Ausgabe so zu bewahren, daß es stets verfügbar ist. Sollten Verständnisprobleme aus diesem Handbuch oder dessen Teilen entstehen, so bitten wir Sie mit TMA Kontakt aufzunehmen.
Für jede technische Beratung steht Ihnen TMA gerne zur Verfügung..

WICHTIG
TMA behält sich vor, Änderungen und Verbesserungen an ihren Winden jederzeit ohne vorherige Benachrichtung auszuführen, und übernimmt keine Verantwortung für irgendwelchen Unterschied zwischen den Eigenschaften der Winde und den Beschreibungen dieser Betriebs- und Wartungsanweisungen .

INHALTSVERZEICHNIS

VORWORT..... 23
INHALTSVERZEICHNIS..... 23
1. ABSCHNITT. INFORMATIONEN
1.1 Kenndaten: Gewicht und Abmessungen..... 24
1.2 Allgemeine Beschreibung Winde und Sicherheitsvorrichtungen..... 24
1.3 Allgemeine Anweisungen Sicherheitsvorschriften..... 24
1.4 Transport und Lieferung. Lieferbedingungen..... 24
2. ABSCHNITT. BETRIEB UND ANBAU
2.1 Anbau..... 24
2.2 Schmierung..... 25
2.3 Montage des Seils..... 25
2.4 Hydraulik: Tips und Vorschriften..... 26
2.5 Betriebsbedingungen..... 26
2.6 Inbetriebnahme..... 26
3. ABSCHNITT. WARTUNG
3.1 Wartungsarbeitene..... 27
3.2 Mögliche Probleme: Ursachen und Abhilfen..... 27
4. ABSCHNITT. ERSATZTEILLISTE UND GESAMTZEICHNUNG
4.1 Gesamtzeichnung..... 27
4.2 Ersatzteilliste..... 27

1. ABSCHNITT

ACHTUNG
Für einen einwandfreien Einsatz der Winde empfiehlt es sich nachstehende Hinweise, die eine gute Kenntnis des Produkts ermöglichen, sorgfältig zu lesen.

1. HINWEISE

1.1 Kenndaten, Gewichtt und Abmessungen

Für die Kenndaten und das Gewicht siehe Typschild an der Winde.
Für die Eigenschaften und Abmessungen sehen Anlage n.1(Seite 28).

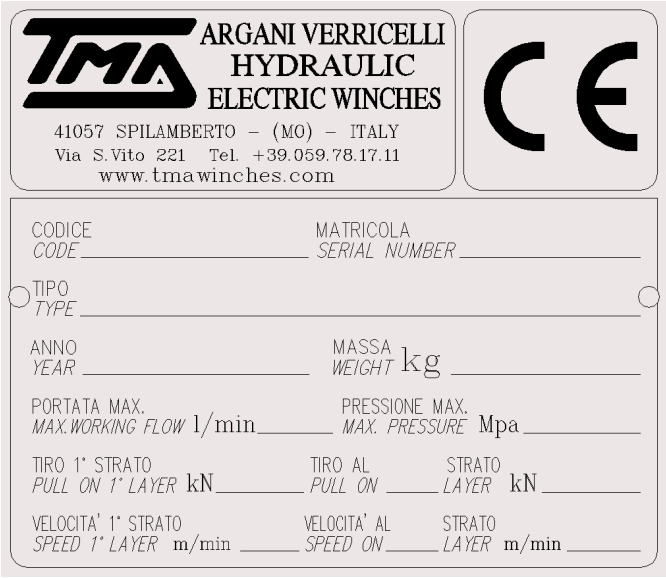

1.2 Allgemeine Beschreibung der Winde und Sicherheitsvorrichtungen

Die Bestandteile der TMA-Winden sind folgende:
Motor: Organ, das das Nutzmoment zum Lasttransport abgibt.
Feststellbremse: Es handelt sich um die Sicherheitsvorrichtung, die durch ein Gegenmoment den Lasttrasnport verhindert. Sie schaltet ein, wenn Energie am Motor abgenommen wird. Sie wirkt auf das Eingangsdrehmoment und hat in der Regel einen Wert, der zweilmal das Antriebsdrehmoment ist. Auf Wunsch kann
eine zusätzliche Sicherheitsbremse montiert werden, die unmittelbar auf den Trommel wirkt.
Getriebe: Vorrichtung, die das vom Motor abgegebene Moment übersetzt, um das für den Lasttransport notwendige Moment zu erzielen.
Trommel: Es handelt sich um einen Bestandteil, der zur Aufnahme des Seils dient und von zwei Flanschen abgegrenzt ist. Als Sicherheitsteil ist der Aussendurchmesser der Seitenflansche dreimal höher als der Seildurchmesser im Vergleich zum Aussendurchmesser der letzten Nutzlage.
Halterung: Struktur, die den Trommel und die Bestandteile der Winde abstützt.
Endschalter (RES 4.1.2.3 der Richtlinie 2006/42 / EG):
Sie können mit Drehzahlmesser oder Sensor versehen sein und dienen, die Weite der Lastbewegungen innerhalb den vorgeschriebenen Grenzen zu halten. Sie werden je nach den spezifischen Bedürfnissen des Kunden und der Art der Anwendung zur Verfügung gestellt.
Seilandrückrolle: Es handelt sich um eine Vorrrichtung, die die Entspannung bzw. das Aufrollen des spannungslosen Seils auf den Trommel verhindert.
Zugbegrenzer (EN 12077-2)
Es handelt sich um die Sicherheitsvorrichtung, die verhindert, daß die Winde eine unzulässige Last aufhebt oder mit einer ungeeigneten Belastung beansprucht wird. Die Vorrichtung wird von TMA auf den höchsten,zulässigen Lastwert, der bei Auftrag erwähnt wurde,voreingestellt.
Lastüberwachungsventil (für Hydraulikwinden) Es verhindert, daß die Lastabgabegeschwindigkeit höher als die von der Anlage erhältliche Geschwindigkeit ist und stoppt die Bewegung bei Rohrbruch. In der Regel ist es am Motor mit einem Flansch angebracht.

1.3 Grundlegende Sicherheitshinweise

1) Überprüfen, daß die Winde Ihren Erfordernissen und den gültigen Vorschriften entspricht.
2) An der Maschine ein sicheres und festes Befestigungssystem vorsehen.
3) Winde durch die Befestigungsbohrungen richtig positionieren und sich vergewissern, daß die Befestigungsschrauben geeignet und sachgemäß angezogen sind.
4) Sollte die Winde Dritten leicht zugänglich sein, so sind Schutzeinrichtungen nach der Maschinenrichtlinie Richtlinie 2006/42 / EG vorzusehen.
5) Trommel mit der für eine korrekte Schmierung erforderlichen Ölmenge füllen und Ölstand überprüfen.
6) Seil ohne Schutzhandschuhen nicht handhaben und niemals versuchen, die Stellung des unter Last befindlichen Seils zu verändern.
7) Sich vergewissern, daß der Seil am Trommel einwandfrei befestigt ist und Eigenschaften und Abmessungen aufweist, die sich den Eigenschaften der Winde anpassen.
8) Überprüfen, daß die Bewicklungsrichtung des Seils richtig ist und der an der Winde aufgeführten Richtung entspricht.
Eine einwandfreie Montage des Seils verlängert seine Lebensdauer.
9) Überprüfen, daß der Seil vollkommen ist und keine abgerissenen Drahten bzw. keine Falten, die seinen Bruch verursachen könnten, aufweist.
10) Überprüfen, daß die Sicherheitseinrichtungen funktionsfähig und wirksam sind.
11) Sich vergewissern, daß die Betriebsbedingungen den Windeneigenschaften übereinstimmen.
12) Keine Zuge mit unzulässigen Lasten ausführen.

1.4 Transport und Lieferung - Lieferbedingungen

Jede Winde wird zusammengebaut, geprüft und auf Palette sachgerecht verpackt geliefert.
Bei der Lieferung ist das Produkt auf seine Vollständigkeit zu prüfen; die eventuellen Schäden sind der Spedition unverzüglich mitzuteilen.

2. ABSCHNITT

2. INSTALLATION UND BETRIEB

2.1 Installation

- Beim Einsatz mit waagerechter Achese können die TMA-Wellen unter Berücksichtigung der bestehenden Bohrungen in irgenwelcher Stellung montiert werden.
Für den Einsatz in verschiedenen Konfigurationen, Kundendienst mit TMA.
- Um unregelmäßige Spannungen an der Winde zu verhindern, die zu einer schnellen Abnutzung der Innenteile führen könnten, muß die Halterung, auf der die Winde befestigt wird, starr und flach sein.
- Welle auf der Platte positionieren und überprüfen, daß die Stützpunkte der Auflageplatte der Halterung genau aufeinanderpassen.
Sollte einen Zwischeraum zwischen den Auflageplatten bleiben, so sind geeignete Unterlegscheiben anzubringen und nur danach die Befestigungsschrauben anzuziehen.
Es empfiehlt sich, alle vorgesehene Befestigungsbohrungen zu verwenden; die Schrauben, die nicht unter der Klasse 8.8 sein müssen, sind mit einem geeigneten Anzugsmoment anzuziehen.
- Die Lage der Winde auf der Ankerplatte muß eine genaue, senkrechte Stellung zwischen der Trommelachse und der Linie, die die Mittellinie des Trommels mit der ersten Riemenscheibe verbindet, gewährleisten.
Kleine Abweichungen können eine unregelmäßige Bewicklung des Seils am Trommel verursachen.
- Der Abstand zwischen der Winde und der ersten Riemenscheibe muß den charakteristichen Betriebswinkel des Seils berücksichtigen.

ACHTUNG
Wenn die Winde in einer leicht zugänglichen Position angebracht ist, ist es notwendig, dass die Trommel und die beweglichen Teile ordentlich mit entsprechenden Sicherungsschutze geschützt werden (2006/42 / EG).Es ist notwendig, mit TMA auf die eventuelle Lieferung solcher Zubehör eine Bestimmung nach der tatsächlichen Bedürfnisse des Kunden zu zustimmen.

2.2 Schmierung

- Innenschmierung.
In Anbetracht dessen, daß die inneren Bestandteile der Winde, wie Getrieben, Lager und Bremsen, in Ölbad arbeiten, sind diese für einen einwandfreien Betrieb sachgerecht zu schmieren, indem den richtigen Ölstand stets gehalten wird.
- Für leichte Einsatzfälle ist ein Hydrauliköl mit optimalen Eigenschaften und einer mit den Betriebszuständen kompatiblen Viskosität zwischen 32 und 46 °E bei 40°C (z.B. AGIP OSO 32/46, BP ENERGOL HLP 32/46, ELF ELFOLINA 32/46, SHELL TELLUS OIL 32/46, SHELL HYDRAULIC OIL 32/46) zugelassen.
- Für harte Einsatzfälle ist dagegen ein spezifisches Getriebeöl zu verwenden, das eine der Temperatur und den Arbeitsbedingungen entsprechende Viskosität (z.B. ISO VG 150 EP) aufweist.

ACHTUNG
Die TMA-Winden werden ohne Schmieröl geliefert. Wird die Winde mit integriertem Seil geliefert, so ist die notwendige Ölmenge von Typ ISO VG 46 bereits im Trommel beinhaltet.
Vor der Inbetriebnahme der Winde, Trommel mit der in der Anlage 2 (Seite 28) aufgeführten Ölmenge füllen. Diese Menge ist für die Füllung der Trommelhälfte geeignet. Ölstand überprüfen und, wenn nötig, nachfüllen.
Die Temperatur des Schmieröls muß 100°C nicht überschreiten.

2.3 Montage des Seils

ACHTUNG
Beim Aufwickeln des Kabels ist es zu überprüfen, daß die Drehrichtung des Trommels der Richtung des Pfeiles am Trommelklebzettel entspricht

GEFAHR
Ist der Seil in falscher Drehrichtug am Trommel aufgewickelt, so könnte dies zur Lastkontrollverlust mit schweren Personen- und Sachschäden führen.

ACHTUNG
Um die Drehrichtung des Trommels zu verkehren, reicht es in der Regel aus, die Stellung der Seilbefestigung zu verkehren. Es empfiehlt sich, vor jeder Änderung bzw. Handhabung mit dem TMA-Kundendienst Kontakt aufzunehmen. Seilende in das entsprechende Langloch auf einer Seite des Trommels von innen nach aussen (Fig. 1) einführen.

GEFAHR
Keinen Seil mit unzulässiger Länge montieren, um den Sicherheitsvorschriften nicht entsprechenden Lagen zu vermeiden.

Seilende in das entsprechende Langloch auf einer Seite desTrommels voninnen nach aussen (Fig. 1) einführen.

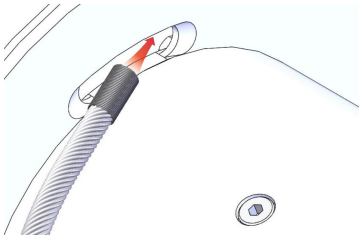

(fig.1)

2.3.1 Montage mit Keilkasten und Keil

Seil in den Keilkasten durch Ausführung einer Öse, in die der Keil (Fig. 2) einzustecken ist, einzuführen

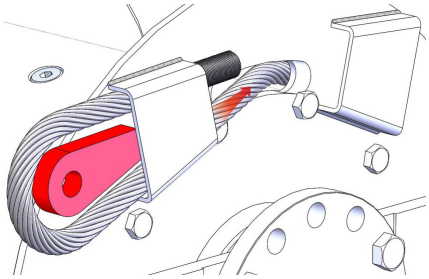

(fig.2)

Seil aus der entgegengesetzten Seite so ziehen, daß alles in denKeilkasten eintritt (Fig.3).

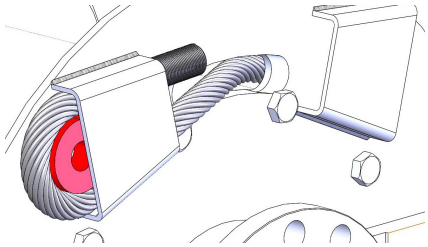

(fig.3)

2.3.2 Montage mit Seilklemmung

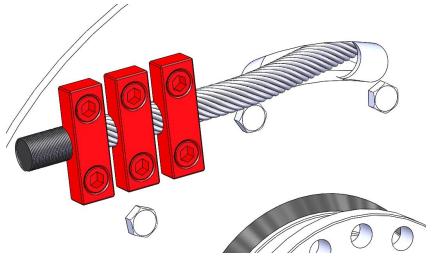

(fig.4)

Schrauben (Fig.4) so anziehen, daß der wie in der Fig. 1 eingeführte Seil blockiert wird.

GEFAHR
Prüfen Sie, daß die Befestigungsschrauben der Klemmen den Flügelblech nicht überschreiten. Bejahendenfalls sind die Schrauben angemessen zu verkürzen, um einen schweren Seilschaden zu vermeiden.

GEFAHR
Um das Halten der Last zu gewährleisten, ist es nötig, mindestens 4 Seilwindungen um den Trommel zu lassen. Das Befestigungssystem des an der Winde bestehenden Seils stellt keine ausreichende Gewährleistung dafür dar.

ACHTUNG
Bei erster Montage ist der Seil auf dem Trommel sachgemäß zu kompaktieren, d.h. es müssen keine Freiräume unter den Windungen bleiben. Seil mit der geeigneten Spannung aufwickeln. Bei Lastanwendung kann der nicht gut kompaktierte Seil zu Beschädigungen führen, wenn er in die darunterliegenden Windungen eindringt.

2.4 Hydraulik: Tips und Vorschriften

ACHTUNG
Die einwandfreie Funktion der Winde hängt von der Hydraulik ab, mit der die Vorrichtung verbunden ist.
Vergewissern Sie sich, daß die Kennwerte der Hydraulik hinsichtlich Höchstdruck und -durchfluss mit den Betriebseigenschaften der der Winde kompatibel sind.

Die TMA-Hydraulikwinden sind mit einer Negativ-Lamellenbremse und einem am Motor geflanschten Ventil zur Lastüberwachung ausgestattet.
- Bremse
Das Bremsdrehmoment wird durch die Reibung erreicht, die zwischen einer Serie von statischen Lamellen (mit der festen Struktur verbunden) und einer von beweglichen Lamellen (mit Antriebswelle verbunden) entsteht. Die Lamellen werden von der Kraft eines Federpakets untereinander gepresst.Die Wirkung der Feder kann von einem hydraulisch betätigten Kolben entgegengesetzt werden.Zum Öffnen der Bremse wird eine kleine Menge Öl aus der unter Druck stehenden Linie des Motorkreises abgenommen und zum im Bremskörper integrierten Kolben weitergeführt (zul. Öffnungsdruck: min. 2.6 - 2.8 MPa, max.28 - 30 MPa).
Somit wird die Wirkung der Feder ausgeglichen und die beweglichen Lamellen der Bremse freigemacht, was die freie Umdrehung der Motorwelle ermöglicht. Beim Abschalten der Winde wird der Hebel des Verteilungsventils auf die mittige Stellung gestellt. Um die Bremse wieder zu schließen und die Bewegung anzuhalten hat das Öl aus dem Kolben herauszufliessen, indem die Feder ihren Druck auf die Lamellen bewirken. Dabei ist es unbedingt notwendig, daß die Spule des Verteilungsventils, das den Motor steuert, so gestaltet ist, daß das Öl im Kolben ablaufen kann.Die Spule muß daher mit H-Kern sein. Siehe Hydraulikplan in der Anlage 6 (Seite 28).

GEFAHR
Die Verwendung einer Spule mit geschlossenem Kern verhindert den Ölablauf aus dem Kolben und macht sowohl die Feststellbremse als auch das Ventil zur Lastüberwachung unwirksam. Dies könnte einen unerwarteten Abfall der Last infolge der Entleerung des Hydraulikmotors aus Kavitationsgründen zur Folge haben.

- Lastüberwachungsventil.
Das Lastüberwachungsventil, das in der Regel am Motor durch einen Flansch angebracht ist, hat die Funktion eine dynamische Abbremsung der Last auszuführen. Es vehindert, daß die Motorgeschwindigkeit höher als die vom Öldurchfluss erlaubte Geschwindigkeit sein kann. Dazu unterbricht es die Lastbewegung durch die Bremswirkung im Falle einer Beschädigung an der Förderleitung des Motors.

GEFAHR
Einstellung des Lastüberwachungsventils nicht verändern..
Das Ventil wird von TMA beim dynamischen Prüfstandversuch geregelt. In der Regel wird die Prüfung von TMA mit Lasten über den Höchstnennzug durchgeführt.
Die unerlaubte Einstellung des Ventils könnte zur Lastkontrollverlust führen.

- Rohrleitung.
Die sachgerechte Ausführung der Hydraulik ist wichtig für eine einwandfreie Funktion der Winde. Es ist daher notwendig, den Nutzschnitt der Rohrleitungen je nach dem Öldurchfluss und der Länge der Anlage zu bemessen. Ein unzureichender Rohrschnitt führt zu Leitungsdruckgefällen mit der daraus entstehenden Betriebsdruckerhöhung der Gesamtanlage und Gegendruck in der Rücklaufleitung, was eine unregelmäßige Funktion oder Beschädigung der Winde verursachen kann.

ACHTUNG
Um eine einwandfreie Funktion der Winde zu erreichen, hat der für den Öldurchfluss erforderlichen Druck 0.5-1.0 Mpa nicht zu überschreiten.

Um die Seilwinde an der Hydraulikversorgung anzuschließen, beziehen Sie sich auf die bereitsgestellten Hydraulikschema und Datenblatt mit den richtigen Abmessungen und Positionen der Anschlüsse der Lieferung, Rücklauf und Ablauf. Der Innendurchmesser von letztem Rohr muß nicht kleiner als 1/4” sein.

ACHTUNG
Im Falle einer Drosselstelle bzw. einer Einschliesseung in der Rücklaufleitung würden ohne weiteres Schäden am Motor und an der Winde mit möglichen Ölverlusten auftreten.

- Sicherheitsventil.
Ein Sicherheits-Druckregelventil immer vorsehen; dieses Ventil ist auf einen Wert einzustellen, der 10-20% der in der Anlage 2 (Seite 28) aufgeführten Arbeitsdruck höher ist. In der Regel ist dieses Ventil wesentlicher Bestandteil des Abschaltventils; solltes dieses aber nicht vorhanden sein, so ist es in der Förderleitung der Winde vorzusehen.

ACHTUNG
Die in den TMA-Lastdiagrammen aufgeführten Betriebsdruckwerte beziehen sich auf den Einsatz mit einem Rücklaufdruck, der gleich hoch wie der Luftdruck ist.

- Filter
Um die richtige Lebensdauer der Winde zu erreichen, ist an der Hydraulik ein geeigneter Filter zu verwenden.
Für Kolbenmotoren: 10 micron
Für Umlaufmotoren: 25 micron
Die periodische Erneurung des Filters verlängert die Lebensdauer von allen Anlagenbestandteilen.
- Öl
Für die Hydraulik ist ein hochwertiges Öl zu verwenden, dessen Eigenschaften sich den gebrauchten Bestandteilen und den Umweltbedingungen anpassen.

ACHTUNG
Die Temperatur des Hydrauliköls muß 60 °C nicht überschreiten.

2.5 Einsatzbedingungen

ACHTUNG
Die Winde ist für den Einsatz in einem Temperaturraum von -20 °C bis +50°C ausgelegt worden. Der Einsatz der Winder außerhalb diesem Temperaturraum stellt eine unerlaubte und vom Hersteller nicht zugelassene Verwendung dar.
Für weitere Bedingungen siehe Anlage 2 (Seite 28).

2.6 Inbetriebnahme

- Schmierölstand überprüfen.
- Vor der Seilmontage, Anlage durch einige Betätigungen im Leerzustand auf ihre Funktion prüfen.
- Seil gemäß den vorherigen Anweisungen montieren.
- Bei reduzierter Last einige Heben durchführen und Endschalter auf ihre Funktion prüfen.
- Bei Nennlast einige Prüfugen ausführen und die Übereinstimmung zwischen dem Arbeitsdruckwert und dem in der TMA-Abnahmekarte aufgeführten Wert überprüfen.
Zugbegrenzer auf seine Funktion prüfen.

3. ABSCHNITT

3. WARTUNG

3.1 Wartungsarbeiten

Die TMA-Winden sind wartungsfreundlich.

ACHTUNG
Alle fünf Jahre ist die Winde von einer Fachwerkstatt komplett überholen zu lassen.

- Kontrolle des Schmieröls
Sowohl die Bremse als auch die Zahnräder arbeiten in Ölbad. Sich vergewissern, daß keine Schmierölverluste vorhanden sind und einmal im Monat den Ölstand nachprüfen und bei Bedarf nachfüllen. Ölwechsel nach 250 Betriebsstunden oder mindenstens einmal im Jahr empfohlen.

ACHTUNG
Das gewechselte Öl ist gemäß den gültigen Normen zu entsorgen.

- Seilkontrolle
Seil mit schwerflüssigen Ölen oder leichten Fetten, die Klebwirkstoffe mit Graphit, Molybdändisulfid oder Natriumtriphosphat enthalten, schmieren.

GEFAHR
Vor der Betätigung der Winde, sich vergewissern, daß der Seil vollständig ist. Sollte er Quetschungen oder beschädigte Drahte aufweisen, so ist er durch einen neuen geeigneten Seil zu ersetzen.

- Kontrolle des Schraubenanzugs
Anzug der Schrauben, die die Winde an der Struktur befestigen, von Zeit zu Zeit kontrollieren.

3.2 Mögliche Probleme: Ursachen und Abhilfen

PROBLEM	URSACHE	ABHILFE
Die Last fällt schnell.	Seil in entgegengesetzter Richtung montiert. Lastüberwachungsventil ungeeicht. Unregelmäßige Stellung des Lastüberwachungsventils. Ölfluss in falscher Richtung.	Kabel in der richtigen Richtung montieren. Mit dem Kundendienst Kontakt aufnehmen. Ventil in der richtigen Stellung montieren. Stellung der Vorlauf- und Rücklaufrohrs vertauschen.
Die Last sinkt langsam und kontinuerlich	Unwirksame Bremse Gegendruck an der Bremse. Steuerventil mit geschlossenem Wirkungsweg	Mit dem Kundendienst Kontakt aufnehmen. Gegendrücke an der Anlage beseitigen. Spule ersetzen.
Die Winde hebt die Last nicht auf	Niedrige Einstellung. Motor ausgefallen. Bremse blockiert	Einstellung verändern. Rücklaufölkontrolle. Motor ersetzen. Mit dem Kundendienst Kontakt aufnehmen
Die Welle hebt die Last langsam auf.	Niedrige Einstellung. Motor ausgefallen. Durchfluss unzureichend. Bremse nicht offen.	Einstellung verändern. Rücklaufölkontrolle. Motor ersetzen. Durchfluss der Pumpe prüfen. Mit dem Kundendienst Kontakt aufnehmen
Generisch ölverlust	Dichtungen beschädigt. Stopfen locker.	Mit dem Kundendienst Kontakt aufnehmen Ölstopfen verschließen.
Die Winde in Leerzustand dreht nich	Zahnräder beschädigt. Kein Durchfluss. Kein Druck an der Anlage.	Mit dem Kundendienst Kontakt aufnehmen Durchfluss der Pumpe prüfen. Pumpe kontrollieren
Zu geräuschvoll	Zahnrädergeräuschvoll. Hauptlager beschädigt. Kein Schmieröl. Öldurchfluss höher als der zulässige. Motor geräuschvoll.	Mit dem Kundendienst Kontakt aufnehmen Mit dem Kundendienst Kontakt aufnehmen Ölstand in der Trommel kontrollieren. Durchfluss der Pumpe kontrollieren. Mit dem Kundendienst Kontakt aufnehmen
Der Seil wickelt sich um die Trommel unregelmäßig herum	Ablenkwinkel zwischen Riemenscheibe (oder Vorgelege) und Trommel zu hoch. Bei Bewicklung ist der Seil nicht gespannt	Ablenkwinkel in den zulässigen Grenzen (2°) wieder bringen. Bei Bewicklung ist der Seil zu spannen.
ölverlust aus der entluftungsstopfen	Motor dichtungen beschädigt Bremse dichtungen beschädigt	wechseln die dichtungen
Die Winde schwingt.	Lose Befestigungsschrauben.	Befestigungsschrauben mit entsprechendem Anzugsmoment festziehen.

4. ABSCHNITT

4. ERSATZTEILLISTE UND GESAMTZEICHNUNG

4.1 Gesamtzeichnung

Siehe in der Anlage 4 (Seite 28).

4.2 Ersatzteilliste

Siehe in der Anlage 5 (Seite 28).

ARGANI VERRICELLI
HYDRAULIC
ELECTRIC WINCHES
41057 SPILAMBERTO – (MO) – ITALY
Via S.Vito 221 Tel. +39.059.78.17.11
www.tmawinches.com

IT **ALLEGATO N°**

1. PESO E DIMENSIONI
2. CONDIZIONI DI UTILIZZO
3. GRAFICO PRESTAZIONI
4. COMPLESSIVO
5. LISTA RICAMBI
6. SCHEMA IDRAULICO GENERALE
7. TRASPORTO E MOVIMENTAZIONE

GB **ATTACHMENT N°**

1. WEIGHT AND SIZES
2. OPERATING CONDITIONS
3. PERFORMANCES GRAHPS
4. DRAWING ASSAMBLY
5. SPARE PART LIST
6. BASIC HYDRAULIC DIAGRAM
7. LOADING AND TRANSPORT

E **ANEXO N°**

1. PESO Y DIMENSIONES
2. CONDICIONES DE EMPLEO
3. GRÀFICO DE LAS PRESTACIONES
4. PLANO DE CONJUNTO
5. LISTA REPUESTOS
6. ESQUEMA HIDRAULICO
7. TRANSPORT Y MOVILIZACIÓN

F **ANNEXE N°**

1. POIDS ET DIMENSION
2. CONDITIONS D'EMPLOI
3. GRAPHIQUE DES PRESTATIONS
4. VUE D'ENSEMBLE
5. LISTE PIECES DETACHEES
6. SCHEMA HYDRAULIQUE
7. TRANSPORT ET MOUVEMENT

D **ANLAGE N°**

1. GEWICHT UND ABMESSUNGEN
2. BETRIEBSBEDINGUNGEN
3. GRAPHIK DER LEISTUNGEN
4. GESAMTZEICH
5. ERSATZTEILLISTE
6. HYDRAULIKPLAN
7. TRANSPORT UND VERSCHIEBUNG

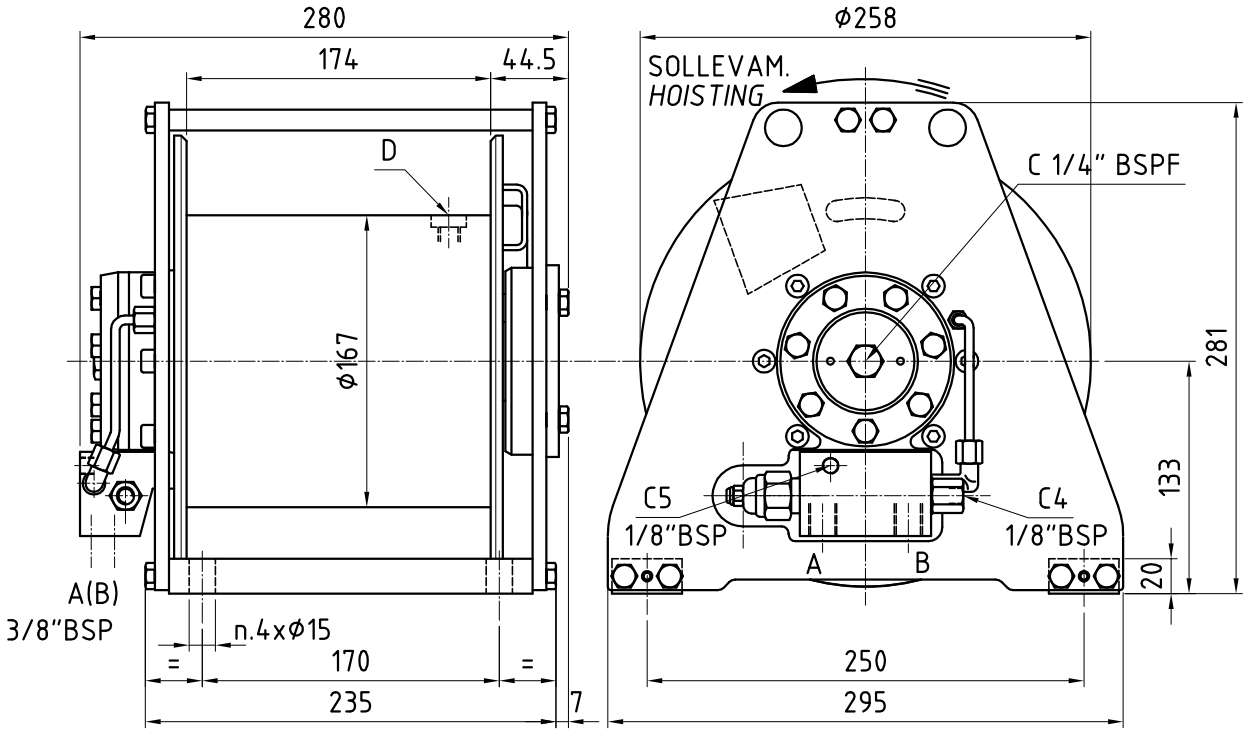

MASSA - WEIGHT - MASA - MASS - GEWICHT: kg 41

ANGOLI DI UTILIZZO - OPERATING ANGLES - ANGULOS DE EMPLEO - ANGLES D'EMPLOI - EINSATZWINKEL

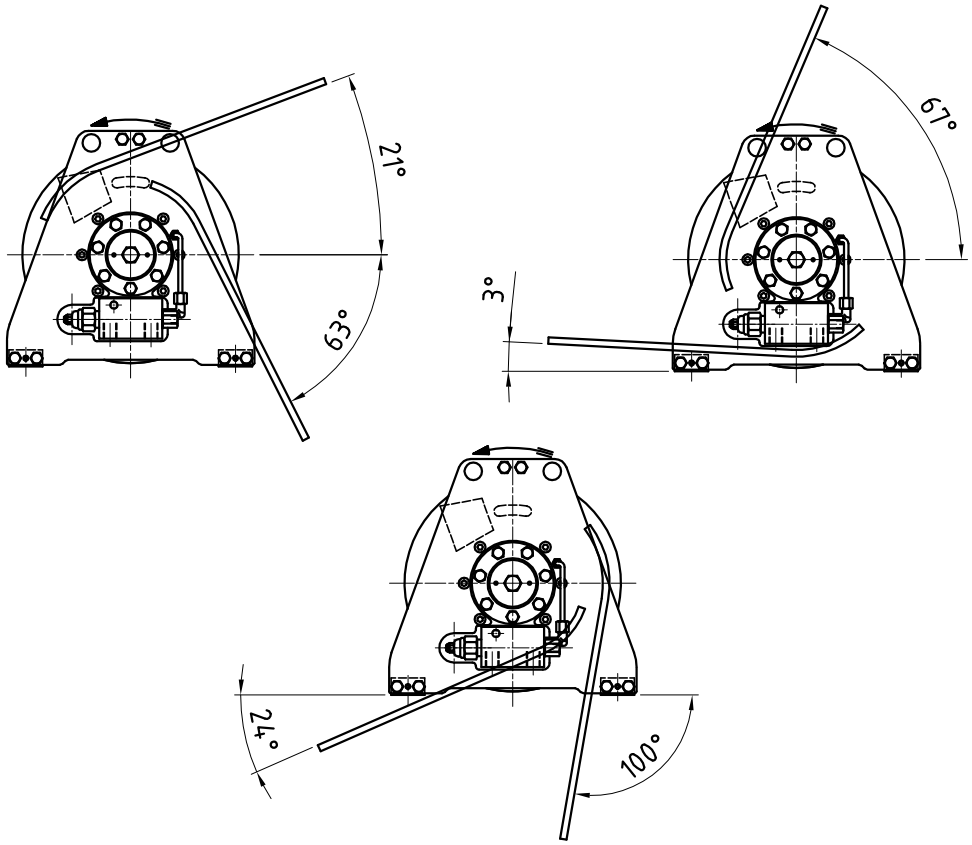

*Tiro nominale: 10 kN al 1° strato
* Motore idraulico con cilindrata: 100 cc
* Pressione nominale di lavoro: 17,5 MPa (175 bar) - Pressione massima di funzionamento allo spunto: 18,5 MPa (185 bar)
* Velocità massima di sollevamento : 49 m/min al 4° strato
* Flusso massimo di funzionamento: 40 L/min - Flusso minimo di funzionamento: 10 L/min
* Riduttore epicicloidale con rapporto di riduzione di 1:4,875
* Freno negativo multidisco con coppia statica di: 48 daNm
* Pressione minima di apertura freno: 2,7 MPa (27 bar) - Pressione massima ammissibile nel freno: 30 MPa (300 bar)
* Quantità di fune avvolgibile: 50 m di fune Ø8 su 4 strati (DIN 15020)
* Quantità di fune avvolgibile a tamburo pieno: 66 m di fune Ø8 su 5 strati (DIN 15020)
* Pressione massima ad argano fermo, misurata allo scarico del distributore: 0,5 MPa (5 bar)
* Lubrificazione parti interne con olio - quantità 0,4 Kg.
* Fissaggio dell'argano con n°4 viti M14 classe minima 8,8 serrate con coppia di135 Nm

* Nominal hoisting pull: 10 kN on 1th layer
* Hydraulic motor displacement: 100 cc
* Working pressure: 17,5 MPa (175 bar) - Maximum starting pressure: 18,5 MPa (185 bar)
* Maximum line speed: 49 m/min on 4th layer
* Maximum working flow: 40 L/min - Minimum working flow: 10 L/min
* Planetary gear reduction ratio: 1:4,875
* Multidisc negative brake, braking static torque: 48 daNm
* Minimum opening brake pressure: 2,7 MPa (27 bar) - Maximum allowable brake pressure: 30 MPa (300 bar)
* Rope storage quantity: 50 m of cable Ø 8 on 4 layers (DIN 15020)
* Maximum storage rope quantity with full drum: 66 m of cable Ø 8 on 5 layers
* Maximum pressure with stopped winch, measured at the distributor exhaust manifold: 0,5 MPa (5 bar)
* Internal lubrication - quantity 0,4 Kg.
* Fixing the winch with n°4 screw M14 minimum class 8,8 tightened with a torque of 135 Nm

* Tiro nominal: 10 kN al 1 estrato
* Motor hidráulico con cilindrada: 100 cc
* Presión nominal de trabajo: 17,5 MPa (175 bar) - Presión máxima de funcionamiento alo arranque: 18,5 MPa (185 bar)
* Velocidad máxima de levantamiento: 49 m/min al 4 estrato
* Flujo máximo de funcionamiento: 40 L/min - Flujo mínimo de funcionamiento: 10 L/min
* Reductor planetario con relación de transmisión 1:4,875
* Freno negativo multidisco con par estatico di: 48 daNm
* Presión mínima de apertura freno: 2,7 MPa (27 bar) - Presión máxima admisible en el freno: 30 MPa (300 bar)
* Cantidad de cable enrollable: 50 m de cable Ø 8 en 4 estratos (DIN 15020)
* Cantitad de cable enrollable con tambor lleno: 66 m de cable Ø 8 en 5 estratos
* Presión máxima a cabrestante parado, medido alo descargue del distribuidor: 0,5 MPa (5 bar)
* Lubricación partes internas con aceite - cantidad 0,4 Kg.
* Fijar el cabrestante con n°4 tornillos M14 clase mínima 8,8 y apretarlos con par de 135 Nm

* Trait nominal : 10 kN au 1 couche
* Moteur hydraulique avec cylindrée 100 cc
* Pression nominal de travail :17,5 MPa (175 bar) - Pression maxime de functionnement au décollage : 18,5 MPa (185 bar)
* Vitesse maxime de levage : 49 m/min au 1 couche
* Flux maxime de functiooement: 40 L/min - Flux minimum de functiooement: 10 L/min
* Réducteur épicycloidal avec rapport de réduction de 1:4,875
* Frein négatif multidisque avec couple statique de : 48 daNm
* Pression minimum ouverture frein : 2,7 MPa (27 bar) - Pression maxime admissible dans le frein: 30 MPa (300 bar)
* Quantité de cable enroulable: 50 m Ø 8 su 4 couches (DIN 15020)
* Quantité de cable enroulable a tambour plein: 66 m Ø 8 su 5 couches
* Pression maxime a treuil ferme, mesurè au décharge du distributeur: 0,5 MPa (5 bar)
* Lubrification parties internes avec huile - quantité 0,4 Kg.
* Fixer le treuil avec n°4 vis M 14 classe minime 8,8 et serré le vis avec couple de 135 Nm

* Nennzugkraft: 10 kN bei 1 seillage
* Hydraulimotor mit hubraum: 100 cc
* Nennarbeitsdruck: 17,5 MPa (175 bar) - Hochstbetriebsdruck bei anlass: 18,5 MPa (185 bar)
* Max. hebegeschwindigkeit: 49 m/min bei 4 seillage
* Max. betriebsdurchfluss: 40 L/min - Min. betriebsdurchfluss: 10 L/min
* Planetenuntersetzungsgetriebe mit untersetzungsverhaltnis von 1:4,875
* Negative lamellenbremse mit stutzmoment von 48 daNm
* Mindestdruck zur bremsenoffnung: 2,7 MPa (27 bar) - In der bremse zulassiger hochstdruck: 30 MPa (300 bar)
* Trommelbare Seilmenge: 50 m Durchm. 8 auf 4 seillage (DIN 15020)
* Trommelbare seilmenge bei vollem trommel: 66 m Durchm. 8 auf 5 seillage
* Hochstdruck bei stehender winde, am auslauf des wegeventils gemessen: 0,5 MPa (5 bar)
* Olschmierung der innenteile - menge: 0,4 Kg.
* Befestigung der winde durch 4 schrauben M14 min. klasse 8,8, mit drehmoment von 135 Nm angezogen

DIAGRAMMA PRESSIONE-TIRO PULL-PRESSURE DIAGRAM DIAGRAMA PRESION-TIRO
DIAGRAM PRESSION-TIR DIAGRAMM DRUCK-ZUG

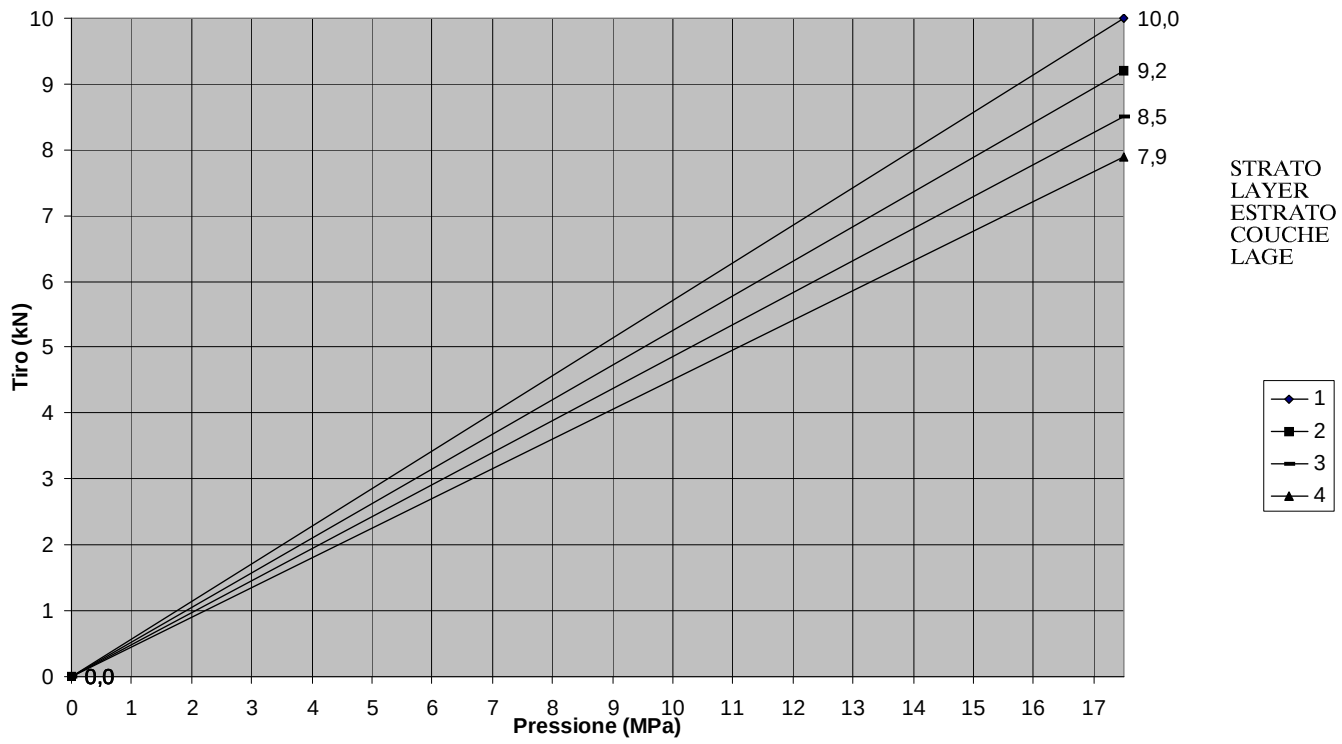

DIAGRAMMA PORTATA-VELOCITA' SPEED-FLOW DIAGRAM DIAGRAMA FLUJO-VELOCIDAD
DIAGRAM DEBIT-VITESSE DIAGRAMM DURCHFLUSSMENGE-GESCHWINDIGKEIT

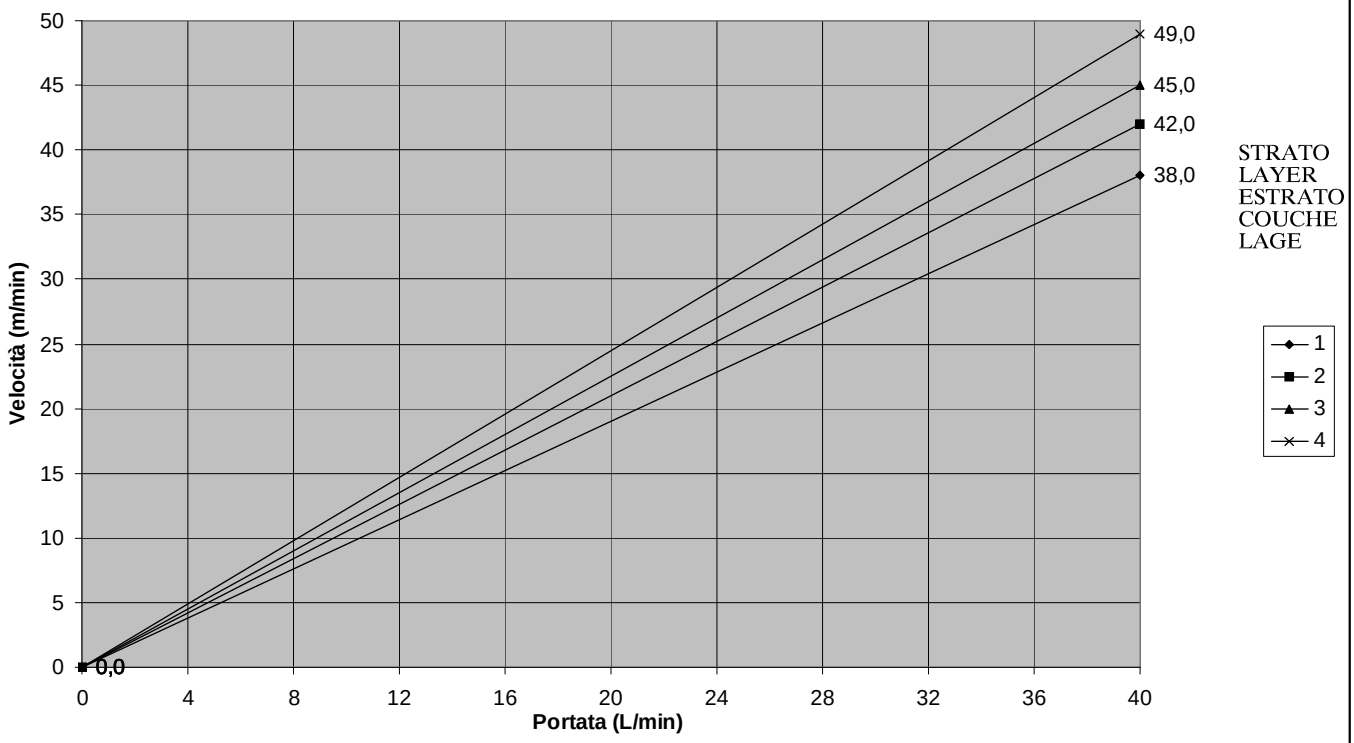

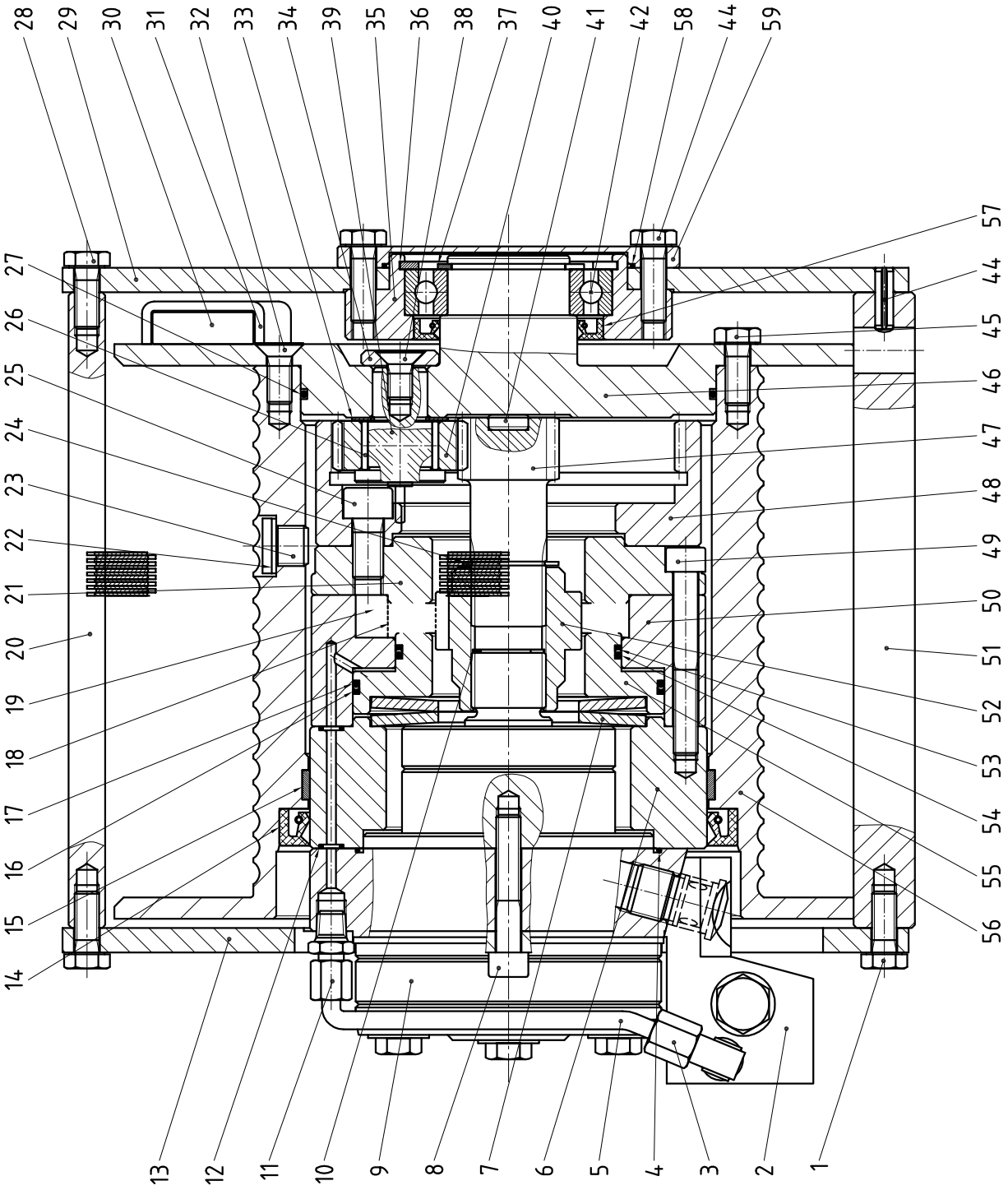

4

COMPLESSIVO
DRAWING ASSAMBLY
PLANO DE CONJUNTO
VUE D'ENSEMBLE
GESAMTZEICH

ARGANI VERRICELLI

9.01.50.58

POS.	Q.	ITALIANO	ENGLISH	ESPAÑOL	FRANÇAIS	DEUTSCH	POS.
1	8	VITE T.E. 10.9 UNI 5739	SCREW T.E. 10.9 UNI 5739	TORNILLO UNI 5739	VIS UNI 5739	SCHRAUBE UNI 5739	1
2	1	VALVOLA DI BLOCCO	COUNTERBLANCE VALVE	VALVULA DE BLOQUEO	VANNE D'ARRET	SPERRVENTIL	2
3	1	RACCORDO CONICO	PIPE FITTING	TUBERIA	RACCORD	VERBINDUNG	3
4	1	GUARNIZIONE O-RING	O-RING	O-RING	O-RING	O-RING	4
5	1	TUBO DI COLLEGAMENTO	BRAKE PIPE	TUBO DE CONEXION	TUYAU DE CONNEXION	ANSCHLUSSROHR	5
6	1	ANELLO SUPPORTO TAMBURO	DRUM RING	ANILLO SUPORTE TAMBOR	BAGUE SUPPORT TAMBOUR	TROMMELRING	6
7	2	MOLLA A TAZZA	BELLEVILLE SPRING	MUELLE PLANO	RESSORT A DISQUES	TELLERFEDER	7
8	6	VITE TCEI 12.9 UNI 5931	SCREW UNI 5931	TORNILLO UNI 5931	VIS UNI 5931	SCHRAUBE UNI 5931	8
9	1	MOTORE IDRAULICO	HYDRAULIC MOTOR	MOTOR HIDRAULICO	MOTEUR HYDRAULIQUE	HYDRAULIKMOTOR	9
10	1	ANELLO ELASTICO PER FORO DIN 472	RETAINING RING DIN 472	ANILLO ELASTICO DIN 471	JOINT D'ARRET POUR AXE DIN 471	WELLENBORDRING DIN 471	10
11	1	RACCORDO CONICO	PIPE FITTING	TUBERIA	RACCORD	VERBINDUNG	11
12	1	GUARNIZIONE O-RING	O-RING	O-RING	O-RING	O-RING	12
12	1	GUARNIZIONE O-RING	O-RING	O-RING	O-RING	O-RING	12
13	1	SUPPORTO LATO MOTORE	MOTOR SIDE BRACKET	SOPORTE LADO MOTOR	SUPPORT COTE MOTEUR	HALTER MOTORSEITIG	13
14	1	ANELLO DI TENUTA	OIL SEAL	EMPAQUETADO	BAGUE D'ETANCHEITE	DICHTRING	14
15	1	ANELLO	RING	ANILLO	BAGUE	RING	15
16	1	ANELLO ANTIESTRUSIONE	PARBAK RING	ANILLO ANTIEXTRUSION	BAGUE ANTIEXTRUSION	VERSTEIFUNGSRING	16
17	1	GUARNIZIONE O-RING	O-RING	O-RING	O-RING	O-RING	17
18	5	DISCO	BRAKE PLATE	DISCO	DISQUE DE FREIN	BREMSSCHEIBE	18
19	6	CONTRODISCO	DIVIDER PLATE	CONTRADISCO	CONTRE-DISQUE	GEGENSCHEIBE	19
20	1	DISTANZIALE SUPPORTI	SPACER	ANILLO RIOSTRA RIDUCTOR	BAGUE D'ECARTEMENT REDUCTEUR	GETRIEBE-ABSTANDRING	20
21	1	ANELLO CHIUSURA FRENO	BRAKE CLOSER RING	ANILLO DE CIERRE FRENO	BAGUE DE FERMETURE FREIN	BREMSVERSCHLUSSRING	21
22	1	RONDELLA	WASHER	ARANDELA	BRIDE	FLANSCH	22
23	1	TAPPO	PLUG	TAPON RESPIRADERO	BOUCHON DE VIDANGE	ENTLÜFTUNGSSTOPFEN	23
24	1	ANELLO ELASTICO PER ALBERO DIN 471	RETAINING RING DIN 472	ANILLO ELASTICO DIN 471	JOINT D'ARRET POUR AXE DIN 471	WELLENBORDRING DIN 471	24
25	6	VITE TCEI 12.9 UNI 5931	SCREW UNI 5931	TORNILLO UNI 5931	VIS UNI 5931	SCHRAUBE UNI 5931	25
26	108	RULLINO	ROLLER	RODILLO	ROULEAU	ROLLE	26
27	1	GUARNIZIONE O-RING	O-RING	O-RING	O-RING	O-RING	27
28	4	VITE T.E. 10.9 UNI 5739	SCREW T.E. 10.9 UNI 5739	TORNILLO UNI 5739	VIS UNI 5739	SCHRAUBE UNI 5739	28
29	1	SUPPORTO LATO RIDUTTORE	GEAR SIDE BRACKET	SOPORTE LADO REDUCTOR	SUPPORT COTE REDUCTEUR	HALTER GETRIEBENSEITIG	29
30	1	RADANCIA A GOCCIA	THIMBLE	GUARDACABO	CONE	KEIL	30
31	2	TASCA PORTA RADANCIA	THIMBLE POCKET	SEDE DEL GUARDACABO	BOITE A CONE	KEILKASTEN	31
32	2	VITE TSPEI 10.9 UNI 5933	SCREW TSPEI 10.9 UNI 5933	TORNILLO UNI 5933	VIS UNI 5933	SCHRAUBE UNI 5933	32
33	3	RALLA	THRUST RACE	RANGUA	CRAPAUDINE	DREHTEIL	33
34	3	RONDELLA	WASHER	ARANDELA	BRIDE	FLANSCH	34
35	1	FLANGIA FISSAGGIO CUSCINETTO	BEARING FIXING FLANGE	ARANDELA DE FIJACION COJINETE	BRIDE DE FIXATION ROULEMENT	LAGERBEFESTIGUNGSFLANSCH	35
36	1	ANELLO ELASTICO PER FORO DIN 472	RETAINING RING DIN 472	ANILLO ELASTICO DIN 471	JOINT D'ARRET POUR AXE DIN 471	WELLENBORDRING DIN 471	36
37	1	ANELLO ELASTICO PER ALBERO DIN 471	RETAINING RING DIN 472	ANILLO ELASTICO DIN 471	JOINT D'ARRET POUR AXE DIN 471	WELLENBORDRING DIN 471	37
38	3	VITE TSPEI 10.9 UNI 5933	SCREW TSPEI 10.9 UNI 5933	TORNILLO UNI 5933	VIS UNI 5933	SCHRAUBE UNI 5933	38
39	3	PERNO SATELLITE	PLANET PIN	PIVOTE SATELITE	PIVOT ENGRENAGE PLANETAIRE	PLANETENRADZAPFEN	39
40	3	SATELLITE	PLANET	SATELITE	SATELLITE	PLANETENRAD	40
41	1	PASTIGLIA DI RASAMENTO	TEFLON SHIM	PASTILLA	CALE D'EPAISSEUR	ZWISCHENLEGSCHEIBE	41
42	1	CUSCINETTO A SFERE	BALL BEARING	COJINETE A BOLAS	ROULEMENT A BILLES	KUGELLAGER	42
43	4	VITE T.E. 10.9 UNI 5739	SCREW T.E. 10.9 UNI 5739	TORNILLO UNI 5739	VIS UNI 5739	SCHRAUBE UNI 5739	43
44	4	SPINA ELASTICA UNI 6873	ELASTIC PIN UNI 6873	VASTAGO ELASTICO UNI 6873	GOUPILLE ELASTIQUE UNI 6873	KERBSTIFT UNI 6873	44
45	4	VITE T.E. 10.9 UNI 5739	SCREW T.E. 10.9 UNI 5739	TORNILLO UNI 5739	VIS UNI 5739	SCHRAUBE UNI 5739	45
46	1	FIANCATA LATO RIDUTTORE	GEAR SIDE FLANGE	FLANCO LADO REDUCTOR	FLANC COTE REDUCTEUR	SEITENWAND GETRIEBENSEITIG	46
47	1	SOLARE	SUN GEAR	EJE SOLAR	AXE PLANETAIRE	SONNENWELLE	47
48	1	CORONA RIDUTTORE	INTERNAL GEAR	CORONA GUIDACABLE	COURONNE GUIDE DE CABLE	SEILFÜHRUNGSKRANZ	48
49	6	VITE TCEI 12.9 UNI 5931	SCREW UNI 5931	TORNILLO UNI 5931	VIS UNI 5931	SCHRAUBE UNI 5931	49
50	1	CORPO FRENO	BRAKE HOUSING	CUERPO FRENO	CORPS FREIN	BREMSKÖRPER	50
51	2	PIATTO DI FISSAGGIO	FIXING PLATE	PLATO DE FIJACION	PLATEAU DE FIXATION	BEFESTIGUNGSPLATTE	51
52	1	INGRANAGGIO PORTA DISCHI	BRAKE PLATE GEAR	ENGRANAJE PORTADISCOS	ENGRENAGE PORTE-DISQUES	BREMSSCHEIBEN-MITNEHMER	52
53	1	ANELLO ANTIESTRUSIONE	PARBAK RING	ANILLO ANTIEXTRUSION	BAGUE ANTIEXTRUSION	VERSTEIFUNGSRING	53
54	1	GUARNIZIONE O-RING	O-RING	O-RING	O-RING	O-RING	54
55	1	PISTONE FRENO	BRAKE PISTON	PISTON FRENO	PISTON DE FREIN	BREMSKOLBEN	55
56	1	TAMBURO	DRUM	TAMBOR	TAMBOUR	TROMMEL	56
57	1	ANELLO DI TENUTA	OIL SEAL	EMPAQUETADO	BAGUE D'ETANCHEITE	DICHTRING	57
58	1	GUARNIZIONE O-RING	O-RING	O-RING	O-RING	O-RING	58
59	1	COPERCHIO CUSCINETTO	COVER BEARING	TAPA POR COJINETE DE BOLAS	COUVERCLE ROULEMENT	LAGERDECKEL	59

9.01.50.58

ARGANI VERRICELLI

LISTA RICAMBI
SPARE PART LIST
LISTA REPUESTOS
LISTE PIECES DETACHEES
ERSATZTEILLISTE

5

Bilag 3

1 ARGANO
2 MOTORE IDRAULICO
3 VALVOLA DI BILANCIAMENTO
4 VALVOLA DI MESSA A SCARICO

A - SOLLEVAMENTO
B - DISCESA

1 WINCH
2 HYDRAULIC MOTOR
3 COUNTERBALANCE VALVE
4 EXAUST VALVE

A - LIFTING
B - LOWERING

1 CABRESTANTE
2 MOTOR HIDRAULICO
3 VALVULA DE BLOQUEO
4 VALVULA DE DESCARGA

A - LEVANTAMIENTO
B - DESCENSA

1 TREUIL
2 MOTEUR HYDRAULIQUE
3 SOUPAPE DE CONTROLE DESCENTE
4 VALVE DÉCHARGE DE MASSE

A - LEVAGE
B - DESCENTE

1 WINDE
2 HYDRAULIKMOTOR
3 AUSGLEICHVENTIL
4 VALVE ENTLASTUNG MASS

A - HEBEN
B - SENKEN

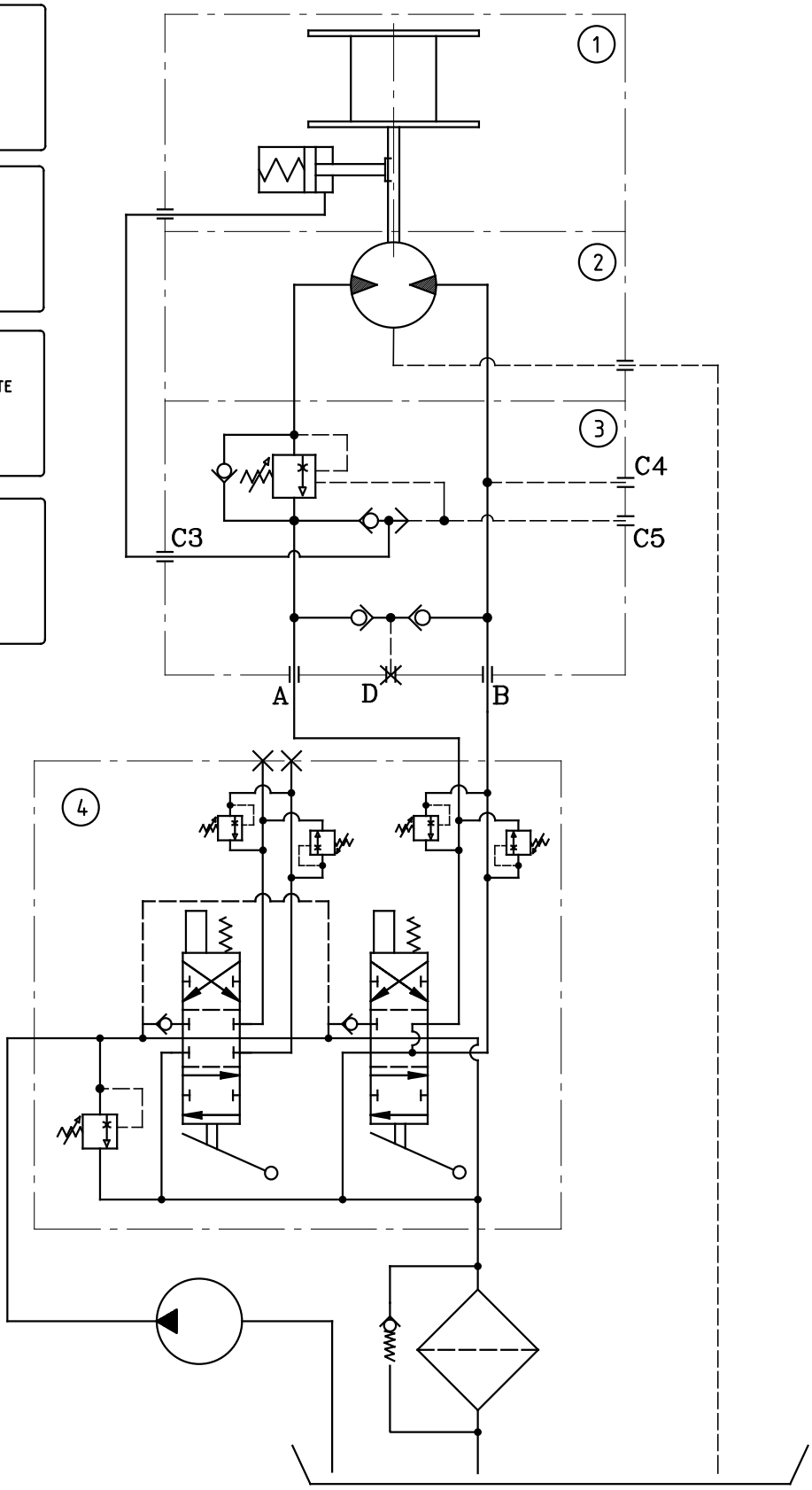

6	SCHEMA IDRAULICO GENERALE BASIC HYDRAULIC DIAGRAM ESQUEMA HIDRAULICO SCHEMA HYDRAULIQUE HYDRAULIKPLAN ARGANI VERRICELLI	6

Bilag 3

MOVIMENTAZIONE SENZA PALLET
HANDLING WITHOUT PALLET
MOVILIZACION SIN PALLET
MANUTENTION SANS PALETTE
BEWEGUNG OHNE PALETTE

PRESA PER SOLLEVAMENTO
HOISTING POINT
AGARRE POR LEVANTAMIENTO
PRISE DE LEVAGE
ABTRIEB ZUM HEBEN

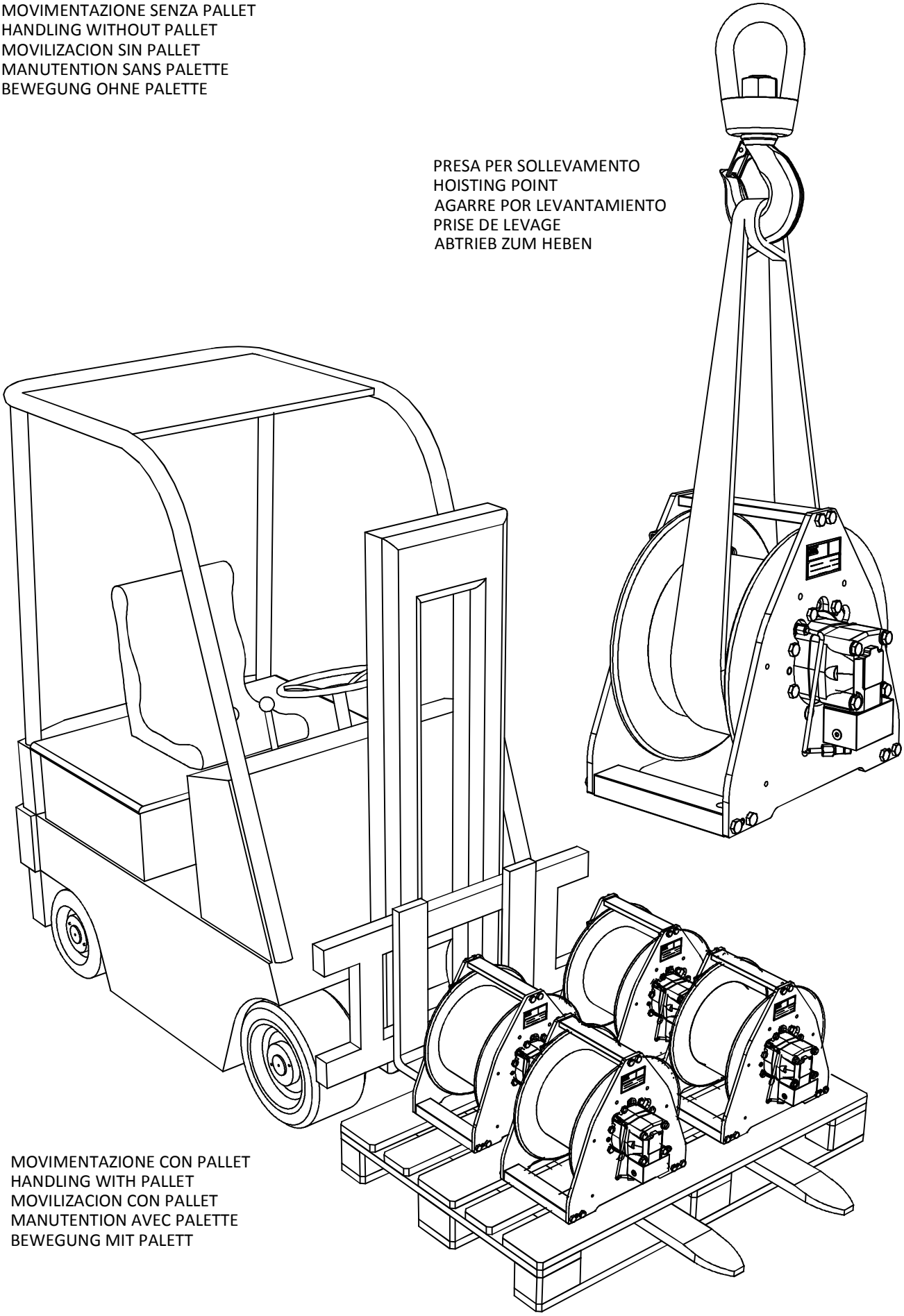

MOVIMENTAZIONE CON PALLET
HANDLING WITH PALLET
MOVILIZACION CON PALLET
MANUTENTION AVEC PALETTE
BEWEGUNG MIT PALETT

ARGANI VERRICELLI

MW 14

PESO E DIMENSIONI
WEIGHT AND SIZES
PESO Y DIMENSIONES
POIDS ET DIMENSION
GEWICHT UND ABMESSUNGEN

ALLEGATO N.
ATTACHMENT N.
ANEXO N.
ANNEXE N.
ANLAGE N.

1

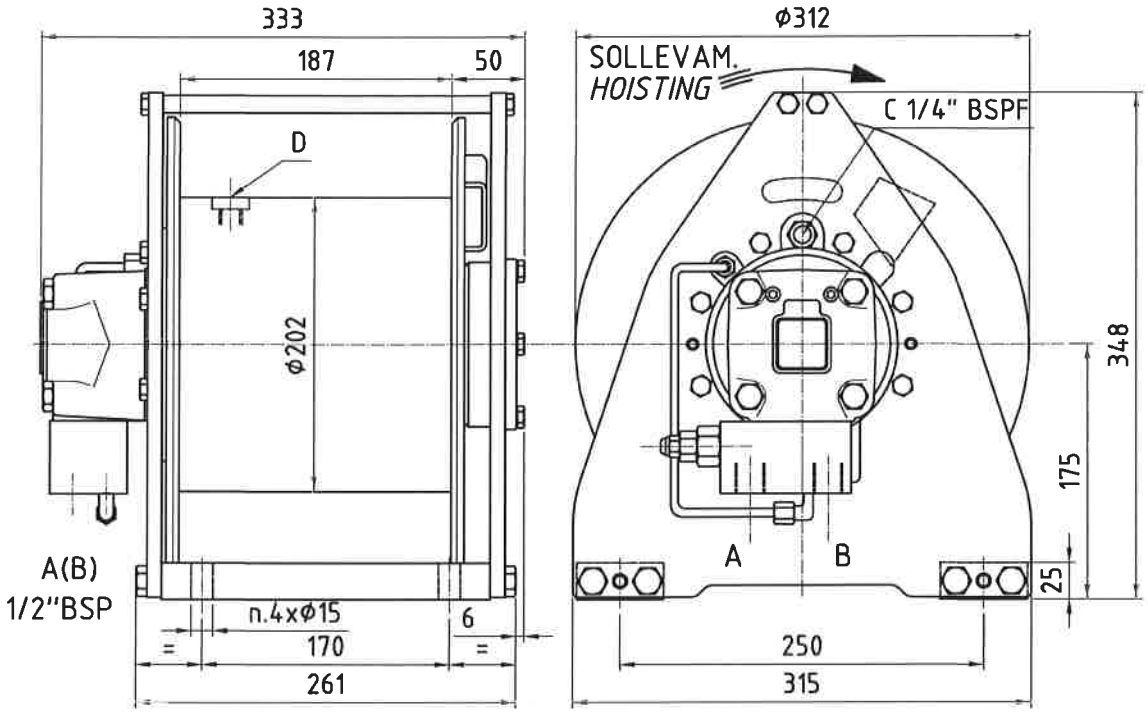

MASSA - WEIGHT - MASA - MASS - GEWICHT: kg 71

ANGOLI DI UTILIZZO - OPERATING ANGLES - ANGULOS DE EMPLEO - ANGLES D'EMPLOI - EINSATZWINKEL

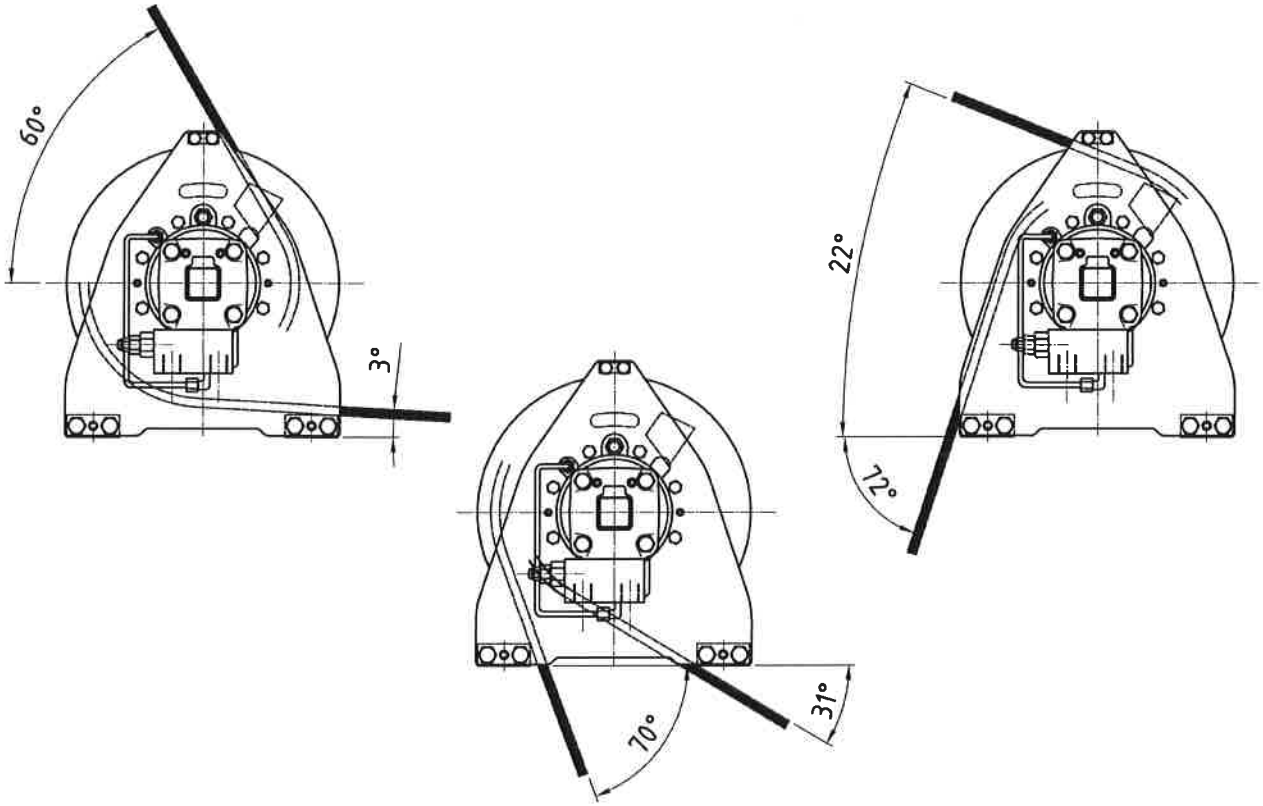

ARGANI VERRICELLI

MW 18

PESO E DIMENSIONI
WEIGHT AND SIZES
PESO Y DIMENSIONES
POIDS ET DIMENSION
GEWICHT UND ABMESSUNGEN

ALLEGATO N.
ATTACHMENT N.
ANEXO N.
ANNEXE N.
ANLAGE N.

1

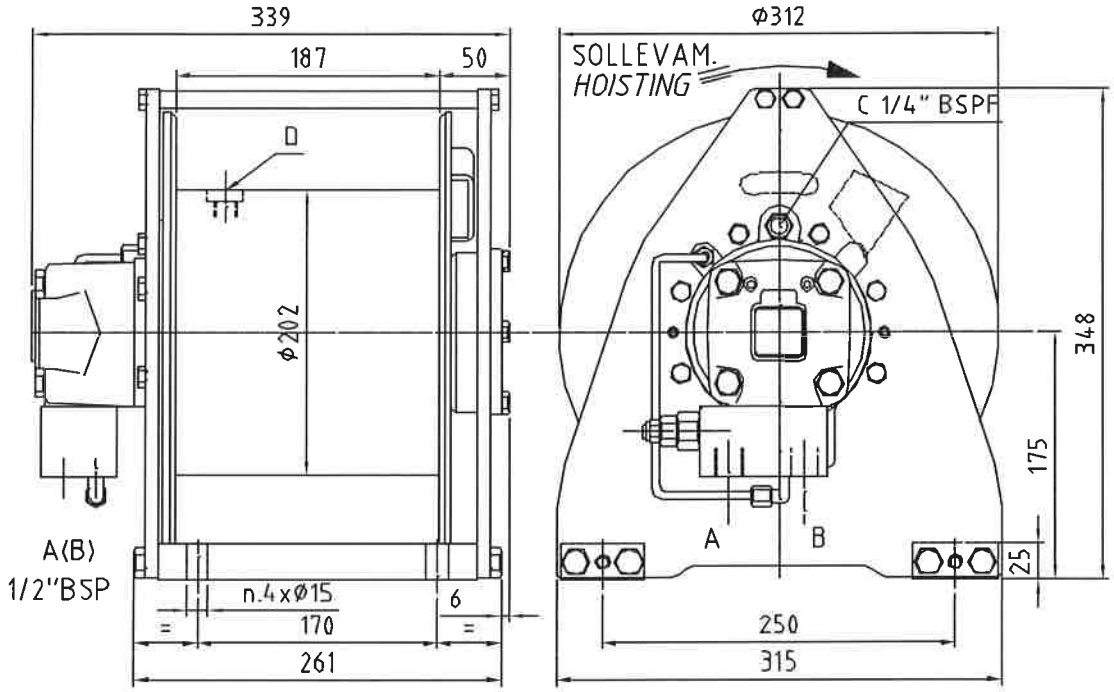

MASSA - WEIGHT - MASA - MASS - GEWICHT: kg 72

ANGOLI DI UTILIZZO - OPERATING ANGLES - ANGULOS DE EMPLEO - ANGLES D'EMPLOI - EINSATZWINKEL

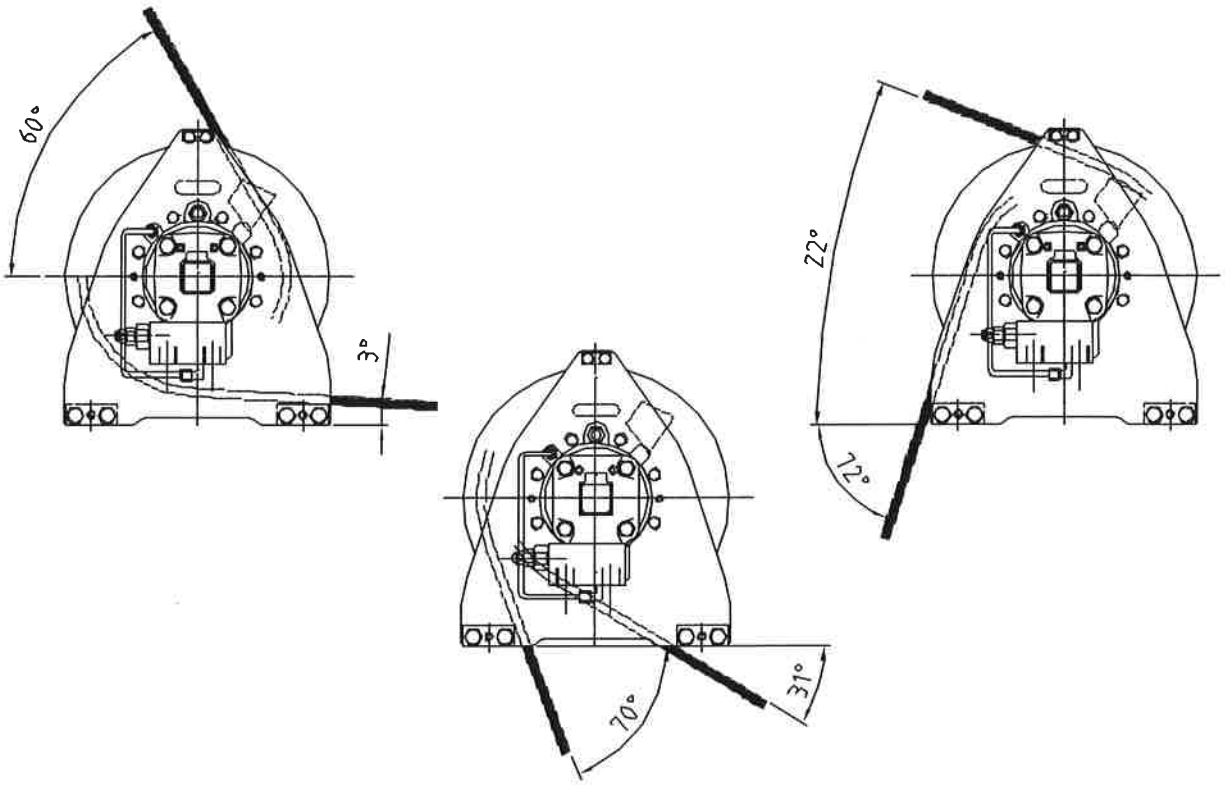

ARGANI VERRICELLI

MW 14

CONDIZIONI DI UTILIZZO
OPERATING CONDITIONS
CONDICIONES DE EMPLEO
CONDITIONS D'EMPLOI
BETRIEBSBEDINGUNGEN

ALLEGATO N.
ATTACHMENT N.
ANEXO N.
ANNEXE N.
ANLAGE N.

2

DIAGRAMMA PRESSIONE-TIRO PULL-PRESSURE DIAGRAM DIAGRAMA PRESION-TIRO
DIAGRAM PRESSION-TIR DIAGRAMM DRUCK-ZUG

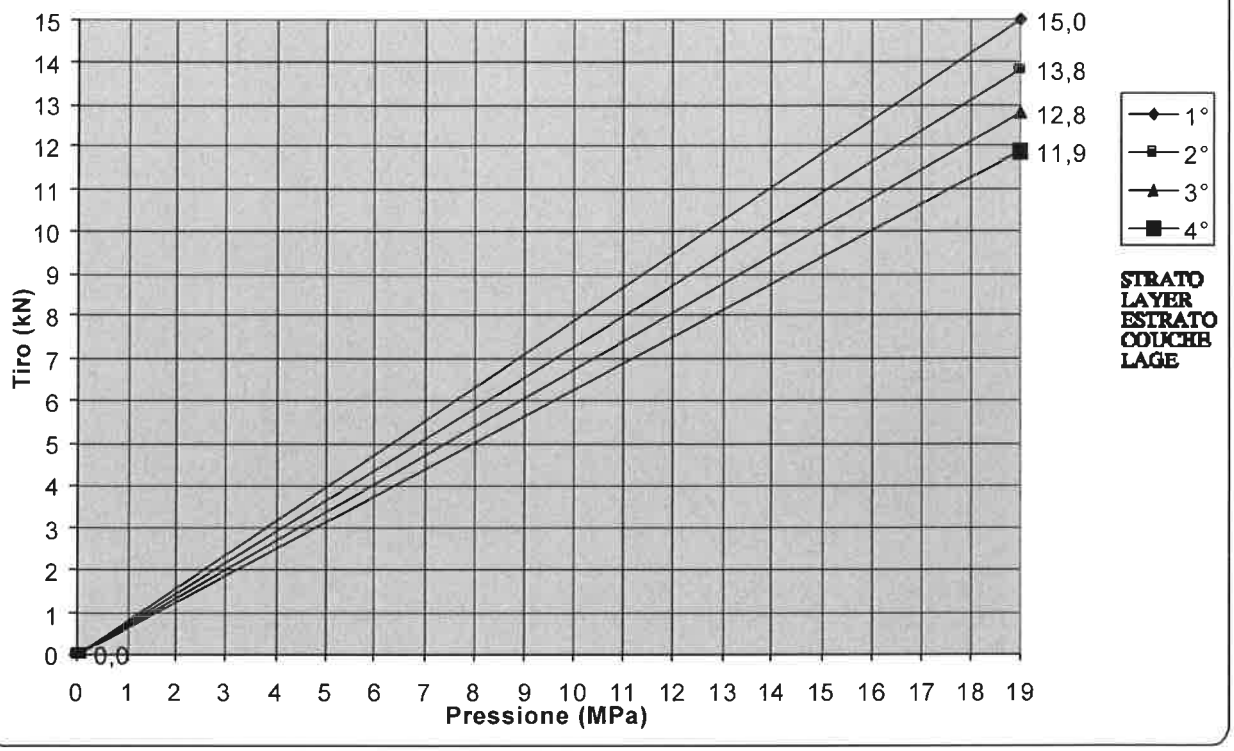

DIAGRAMMA PORTATA-VELOCITA' SPEED-FLOW DIAGRAM DIAGRAMA FLUJO-VELOCIDAD
DIAGRAM DEBIT-VITESSE DIAGRAMM DURCHFLUSSMENGE-GESCHWINDIGKEIT

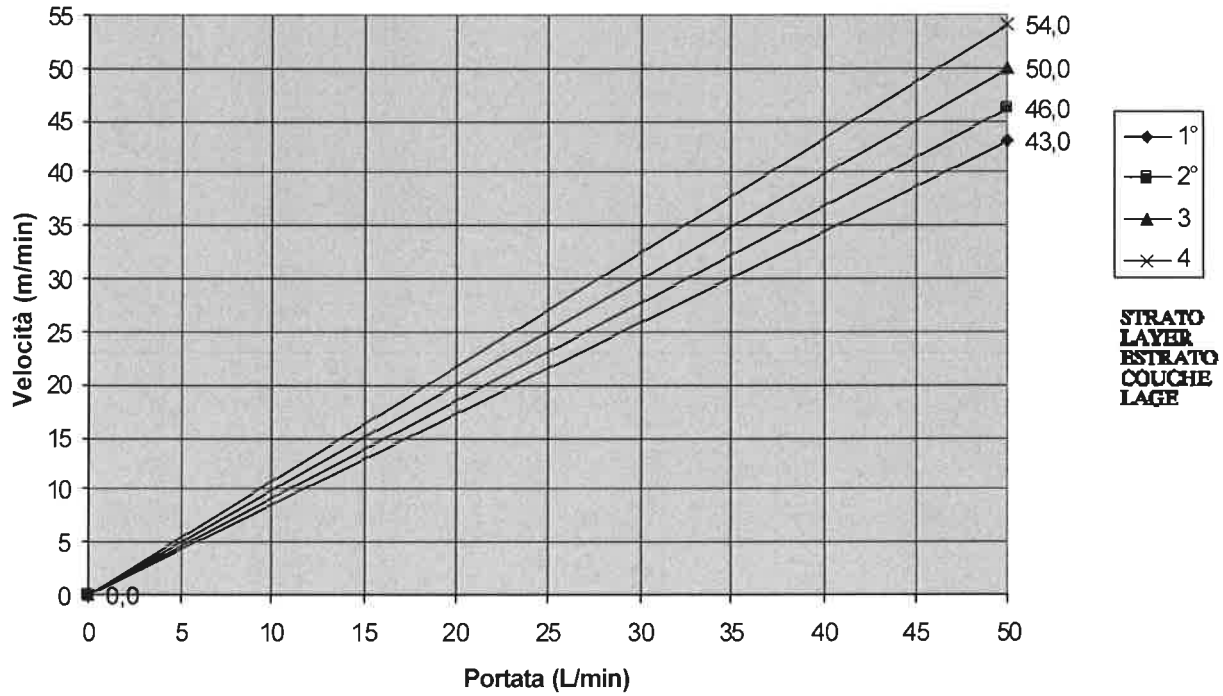

ARGANI VERRICELLI

MW 18

CONDIZIONI DI UTILIZZO
OPERATING CONDITIONS
CONDICIONES DE EMPLEO
CONDITIONS D'EMPLOI
BETRIEBSBEDINGUNGEN

ALLEGATO N.
ATTACHMENT N.
ANEXO N.
ANNEXE N.
ANLAGE N.

2

DIAGRAMMA PRESSIONE-TIRO PULL-PRESSURE DIAGRAM DIAGRAMA PRESION-TIRO
DIAGRAM PRESSION-TIR DIAGRAMM DRUCK-ZUG

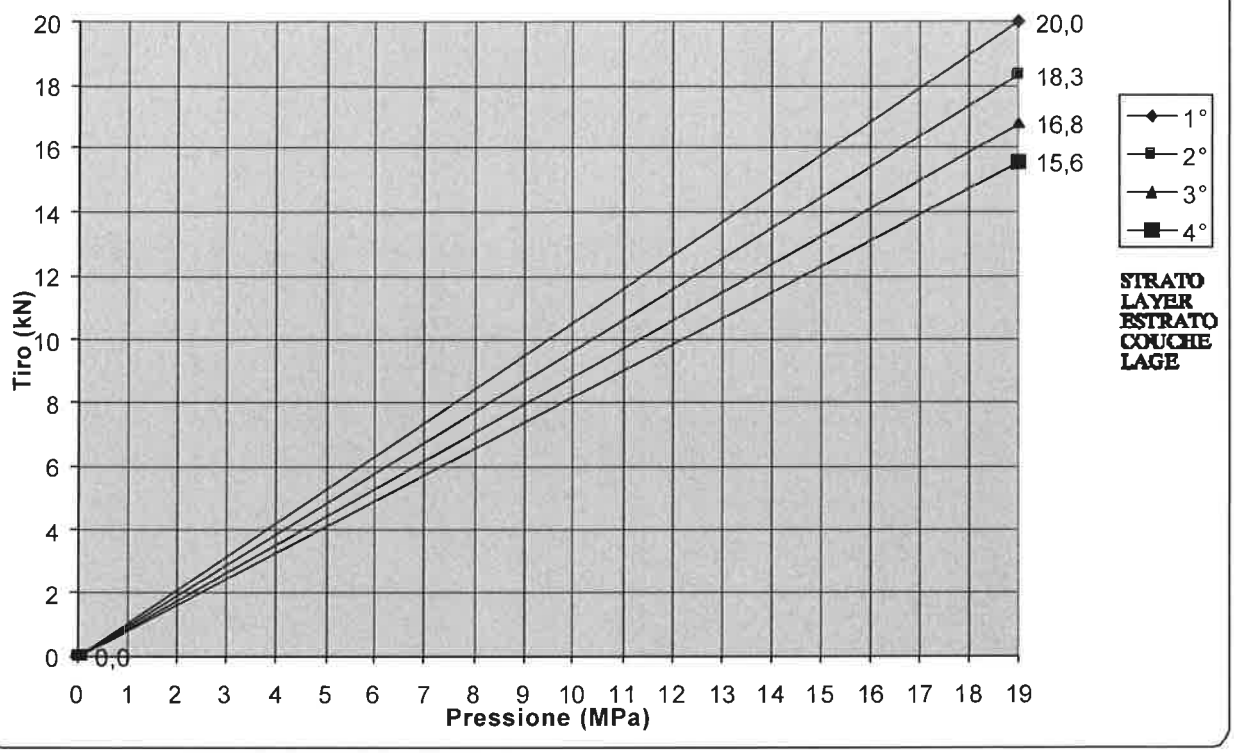

DIAGRAMMA PORTATA-VELOCITA' SPEED-FLOW DIAGRAM DIAGRAMA FLUJO-VELOCIDAD
DIAGRAM DEBIT-VITESSE DIAGRAMM DURCHFLUSSMENGE-GESCHWINDIGKEIT

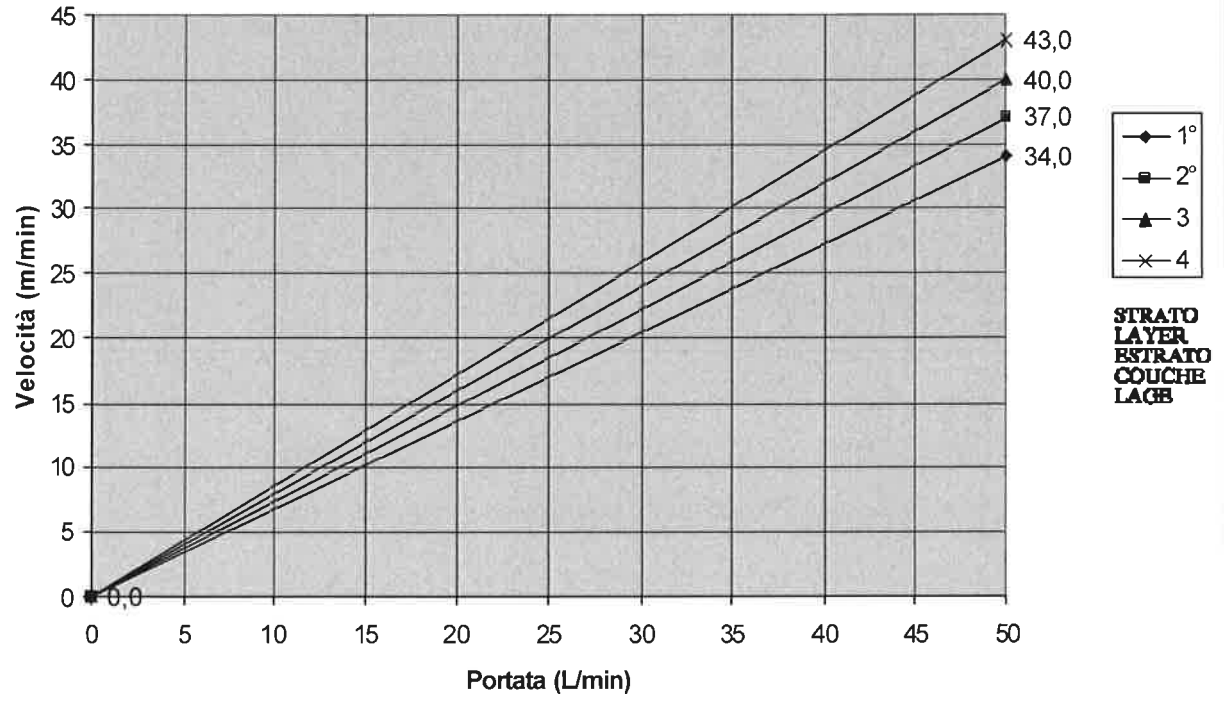

ARGANI VERRICELLI MW 14	CONDIZIONI DI UTILIZZO OPERATING CONDITIONS CONDICIONES DE EMPLEO CONDITIONS D'EMPLOI BETRIEBSBEDINGUNGEN	ALLEGATO N. ATTACHMENT N. ANEXO N. ANNEXE N. ANLAGE N.	2

*Tiro nominale: 13 kN al 3° strato
* Motore idraulico con cilindrata: 125 cc
* Pressione nominale di lavoro: 19 MPa (190 bar) - Pressione massima di funzionamento allo spunto: 20,9 MPa (209 bar)
* Velocità massima di sollevamento : 54 m/min al 4° strato
* Flusso massimo di funzionamento: 50 L/min- Flusso minimo di funzionamento: 10 L/min
* Riduttore epicicloidale con rapporto di riduzione di 1:5,6
* Freno negativo multidisco con coppia statica di: 90 daNm
* Pressione minima di apertura freno: 2,7 MPa (27 bar)- Pressione massima ammissibile nel freno: 30 MPa (300 bar)
* Quantità di fune avvolgibile: 59m Ø 9su 4 strati (DIN 15020)
* Quantità di fune avvolgibile a tamburo pieno: 76 m di fune Ø 9su 5 strati
* Pressione massima ad argano fermo, misurata allo scarico del distributore: 0,5 MPa (5 bar)
* Lubrificazione parti interne con olio - quantità 0,8 kg.
* Fissaggio dell'argano con n°4 viti M14 classe minima 8,8 serrate con coppia di 135 Nm

* Nominal hoisting pull: 13 kN on 3th layer
* Hydraulic motor displacement: 125 cc
* Working pressure: 19 MPa (190 bar) - Maximum starting pressure: 20,9 MPa (209 bar)
* Maximum line speed: 54 m/min on 4th layer
* Maximum working flow: 50 L/min - Minimum working flow: 10 L/min
* Planetary gear reduction ratio: 1:5,6
* Multidisc negative brake, braking static torque: 90 daNm
* Minimum opening brake pressure: 2,7 MPa (27 bar) - Maximum allowable brake pressure: 30 MPa (300 bar)
* Rope storage quantity: 59 m of cable Ø 9 on 4 layers (DIN 15020)
* Maximum storage rope quantity with full drum: 76 m of cable Ø 9 on 5 layers
* Maximum pressure with stopped winch, measured at the distributor exhaust manifold: 0,5 MPa (5 bar)
* Internal lubrication - quantity 0,8 kg.
* Fixing the winch with n°4 screw M14 minimum class 8,8 tightened with a torque of 135 Nm

* Tiro nominal: 13 kN al 3 estrato
* Motor hidráulico con cilindrada: 125 cc
* Presión nominal de trabajo: 19 MPa (190 bar) - Presión máxima de funcionamiento alo arranque: 20,9 MPa (209 bar)
* Velocidad máxima de levantamiento: 54 m/min al 4 estrato
* Flujo máximo de funcionamiento: 50 L/min - Flujo mínimo de funcionamiento: 10 L/min
* Reductor planetario con relación de transmisión 1:5,6
* Freno negativo multidisco con par estatico di: 90 daNm
* Presión mínima de apertura freno: 2,7 MPa (27 bar) - Presión máxima admisible en el freno: 30 MPa (300 bar)
* Cantidad de cable enrollable: 59 m de cable Ø 9 en 4 estratos (DIN 15020)
* Cantitad de cable enrollable con tambor lleno: 76 m de cable Ø 9 en 5 estratos
* Presión máxima a cabrestante parado, medido alo descargue del distribuidor: 0,5 MPa (5 bar)
* Lubricación partes internas con aceite - cantidad 0,8 kg.
* Fijar el cabrestante con n°4 tornillos M14 clase mínima 8,8 y apretarlos con par de 135 Nm

* Trait nominal : 13 kN au 3 couche
* Moteur hydraulique avec cylindrée 125 cc
* Pression nominal de travail :19 MPa (190 bar) - Pression maxime de functionnement au décollage : 20,9 MPa (209 bar)
* Vitesse maxime de levage : 54 m/min au 4 couche
* Flux maxime de functiooement: 50 L/min - Flux minimum de functiooement: 10 L/min
* Réducteur épicycloidal avec rapport de réduction de 1:5,6
* Frein négatif multidisque avec couple statique de : 90 daNm
* Pression minimum ouverture frein : 2,7 MPa (27 bar) - Pression maxime admissible dans le frein: 30 MPa (300 bar)
* Quantité de cable enroulable: 59 m Ø 9 su 4 couches (DIN 15020)
* Quantité de cable enroulable a tambour plein: 76 m Ø 9 su 5 couches
* Pression maxime a treuil ferme, mesurè au décharge du distributeur: 0,5 MPa (5 bar)
* Lubrification parties internes avec huile - quantité 0,8 kg.
* Fixer le treuil avec n.4 vis M 14 classe minime 8,8 et serré le vis avec couple de 135 Nm

* Nennzugkraft: 13 kNbei 3 seillage
* Hydraulimotor mit hubraum: 125 cc
* Nennarbeitsdruck: 19 MPa (190 bar) - Hochstbetriebsdruck bei anlass: 20,9 MPa (209 bar)
* Max. hebegeschwindigkeit: 54 m/min bei 4 seillage
* Max. betriebsdurchfluss: 50 L/min - Min. betriebsdurchfluss: 10 L/min
* Planetenuntersetzungsgetriebe mit untersetzungsverhaltnis von 1:5,6
* Negative lamellenbremse mit stutzmoment von 90 daNm
* Mindestdruck zur bremsenoffnung: 2,7 MPa (27 bar) - In der bremse zulassiger hochstdruck: 30 MPa (300 bar)
* Trommelbare Seilmenge: 59 m Durchm. 9 auf 4 seillage (DIN 15020)
* Trommelbare seilmenge bei vollem trommel: 76 m Durchm. 9 auf 5 seillage
* Hochstdruck bei stehender winde, am auslauf des wegeventils gemessen: 0,5 MPa (5 bar)
* Olschmierung der innenteile - menge: 0,8 kg.
* Befestigung der winde durch 4 schrauben M14 min. klasse 8,8, mit drehmoment von 135 Nm angezogen

ARGANI VERRICELLI MW 18	CONDIZIONI DI UTILIZZO OPERATING CONDITIONS CONDICIONES DE EMPLEO CONDITIONS D'EMPLOI BETRIEBSBEDINGUNGEN	ALLEGATO N. ATTACHMENT N. ANEXO N. ANNEXE N. ANLAGE N.	2

*Tiro nominale: 18 kN al 2° strato
* Motore idraulico con cilindrata: 160 cc
* Pressione nominale di lavoro: 19 MPa (190 bar) - Pressione massima di funzionamento allo spunto: 23 MPa (230 bar)
* Velocità massima di sollevamento : 43 m/min al 4° strato
* Flusso massimo di funzionamento: 50 L/min- Flusso minimo di funzionamento: 10 L/min
* Riduttore epicicloidale con rapporto di riduzione di 1:5,6
* Freno negativo multidisco con coppia statica di: 90 daNm
* Pressione minima di apertura freno: 2,7 MPa (27 bar)- Pressione massima ammissibile nel freno: 30 MPa (300 bar)
* Quantità di fune avvolgibile: 53m Ø 10su 4 strati (DIN 15020)
* Quantità di fune avvolgibile a tamburo pieno: 68 m di fune Ø 10su 5 strati
* Pressione massima ad argano fermo, misurata allo scarico del distributore: 0,5 MPa (5 bar)
* Lubrificazione parti interne con olio - quantità 0,8 kg.
* Fissaggio dell'argano con n°4 viti M14 classe minima 8,8 serrate con coppia di 135 Nm

* Nominal hoisting pull: 18 kN on 2th layer
* Hydraulic motor displacement: 160 cc
* Working pressure: 19 MPa (190 bar) - Maximum starting pressure: 23 MPa (230 bar)
* Maximum line speed: 43 m/min on 4th layer
* Maximum working flow: 50 L/min - Minimum working flow: 10 L/min
* Planetary gear reduction ratio: 1:5,6
* Multidisc negative brake, braking static torque: 90 daNm
* Minimum opening brake pressure: 2,7 MPa (27 bar) - Maximum allowable brake pressure: 30 MPa (300 bar)
* Rope storage quantity: 53 m of cable Ø 10 on 4 layers (DIN 15020)
* Maximum storage rope quantity with full drum: 68 m of cable Ø 10 on 5 layers
* Maximum pressure with stopped winch, measured at the distributor exhaust manifold: 0,5 MPa (5 bar)
* Internal lubrication - quantity 0,8 kg.
* Fixing the winch with n°4 screw M14 minimum class 8,8 tightened with a torque of 135 Nm

* Tiro nominal: 18 kN al 2 estrato
* Motor hidráulico con cilindrada: 160 cc
* Presión nominal de trabajo: 19 MPa (190 bar) - Presión máxima de funcionamiento alo arranque: 23 MPa (230 bar)
* Velocidad máxima de levantamiento: 43 m/min al 4 estrato
* Flujo máximo de funcionamiento: 50 L/min - Flujo mínimo de funcionamiento: 10 L/min
* Reductor planetario con relación de transmisión 1:5,6
* Freno negativo multidisco con par estatico di: 90 daNm
* Presión mínima de apertura freno: 2,7 MPa (27 bar) - Presión máxima admisible en el freno: 30 MPa (300 bar)
* Cantidad de cable enrollable: 53 m de cable Ø 10 en 4 estratos (DIN 15020)
* Cantitad de cable enrollable con tambor lleno: 68 m de cable Ø 10 en 5 estratos
* Presión máxima a cabrestante parado, medido alo descargue del distribuidor: 0,5 MPa (5 bar)
* Lubricación partes internas con aceite - cantidad 0,8 kg.
* Fijar el cabrestante con n°4 tornillos M14 clase mínima 8,8 y apretarlos con par de 135 Nm

* Trait nominal : 18 kN au 2 couche
* Moteur hydraulique avec cylindrée 160 cc
* Pression nominal de travail :19 MPa (190 bar) - Pression maxime de functionnement au décollage : 23 MPa (230 bar)
* Vitesse maxime de levage : 43 m/min au 4 couche
* Flux maxime de functiooement: 50 L/min - Flux minimum de functiooement: 10 L/min
* Réducteur épicycloidal avec rapport de réduction de 1:5,6
* Frein négatif multidisque avec couple statique de : 90 daNm
* Pression minimum ouverture frein : 2,7 MPa (27 bar) - Pression maxime admissible dans le frein: 30 MPa (300 bar)
* Quantité de cable enroulable: 53 m Ø 10 su 4 couches (DIN 15020)
* Quantité de cable enroulable a tambour plein: 68 m Ø 10 su 5 couches
* Pression maxime a treuil ferme, mesurè au décharge du distributeur: 0,5 MPa (5 bar)
* Lubrification parties internes avec huile - quantité 0,8 kg.
* Fixer le treuil avec n.4 vis M 14 classe minime 8,8 et serré le vis avec couple de 135 Nm

* Nennzugkraft: 18 kNbei 2 seillage
* Hydraulimotor mit hubraum: 160 cc
* Nennarbeitsdruck: 19 MPa (190 bar) - Hochstbetriebsdruck bei anlass: 23 MPa (230 bar)
* Max. hebegeschwindigkeit: 43 m/min bei 4 seillage
* Max. betriebsdurchfluss: 50 L/min - Min. betriebsdurchfluss: 10 L/min
* Planetenuntersetzungsgetriebe mit untersetzungsverhaltnis von 1:5,6
* Negative lamellenbremse mit stutzmoment von 90 daNm
* Mindestdruck zur bremsenoffnung: 2,7 MPa (27 bar) - In der bremse zulassiger hochstdruck: 30 MPa (300 bar)
* Trommelbare Seilmenge: 53 m Durchm. 10 auf 4 seillage (DIN 15020)
* Trommelbare seilmenge bei vollem trommel: 68 m Durchm. 10 auf 5 seillage
* Hochstdruck bei stehender winde, am auslauf des wegeventils gemessen: 0,5 MPa (5 bar)
* Olschmierung der innenteile - menge: 0,8 kg.
* Befestigung der winde durch 4 schrauben M14 min. klasse 8,8, mit drehmoment von 135 Nm angezogen

ARGANI VERRICELLI

MW 14 - 18

SCHEMA IDRAULICO GENERALE
BASIC HYDRAULIC DIAGRAM
ESQUEMA HIDRAULICO
SCHEMA HYDRAULIQUE
HYDRAULIKPLAN

ALLEGATO N.
ATTACHMENT N.
ANEXO N.
ANNEXE N.
ANLAGE N.

3

1 ARGANO
2 MOTORE IDRAULICO
3 VALVOLA DI BILANCIAMENTO
4 DISTRIBUTORE DIREZIONALE A CENTRO APERTO

A - SOLLEVAMENTO
B - DISCESA

1 WINCH
2 HYDRAULIC MOTOR
3 COUNTERBALANCE VALVE
4 DIRECTIONAL MAIN VALVE MOTOR SPOOL

A - LIFTING
B - LOWERING

1 CABRESTANTE
2 MOTOR HIDRAULICO
3 VALVULA DE BLOQUEO
4 VALVULA DISTRIBUIDORA DE CENTRO ABIERTO

A - LEVANTAMIENTO
B - DESCENSA

1 TREUIL
2 MOTEUR HYDRAULIQUE
3 SOUPAPE DE CONTROLE DESCENTE
4 DISTRIBUTEUR DIRECTIONNEL EN CIRCUIT OUVERT

A - LEVAGE
B - DESCENTE

1 WINDE
2 HYDRAULIKMOTOR
3 AUSGLEICHVENTIL
4 WEGEVENTIL MIT OFFENER MITTELSTELLUNG

A - HEBEN
B - SENKEN

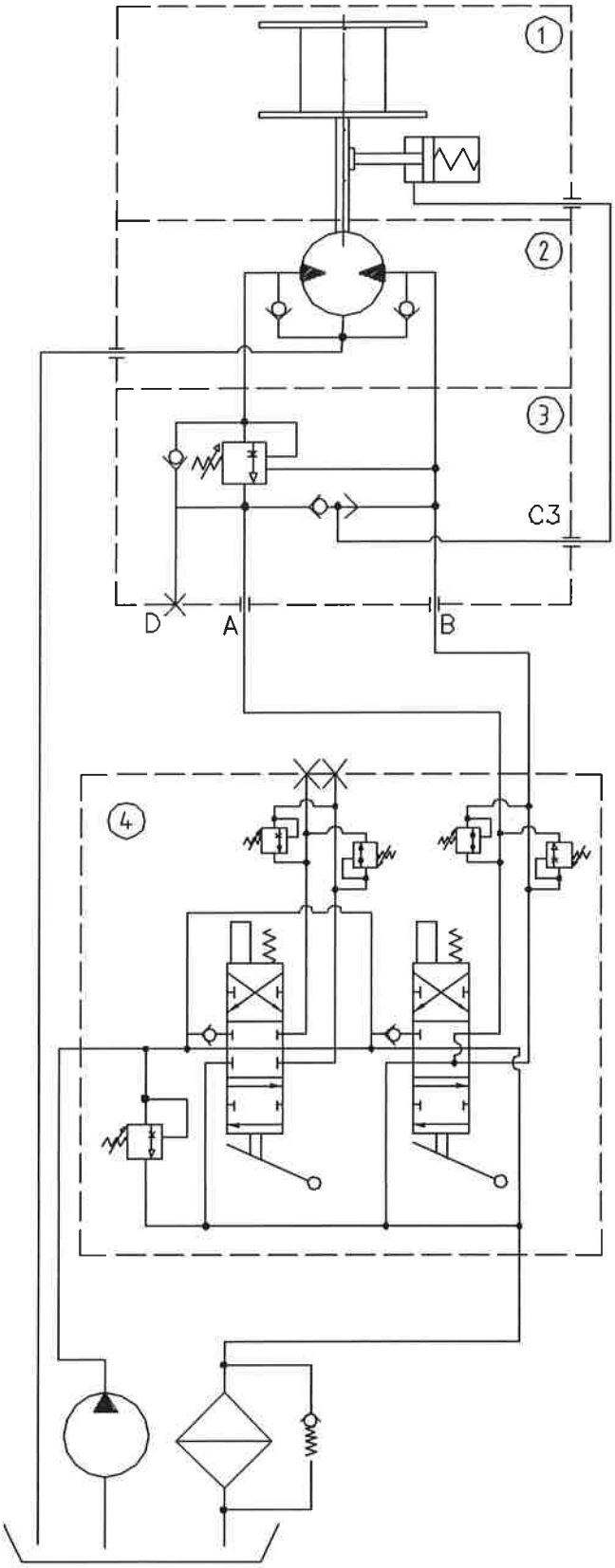

Bilag 3

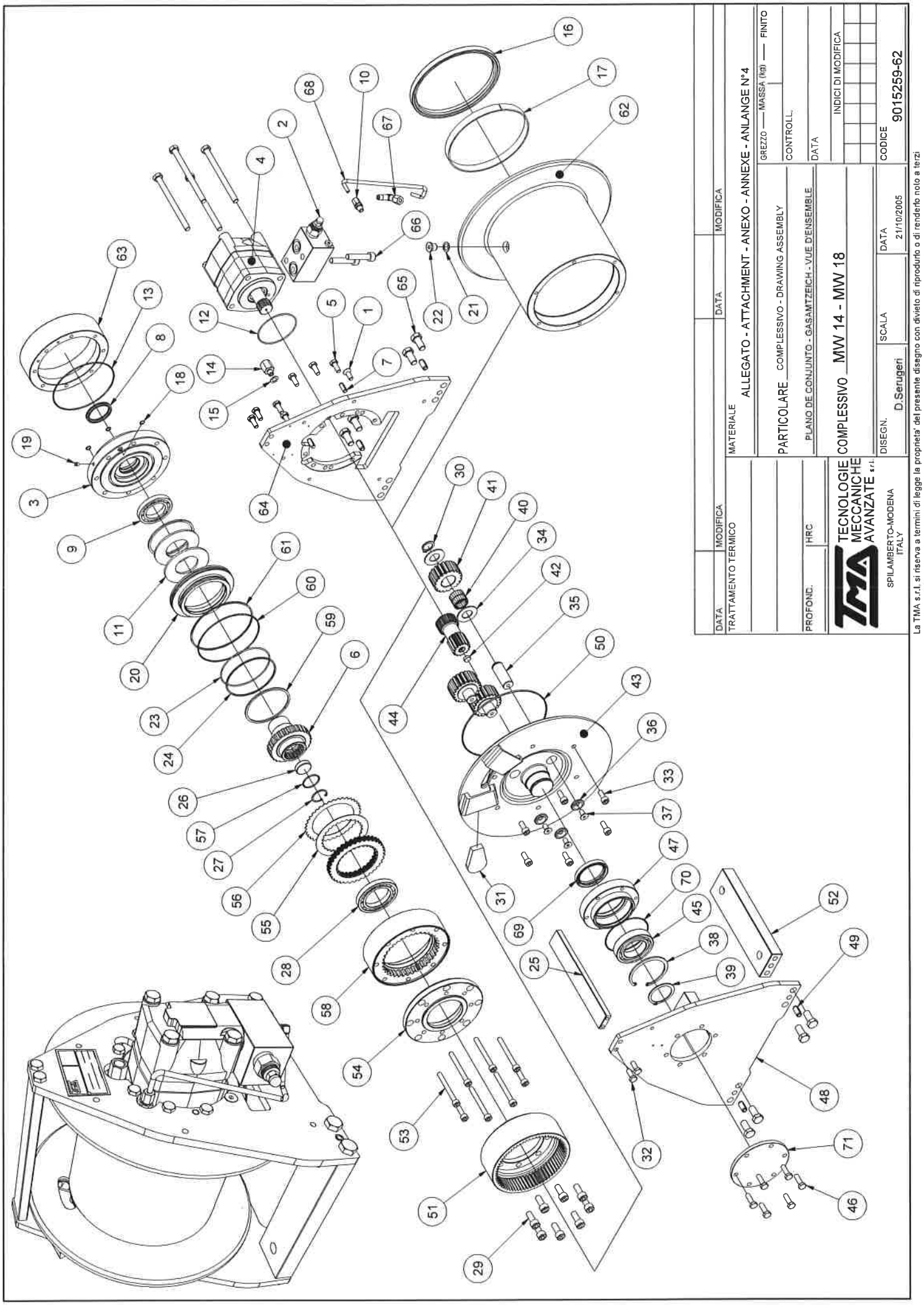
DATA
MODIFICA
TRATTAMENTO TERMICO
MATERIALE
DATA
MODIFICA
ALLEGATO - ATTACHMENT - ANEXO - ANNEXE - ANLANGE N°4
PARTICOLARE COMPLESSIVO - DRAWING ASSEMBLY
PLANO DE CONJUNTO - GASAMTZEICH - VUE D'ENSEMBLE
PROFONC.
HRC
GREZZO — MASSA (kg) — FINITO
CONTROLL.
DATA
INDICI DI MODIFICA
TMA
TECNOLOGIE MECCANICHE AVANZATE s.r.l.
SPILAMBERTO-MODENA ITALY
COMPLESSIVO MW 14 - MW 18
DISEGN. D.Serugeri
SCALA
DATA 21/10/2005
CODICE 9015259-62
La TMA s.r.l. si riserva a termini di legge la proprieta' del presente disegno con divieto di riprodurlo o di renderlo noto a terzi

ARGANI VERRICELLI			LISTA RICAMBI ARGANO: 9.01.52.59 - 62	SPARE PART LIST WINCH: 9.01.52.59 - 62	LISTA REPUESTOS CABRESTANTE: 9.01.52.59 - 62	LISTE PIECES DETACHEES TREUIL: 9.01.52.59 - 62	ERSATZTEILLISTE WINDE: 9.01.52.59 - 62	n°5
POS.	COD.	NR.	DESCRIZIONE	DESCRIPTION	DESCRIPCTION	DESCRIPTION	BESCHREIBUNG	POS.
1	60105007	2	VITE TSPEI 10.9 UNI 5933	SCREW TSPEI 10.9 UNI 5933	TORNILLO UNI 5933	VIS UNI 5933	SCHRAUBE UNI 5933	1
2	61901019	1	VALVOLA DI BILANCIAMENTO	BALANCE VALVE	VALVULA	VANNE	SPERRVENTIL	2
3	10410156	1	FLANGIA DI FISSAGGIO	FIXING FLANGE	ARANDELA DE FIJACION	BRIDE DE FIXATION	BEFESTIGUNGSFLANSCH	3
4	* (MW14-62101061) (MW18-62101062)		MOTORE IDRAULICO	HYDRAULIC MOTOR	MOTOR HIDRAULICO	MOTEUR HYDRAULIQUE	HYDRAULIKMOTOR	4
5	60102008	6	VITE T.E. 10.9 UNI 5739	SCREW T.E. 10.9 UNI 5739	TORNILLO UNI 5739	VIS UNI 5739	SCHRAUBE UNI 5739	5
6	11510041	1	INGRANAGGIO PORTA DISCHI	BRAKE PLATE GEAR	ENGRANAJE PORTADISCOS	ENGRENAGE PORTE-DISQUES	BREMSSCHEIBEN-MITNEHMER	6
7	60601007	2	SPINA ELASTICA UNI 6873	ELASTIC PIN UNI 6873	VASTAGO ELASTICO UNI 6873	GOUPILLE ELASTIQUE UNI 6873	KERBSTIFT UNI 6873	7
8	60305001	1	GUARNIZIONE QUADRING	QUADRING	QUADRING	QUADRING	QUADRING	8
9	60201005	1	CUSCINETTO A SFERE	BALL BEARING	COJINETE A BOLAS	ROULEMENT A BILLES	KUGELLAGER	9
10	62001003	1	RACCORDO CONICO	PIPE FITTING	TUBERIA	RACCORD CONIQUE	KEGELSTUTZEN	10
11	61601015	2	MOLLA A TAZZA	BELLEVILLE SPRING	MUELLE PLANO	RESSORT A DISQUES	TELLERFEDER	11
12	60304005	1	O-RING PER MOTORE	MOTOR O-RING	GUARNICION DEL MOTOR	O-RING POUR MOTEUR	MOTOR O-RING	12
13	60302003	1	GUARNIZIONE O-RING	O-RING	O-RING	O-RING	O-RING	13
14	62003009	1	COLONNETTA CORTA	REDUCTION CONNECTION	RACOR	PETIT RACCORD	KURZE VERBINDUNG	14
15	61001004	1	RONDELLA	WASHER	ARANDELA	RONDELLE	UNTERLEGSCHEIBE	15
16	60902009	1	ANELLO DI TENUTA	OIL SEAL	EMPAQUETADO	BAGUE D'ETANCHEITE	DICHTRING	16
17	60307002	1	ANELLO	RING	ANILLO	BAGUE	RING	17
18	60301013	3	GUARNIZIONE O-RING	O-RING	O-RING	O-RING	O-RING	18
19	61803001	1	TAPPO ESPANSIONE	PLUG	TAPON KOENING EXPANDER	BOUCHON EXPANSIBLE KOENING	SPREIZDECKEL KOENING	19
20	11610047	1	PISTONE FRENO	BRAKE PISTON	PISTON FRENO	PISTON DE FREIN	BREMSKOLBEN	20
21	61001003	1	RONDELLA	WASHER	ARANDELA	RONDELLE	UNTERLEGSCHEIBE	21
22	61801004	1	TAPPO	PLUG	TAPON	BOUCHON	DECKEL	22
23	60302010	1	GUARNIZIONE O-RING	O-RING	O-RING	O-RING	O-RING	23
24	61701003	1	ANELLO ANTIESTRUSIONE	PARBAK RING	ANILLO ANTIEXTRUSION	BAGUE ANTIEXTRUSION	VERSTEIFUNGSRING	24
25	10310064	1	DISTANZIALE SUPPORTI	BRAKET SPACER	RIOSTRA SOPORTES	ENTRETOISE SUPPORTS	HALTER-ABSTANDSTÜCK	25
26	12210005	1	RONDELLA DI RASAMENTO	WASHER	PASTILLA	CALE D'EPAISSEUR	ZWISCHENLEGSCHEIBE	26
27	60401004	1	ANELLO ELASTICO PER FORO DIN 472	RETAINING RING DIN 472	ANILLO ELASTICO DIN 472	JOINT D'ARRET POUR TROU DIN 472	SPRENGRING F. BOHRUNG DIN 472	27
28	60201004	1	CUSCINETTO A SFERE	BALL BEARING	COJINETE A BOLAS	ROULEMENT A BILLES	KUGELLAGER	28
29	60104033	8	VITE TCEI 12.9 UNI 5931	SCREW UNI 5931	TORNILLO UNI 5931	VIS UNI 5931	SCHRAUBE UNI 5931	29
30	60402031	3	ANELLO ELASTICO PER ALBERO DIN 471	RETAINING RING DIN 472	ANILLO ELASTICO DIN 471	JOINT D'ARRET POUR AXE DIN 471	WELLENBORDRING DIN 471	30
31	10610004	1	RADANCIA A GOCCIA	THIMBLE	GUARDACABO	CONE	KEIL	31
32	60102008	4	VITE T.E. 10.9 UNI 5739	SCREW T.E. 10.9 UNI 5739	TORNILLO UNI 5739	VIS UNI 5739	SCHRAUBE UNI 5739	32
33	60104050	6	VITE TCEI 12.9 UNI 5931	SCREW UNI 5931	TORNILLO UNI 5931	VIS UNI 5931	SCHRAUBE UNI 5931	33
34	13310062	6	RONDELLA SATELLITI	WASHER	RONDANA SATELITE	RONDELLE PIVOT SATELLITE	UNTERLEGSCHEIBE BOLZEN PLANETENRAD	34
35	12710357	3	PERNO SATELLITE	PLANET PIN	PIVOTE SATELITE	PIVOT ENGRENAGE PLANETAIRE	PLANETENRADZAPFEN	35
36	13310012	3	RONDELLA	WASHER	ARANDELA	RONDELLE	UNTERLEGSCHEIBE	36
37	60105006	3	VITE TSPEI 10.9 UNI 5933	SCREW TSPEI 10.9 UNI 5933	TORNILLO UNI 5933	VIS UNI 5933	SCHRAUBE UNI 5933	37
38	60401001	1	ANELLO ELASTICO PER FORO DIN 472	RETAINING RING DIN 472	ANILLO ELASTICO DIN 472	JOINT D'ARRET POUR TROU DIN 472	SPRENGRING F. BOHRUNG DIN 472	38
39	60402002	1	ANELLO ELASTICO PER ALBERO DIN 471	RETAINING RING DIN 472	ANILLO ELASTICO DIN 471	JOINT D'ARRET POUR AXE DIN 471	WELLENBORDRING DIN 471	39
40	60208013	114	RULLO CILINDRICO TESTA PIANA	ROLLER	RODILLO	ROULEAU CYLINDRIQUE TETE PLATE	ZYLINDERROLLE MIT FLACHKOPF	40
41	13210024	3	SATELLITE	PLANET	SATELITE	SATELLITE	PLANETENRAD	41
42	30702006	1	PASTIGLIA DI RASAMENTO	TEFLON SHIM	PASTILLA	CALE D'EPAISSEUR	ZWISCHENLEGSCHEIBE	42
43	19811281	1	FIANCATA LATO RIDUTTORE	GEAR SIDE FLANGE	FLANCO LADO REDUCTOR	FLANC COTE REDUCTEUR	SEITENWAND GETRIEBENSEITIG	43
44	12110081	1	ALBERO SOLARE	SUN GEAR	EJE SOLAR	AXE PLANETAIRE	SONNENWELLE	44
45	60202018	1	CUSCINETTO A SFERE	BALL BEARING	COJINETE A BOLAS	ROULEMENT A BILLES	KUGELLAGER	45
46	60102035	6	VITE T.E. 10.9 UNI 5739	SCREW T.E. 10.9 UNI 5739	TORNILLO UNI 5739	VIS UNI 5739	SCHRAUBE UNI 5739	46
47	12510052	1	FLANGIA FISSAGGIO CUSCINETTO	BEARING FIXING FLANGE	ARANDELA DE FIJACION COJINETE	BRIDE DE FIXATION ROULEMENT	LAGERBEFESTIGUNGSFLANSCH	47
48	13610057	1	SUPPORTO LATO RIDUTTORE	GEAR SIDE BRACKET	SOPORTE LADO REDUCTOR	SUPPORT COTE REDUCTEUR	HALTER GETRIEBENSEITIG	48
49	60601009	4	SPINA ELASTICA UNI 6873	ELASTIC PIN UNI 6873	VASTAGO ELASTICO UNI 6873	GOUPILLE ELASTIQUE UNI 6873	KERBSTIFT UNI 6873	49
50	60302032	1	GUARNIZIONE O-RING	O-RING	O-RING	O-RING	O-RING	50
51	11810025	1	CORONA RIDUTTORE	INTERNAL GEAR	RUEDA REDUCTOR	COURONNE REDUCTEUR	GETRIEBENKRANZ	51
52	13710106	2	PIATTO DI FISSAGGIO	FIXING PLATE	PLATO DE FIJACION	PLATEAU DE FIXATION	BEFESTIGUNGSPLATTE	52
53	60104101	8	VITE TCEI 12.9 UNI 5931	SCREW UNI 5931	TORNILLO UNI 5931	VIS UNI 5931	SCHRAUBE UNI 5931	53
54	11010372	1	ANELLO CHIUSURA FRENO	BRAKE CLOSER RING	ANILLO DE CIERRE FRENO	BAGUE DE FERMETURE FREIN	BREMSVERSCHLUSSRING	54
55	60801011	7	DISCO	BRAKE PLATE	DISCO	DISQUE DE FREIN	BREMSSCHEIBE	55
56	60801004	8	CONTRODISCO	DIVIDER PLATE	CONTRADISCO	CONTRE-DISQUE	GEGENSCHEIBE	56
57	60302009	1	GUARNIZIONE O-RING	O-RING	O-RING	O-RING	O-RING	57
58	19820021	1	GRUPPO CORPO FRENO	BRAKE HOUSING	GRUPO CUERPO FRENO	GROUPE CORPS FREIN	BREMSAGGREGAT	58
59	60502015	2	ANELLO DI SPALLAMENTO PER FORO	RETAINING RING	ANILLO ELASTICO	BAGUE D'EPAULEMENT POUR TROU	BORDRING F. BOHRUNG	59
60	60302003	1	GUARNIZIONE O-RING	O-RING	O-RING	O-RING	O-RING	60
61	61701001	1	ANELLO ANTIESTRUSIONE	PARBAK RING	ANILLO ANTIEXTRUSION	BAGUE ANTIEXTRUSION	VERSTEIFUNGSRING	61
62	19812195	1	TAMBURO	DRUM	TAMBOR	TAMBOUR	TROMMEL	62
63	11010217	1	ANELLO SUPPORTO TAMBURO	DRUM RING	ANILLO SUPORTE TAMBOR	BAGUE SUPPORT TAMBOUR	TROMMELRING	63
64	13610058	1	SUPPORTO LATO MOTORE	MOTOR SIDE BRACKET	SOPORTE LADO MOTOR	SUPPORT COTE MOTEUR	HALTER MOTORSEITIG	64
65	60102001	8	VITE T.E. 10.9 UNI 5739	SCREW T.E. 10.9 UNI 5739	TORNILLO UNI 5739	VIS UNI 5739	SCHRAUBE UNI 5739	65
66	60104045	2	VITE TCEI 12.9 UNI 5931	SCREW UNI 5931	TORNILLO UNI 5931	VIS UNI 5931	SCHRAUBE UNI 5931	66
67	62001001	1	RACCORDO CONICO	PIPE FITTING	TUBERIA	RACCORD CONIQUE	KEGELSTUTZEN	67
68	12910054	1	TUBO DI COLLEGAMENTO	BRAKE PIPE	TUBO DE CONEXION	TUYAU DE CONNEXION	ANSCHLUSSROHR	68
69	60902025	1	ANELLO DI TENUTA	OIL SEAL	EMPAQUETADO	BAGUE D'ETANCHEITE	DICHTRING	69
70	60301008	1	GUARNIZIONE O-RING	O-RING	O-RING	O-RING	O-RING	70
71	11010215	1	COPERCHIO CUSCINETTO	COVER BEARING	TAPA POR COJINETE DE BOLAS	COUVERCLE ROULEMENT	LAGERDECKEL	71

ARGANI VERRICELLI

MW 14-18

MOVIMENTAZIONE ARGANO
WINCH HANDLING
MOVILIZACION DEL CABRESTANTE
MANUTENTION TREUIL
BETRIEBSBEDINGUNGEN

ALLEGATO N.
ATTACHMENT N.
ANEXO N.
ANNEXE N.
ANLAGE N.

6

MOVIMENTAZIONE SENZA PALLET
HANDLING WITHOUT PALLET
MOVILIZACION SIN PALLET
MANUTENTION SANS PALETTE
BEWEGUNG OHNE PALETTE

PRESA PER SOLLEVAMENTO
HOISTING POINT
AGARRE POR LEVANTAMIENTO
PRISE DE LEVAGE
ABTRIEB ZUM HEBEN

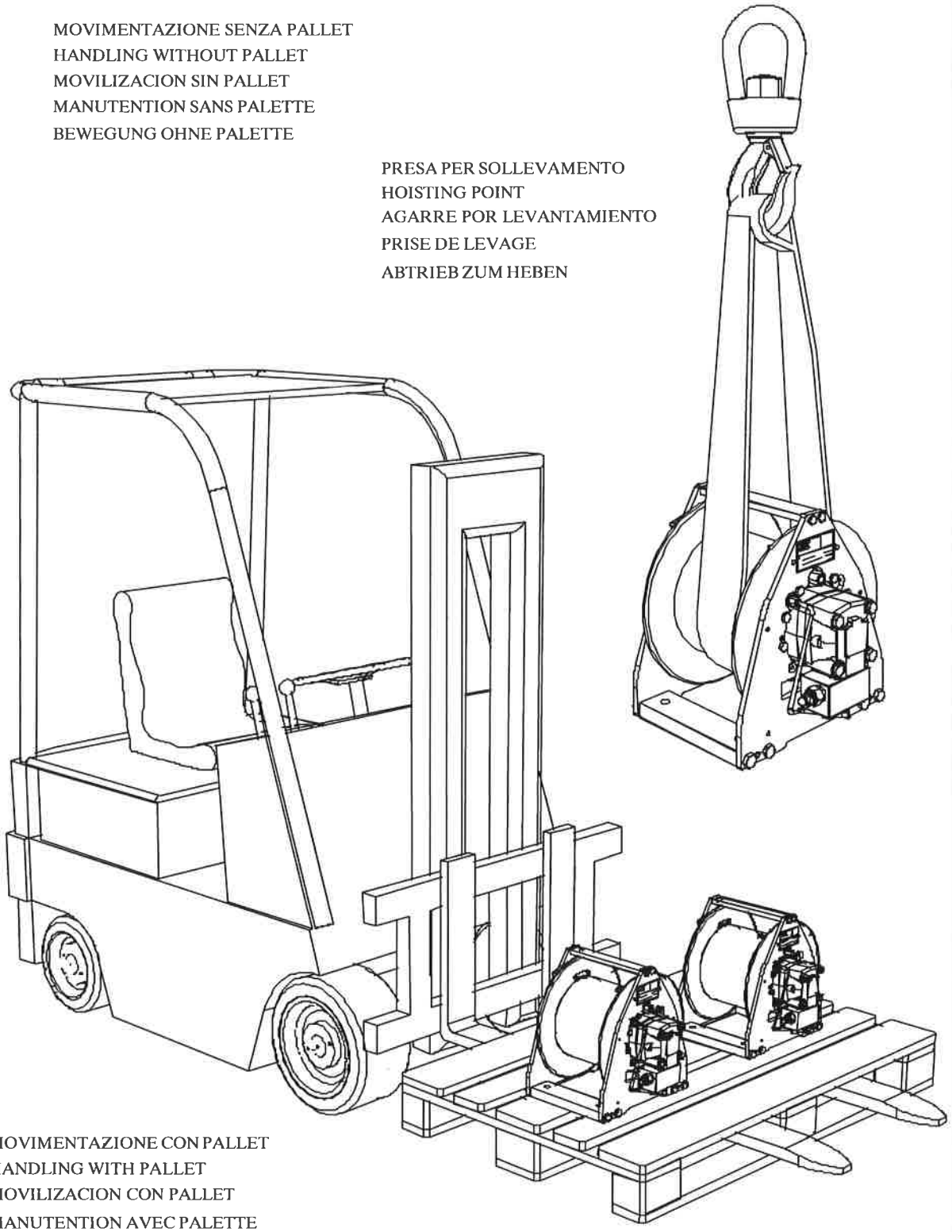

MOVIMENTAZIONE CON PALLET
HANDLING WITH PALLET
MOVILIZACION CON PALLET
MANUTENTION AVEC PALETTE
BEWEGUNG MIT PALETTE

ARGANI VERRICELLI

MW 22

PESO E DIMENSIONI
WEIGHT AND SIZES
PESO Y DIMENSIONES
POIDS ET DIMENSION
GEWICHT UND ABMESSUNGEN

ALLEGATO N.
ATTACHMENT N.
ANEXO N.
ANNEXE N.
ANLAGE N.

1

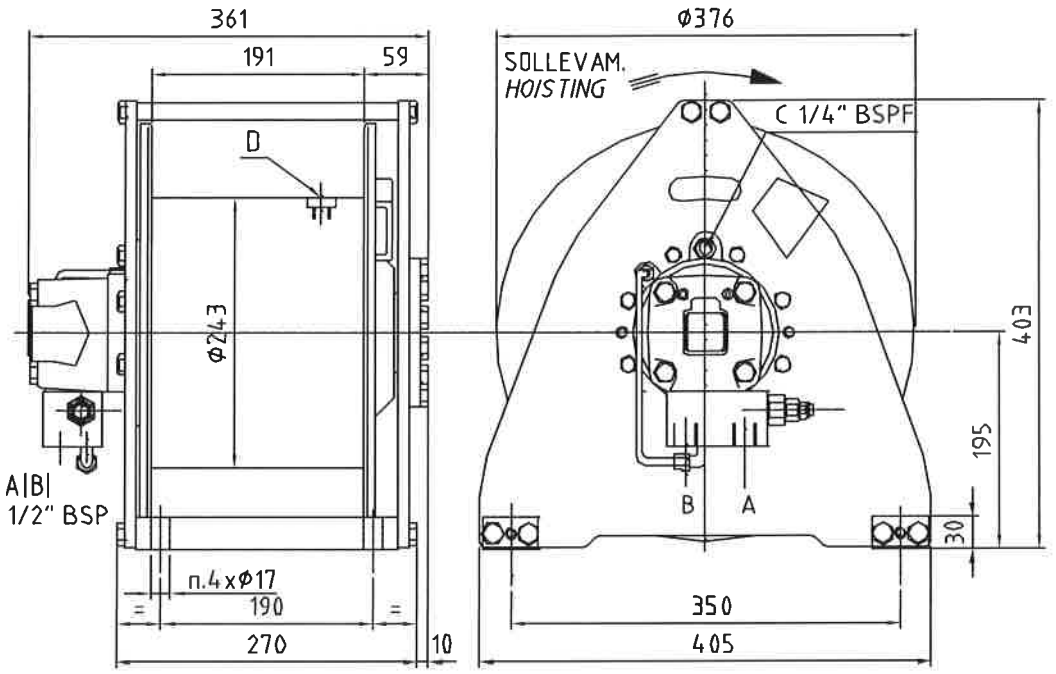

MASSA - WEIGHT - MASA - MASS - GEWICHT: kg 95

ANGOLI DI UTILIZZO - OPERATING ANGLES - ANGULOS DE EMPLEO - ANGLES D'EMPLOI - EINSATZWINKEL

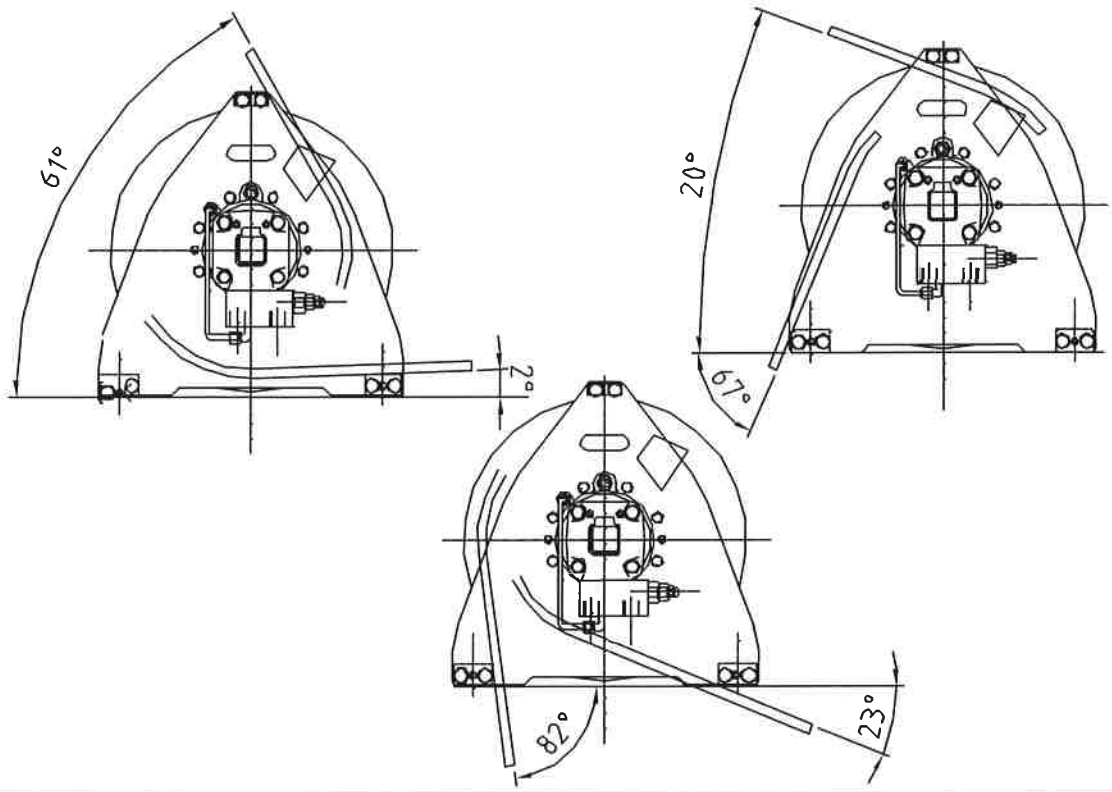

ARGANI VERRICELLI

MW 22

CONDIZIONI DI UTILIZZO
OPERATING CONDITIONS
CONDICIONES DE EMPLEO
CONDITIONS D'EMPLOI
BETRIEBSBEDINGUNGEN

ALLEGATO N.
ATTACHMENT N.
ANEXO N.
ANNEXE N.
ANLAGE N.

2

DIAGRAMMA PRESSIONE-TIRO PULL-PRESSURE DIAGRAM DIAGRAMA PRESION-TIRO
DIAGRAM PRESSION-TIR DIAGRAMM DRUCK-ZUG

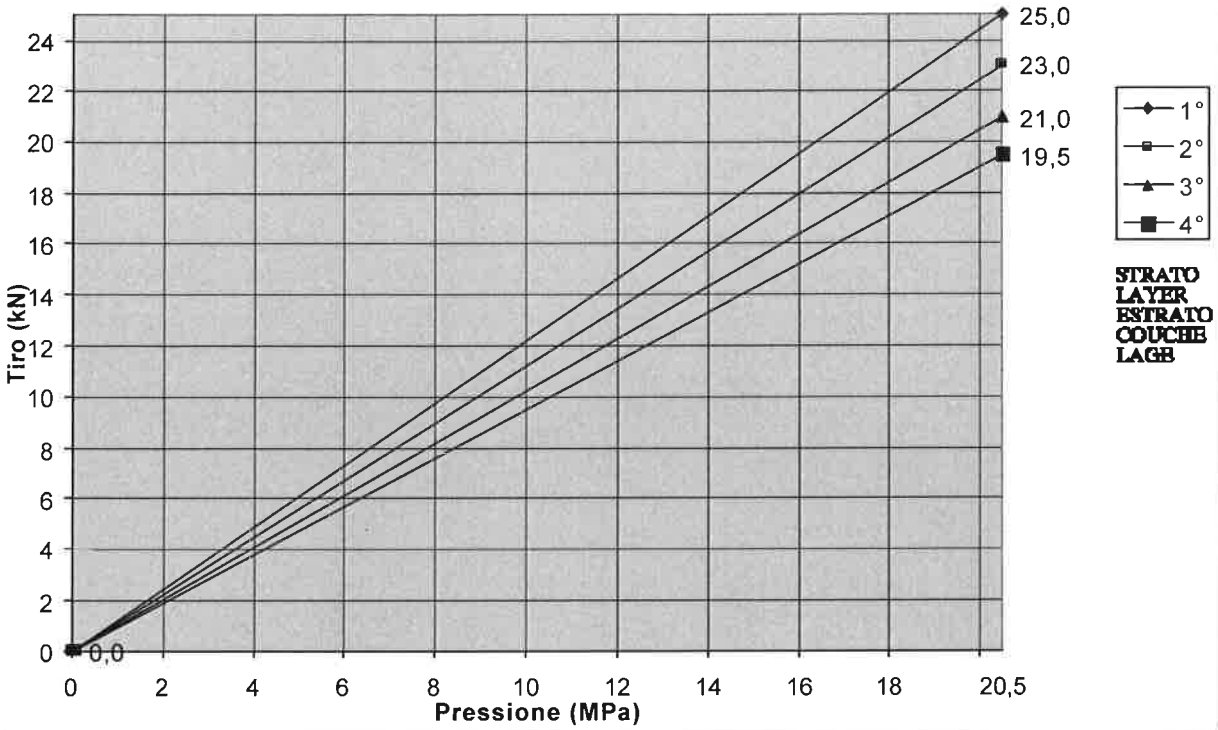

DIAGRAMMA PORTATA-VELOCITA' SPEED-FLOW DIAGRAM DIAGRAMA FLUJO-VELOCIDAD
DIAGRAM DEBIT-VITESSE DIAGRAMM DURCHFLUSSMENGE-GESCHWINDIGKEIT

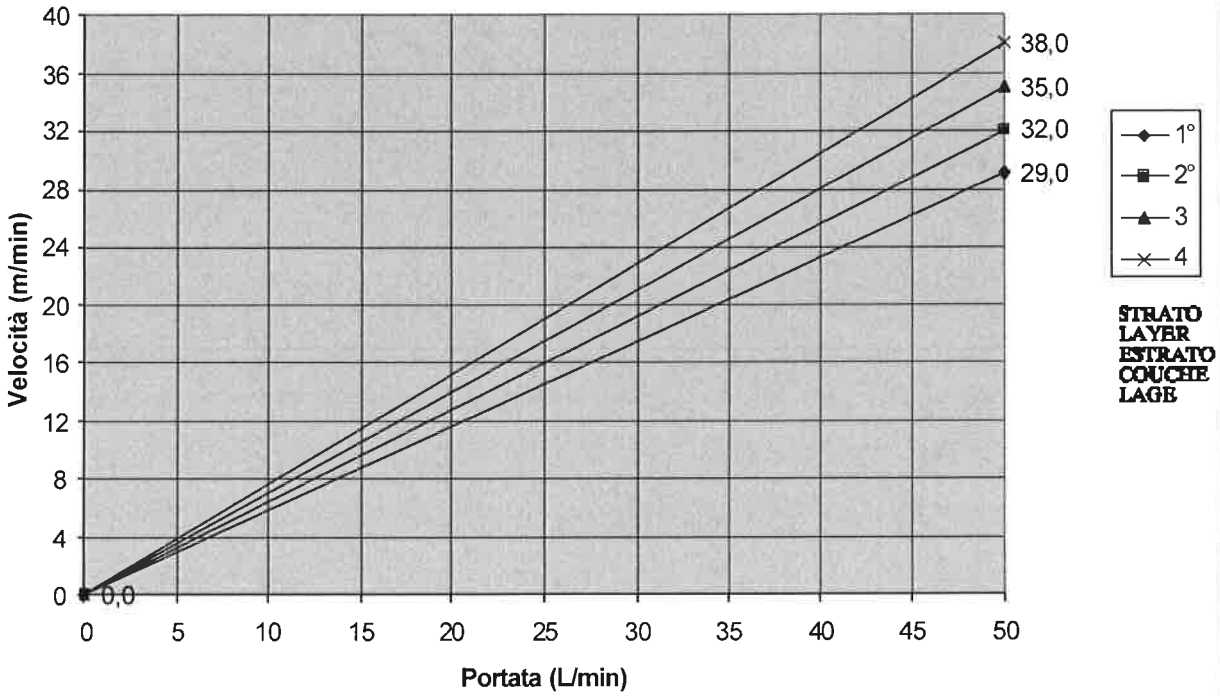

ARGANI VERRICELLI MW 22	CONDIZIONI DI UTILIZZO OPERATING CONDITIONS CONDICIONES DE EMPLEO CONDITIONS D'EMPLOI BETRIEBSBEDINGUNGEN	ALLEGATO N. ATTACHMENT N. ANEXO N. ANNEXE N. ANLAGE N.	2

*Tiro nominale: 22 kN al 2° strato
* Motore idraulico con cilindrata: 200 cc
* Pressione nominale di lavoro: 20,5 MPa (205 bar) - Pressione massima di funzionamento allo spunto: 21,5 MPa (215 bar)
* Velocità massima di sollevamento : 38 m/min al 4° strato
* Flusso massimo di funzionamento: 50 L/min- Flusso minimo di funzionamento: 10 L/min
* Riduttore epicicloidale con rapporto di riduzione di 1:6,25
* Freno negativo multidisco con coppia statica di: 90 daNm
* Pressione minima di apertura freno: 2,7 MPa (27 bar)- Pressione massima ammissibile nel freno: 30 MPa (300 bar)
* Quantità di fune avvolgibile: 54m Ø 12su 4 strati (DIN 15020)
* Quantità di fune avvolgibile a tamburo pieno: 69 m di fune Ø 12su 5 strati
* Pressione massima ad argano fermo, misurata allo scarico del distributore: 0,5 MPa (5 bar)
* Lubrificazione parti interne con olio - quantità 2 kg.
* Fissaggio dell'argano con n°4 viti M16 classe minima 8,8 serrate con coppia di 210 Nm

* Nominal hoisting pull: 22 kN on 2th layer
* Hydraulic motor displacement: 200 cc
* Working pressure: 20,5 MPa (205 bar) - Maximum starting pressure: 21,5 MPa (215 bar)
* Maximum line speed: 38 m/min on 4th layer
* Maximum working flow: 50 L/min - Minimum working flow: 10 L/min
* Planetary gear reduction ratio: 1:6,25
* Multidisc negative brake, braking static torque: 90 daNm
* Minimum opening brake pressure: 2,7 MPa (27 bar) - Maximum allowable brake pressure: 30 MPa (300 bar)
* Rope storage quantity: 54 m of cable Ø 12 on 4 layers (DIN 15020)
* Maximum storage rope quantity with full drum: 69 m of cable Ø 12 on 5 layers
* Maximum pressure with stopped winch, measured at the distributor exhaust manifold: 0,5 MPa (5 bar)
* Internal lubrication - quantity 2 kg.
* Fixing the winch with n°4 screw M16 minimum class 8,8 tightened with a torque of 210 Nm

* Tiro nominal: 22 kN al 2 estrato
* Motor hidráulico con cilindrada: 200 cc
* Presión nominal de trabajo: 20,5 MPa (205 bar) - Presión máxima de funcionamiento alo arranque: 21,5 MPa (215 bar)
* Velocidad máxima de levantamiento: 38 m/min al 4 estrato
* Flujo máximo de funcionamiento: 50 L/min - Flujo mínimo de funcionamiento: 10 L/min
* Reductor planetario con relación de transmisión 1:6,25
* Freno negativo multidisco con par estatico di: 90 daNm
* Presión mínima de apertura freno: 2,7 MPa (27 bar) - Presión máxima admisible en el freno: 30 MPa (300 bar)
* Cantidad de cable enrollable: 54 m de cable Ø 12 en 4 estratos (DIN 15020)
* Cantitad de cable enrollable con tambor lleno: 69 m de cable Ø 12 en 5 estratos
* Presión máxima a cabrestante parado, medido alo descargue del distribuidor: 0,5 MPa (5 bar)
* Lubricación partes internas con aceite - cantidad 2 kg.
* Fijar el cabrestante con n°4 tornillos M16 clase mínima 8,8 y apretarlos con par de 210 Nm

* Trait nominal : 22 kN au 2 couche
* Moteur hydraulique avec cylindrée 200 cc
* Pression nominal de travail :20,5 MPa (205 bar) - Pression maxime de functionnement au décollage : 21,5 MPa (215 bar)
* Vitesse maxime de levage : 38 m/min au 4 couche
* Flux maxime de functiooement: 50 L/min - Flux minimum de functiooement: 10 L/min
* Réducteur épicycloidal avec rapport de réduction de 1:6,25
* Frein négatif multidisque avec couple statique de : 90 daNm
* Pression minimum ouverture frein : 2,7 MPa (27 bar) - Pression maxime admissible dans le frein: 30 MPa (300 bar)
* Quantité de cable enroulable: 54 m Ø 12 su 4 couches (DIN 15020)
* Quantité de cable enroulable a tambour plein: 69 m Ø 12 su 5 couches
* Pression maxime a treuil ferme, mesurè au décharge du distributeur: 0,5 MPa (5 bar)
* Lubrification parties internes avec huile - quantité 2 kg.
* Fixer le treuil avec n.4 vis M 16 classe minime 8,8 et serré le vis avec couple de 210 Nm

* Nennzugkraft: 22 kNbei 2 seillage
* Hydraulimotor mit hubraum: 200 cc
* Nennarbeitsdruck: 20,5 MPa (205 bar) - Hochstbetriebsdruck bei anlass: 21,5 MPa (215 bar)
* Max. hebegeschwindigkeit: 38 m/min bei 4 seillage
* Max. betriebsdurchfluss: 50 L/min - Min. betriebsdurchfluss: 10 L/min
* Planetenuntersetzungsgetriebe mit untersetzungsverhaltnis von 1:6,25
* Negative lamellenbremse mit stutzmoment von 90 daNm
* Mindestdruck zur bremsenoffnung: 2,7 MPa (27 bar) - In der bremse zulassiger hochstdruck: 30 MPa (300 bar)
* Trommelbare Seilmenge: 54 m Durchm. 12 auf 4 seillage (DIN 15020)
* Trommelbare seilmenge bei vollem trommel: 69 m Durchm. 12 auf 5 seillage
* Hochstdruck bei stehender winde, am auslauf des wegeventils gemessen: 0,5 MPa (5 bar)
* Olschmierung der innenteile - menge: 2 kg.
* Befestigung der winde durch 4 schrauben M16 min. klasse 8,8, mit drehmoment von 210 Nm angezogen

Bilag 3

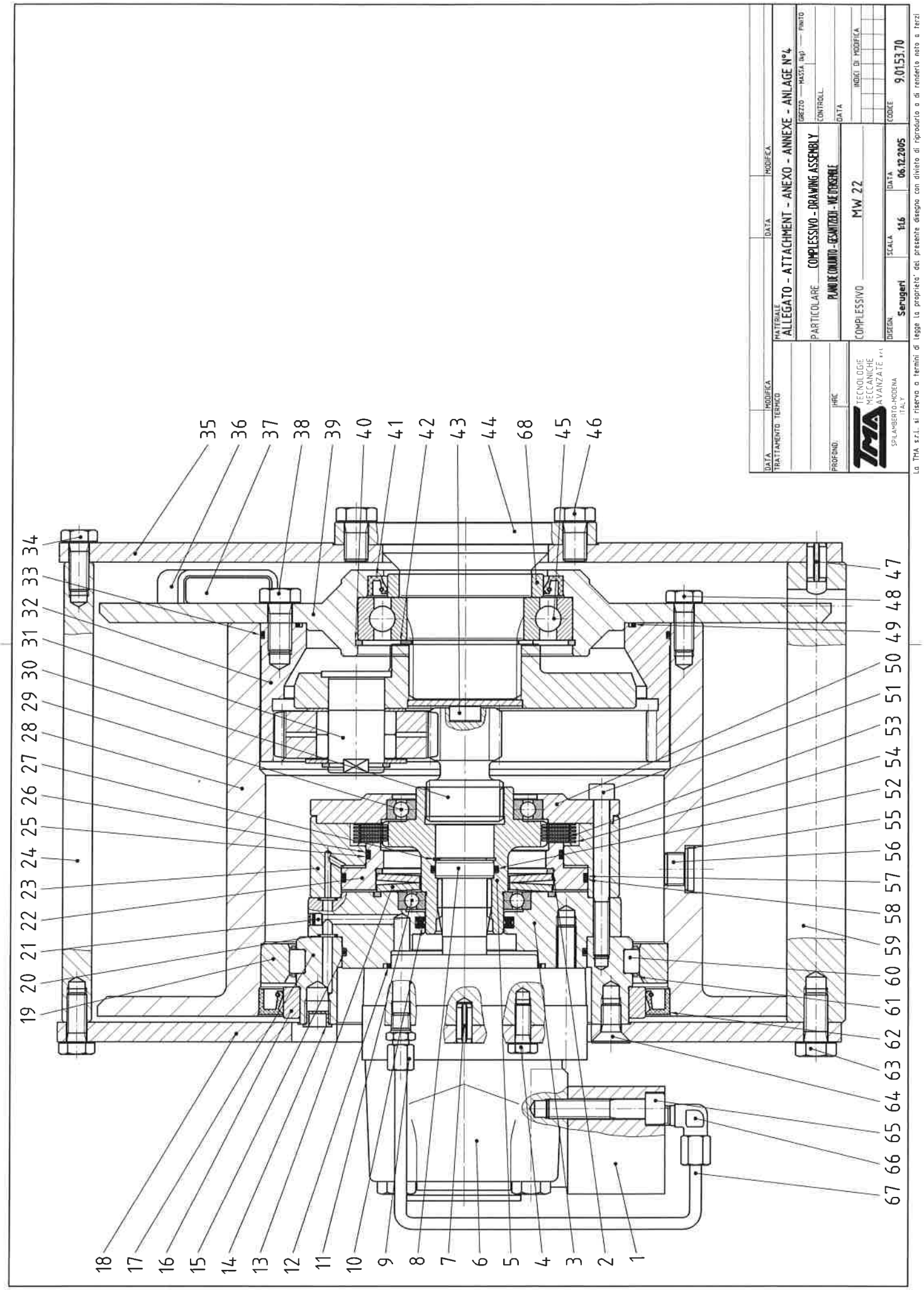

DATA
MODIFICA
TRATTAMENTO TERMICO
MATERIALE
ALLEGATO - ATTACHMENT - ANEXO - ANNEXE - ANLAGE N°4
PARTICOLARE
COMPLESSIVO - DRAWING ASSEMBLY
PLANO DE CONJUNTO - GESAMTZEICH - VUE D'ENSEMBLE
COMPLESSIVO
MW 22
GREZZO
MASSA (kg)
FINITO
CONTROLL.
INDICI DI MODIFICA
CODICE
9.01.53.70
DISEGN.
Serugeri
SCALA
1:1.6
DATA
06.12.2005
PROFOND.
HRC
TECNOLOGIE MECCANICHE AVANZATE s.r.l.
SPILAMBERTO-MODENA ITALY
La TMA s.r.l. si riserva a termini di legge la proprieta' del presente disegno con divieto di riprodurlo o di renderlo noto a terzi

ARGANI VERRICELLI

LISTA RICAMBI ARGANO: 9.01.53.70	SPARE PART LIST WINCH: 9.01.53.70	LISTA REPUESTOS CABRESTANTE: 9.01.53.70	LISTE PIECES DETACHEES TREUIL: 9.01.53.70	ERSATZTEILLISTE WINDE: 9.01.53.70	n°5

POS.	COD.	NR.	DESCRIZIONE	DESCRIPTION	DESCRIPCTION	DESCRIPTION	BESCHREIBUNG	POS.
1	61901019	1	VALVOLA DI BILANCIAMENTO	BALANCE VALVE	VALVULA	VANNE	SPERRVENTIL	1
2	60502015	2	ANELLO DI SPALLAMENTO PER FORO	RETAINING RING	ANILLO ELASTICO	BAGUE D'EPAULEMENT POUR TROU	BORDRING F. BOHRUNG	2
3	10410156	1	FLANGIA DI FISSAGGIO	FIXING FLANGE	ARANDELA DE FIJACION	BRIDE DE FIXATION	BEFESTIGUNGSFLANSCH	3
4	60102026	6	VITE T.E. 10.9 UNI 5739	SCREW T.E. 10.9 UNI 5739	TORNILLO UNI 5739	VIS UNI 5739	SCHRAUBE UNI 5739	4
5	11510041	1	INGRANAGGIO PORTA DISCHI	BRAKE PLATE GEAR	ENGRANAJE PORTADISCOS	ENGRENAGE PORTE-DISQUES	BREMSSCHEIBEN-MITNEHMER	5
6	62101063	1	MOTORE IDRAULICO	HYDRAULIC MOTOR	MOTOR HIDRAULICO	MOTEUR HYDRAULIQUE	HYDRAULIKMOTOR	6
7	60601009	2	SPINA ELASTICA UNI 6873	ELASTIC PIN UNI 6873	VASTAGO ELASTICO UNI 6873	GOUPILLE ELASTIQUE UNI 6873	KERBSTIFT UNI 6873	7
8	12210005	1	RONDELLA DI RASAMENTO	WASHER	PASTILLA	CALE D'EPAISSEUR	ZWISCHENLEGSCHEIBE	8
9	62001003	1	RACCORDO CONICO	PIPE FITTING	TUBERIA	RACCORD CONIQUE	KEGELSTUTZEN	9
10	60305001	1	GUARNIZIONE QUADRING	QUADRING	QUADRING	QUADRING	QUADRING	10
11	60201005	1	CUSCINETTO A SFERE	BALL BEARING	COJINETE A BOLAS	ROULEMENT A BILLES	KUGELLAGER	11
12	60304005	1	O-RING PER MOTORE	MOTOR O-RING	GUARNICION DEL MOTOR	O-RING POUR MOTEUR	MOTOR O-RING	12
13	61601015	2	MOLLA A TAZZA	BELLEVILLE SPRING	MUELLE PLANO	RESSORT A DISQUES	TELLERFEDER	13
14	61802002	1	TAPPO	PLUG	TAPON	BOUCHON	DECKEL	14
15	60302003	1	GUARNIZIONE O-RING	O-RING	O-RING	O-RING	O-RING	15
16	11010219	1	ANELLO PER TENUTA	OIL SEAL RING	EMPAQUETADO	BAGUE D'ETANCHEITE	DICHTRING	16
17	11010218	1	ANELLO SUPPORTO TAMBURO	DRUM RING	ANILLO SUPORTE TAMBOR	BAGUE SUPPORT TAMBOUR	TROMMELRING	17
18	13610059	1	SUPPORTO LATO MOTORE	MOTOR SIDE BRACKET	SOPORTE LADO MOTOR	SUPPORT COTE MOTEUR	HALTER MOTORSEITIG	18
19	11010220	1	PISTA ROTOLAMENTO RULLI	BEARING EXTERNAL RING	PISTA RODILLOS	SURFACE DE ROULEMENT ROULEAUX	ROLLENLAUFRING	19
20	60301013	3	GUARNIZIONE O-RING	O-RING	O-RING	O-RING	O-RING	20
21	61803001	1	TAPPO ESPANSIONE	PLUG	TAPON KOENING EXPANDER	BOUCHON EXPANSIBLE KOENING	SPREIZDECKEL KOENING	21
22	11610047	1	PISTONE FRENO	BRAKE PISTON	PISTON FRENO	PISTON DE FREIN	BREMSKOLBEN	22
23	19820021	1	GRUPPO CORPO FRENO	BRAKE HOUSING	GRUPO CUERPO FRENO	GROUPE CORPS FREIN	BREMSAGGREGAT	23
24	10310065	1	DISTANZIALE SUPPORTI	BRAKET SPACER	RIOSTRA SOPORTES	ENTRETOISE SUPPORTS	HALTER-ABSTANDSTÜCK	24
25	60302010	1	GUARNIZIONE O-RING	O-RING	O-RING	O-RING	O-RING	25
26	61701003	1	ANELLO ANTIESTRUSIONE	PARBAK RING	ANILLO ANTIEXTRUSION	BAGUE ANTIEXTRUSION	VERSTEIFUNGSRING	26
27	60401004	1	ANELLO ELASTICO PER FORO DIN 472	RETAINING RING DIN 472	ANILLO ELASTICO DIN 472	JOINT D'ARRET POUR TROU DIN 472	SPRENGRING F. BOHRUNG DIN 472	27
28	19812197	1	TAMBURO	DRUM	TAMBOR	TAMBOUR	TROMMEL	28
29	60201004	1	CUSCINETTO A SFERE	BALL BEARING	COJINETE A BOLAS	ROULEMENT A BILLES	KUGELLAGER	29
30	12110069	1	ALBERO SOLARE	SUN GEAR	EJE SOLAR	AXE PLANETAIRE	SONNENWELLE	30
31	61402030	1	GRUPPO RIDUZIONE	PLANET HUB	GRUPO REDUCCION	GROUPE REDUCTEUR	PLANETENGETRIEBE	31
32	11810013	1	CORONA RIDUTTORE	INTERNAL GEAR	RUEDA REDUCTOR	COURONNE REDUCTEUR	GETRIEBENKRANZ	32
33	60302036	1	GUARNIZIONE O-RING	O-RING	O-RING	O-RING	O-RING	33
34	60102023	4	VITE T.E. 10.9 UNI 5739	SCREW T.E. 10.9 UNI 5739	TORNILLO UNI 5739	VIS UNI 5739	SCHRAUBE UNI 5739	34
35	13610060	1	SUPPORTO LATO RIDUTTORE	GEAR SIDE BRACKET	SOPORTE LADO REDUCTOR	SUPPORT COTE REDUCTEUR	HALTER GETRIEBENSEITIG	35
36	10504001	2	TASCA PORTA RADANCIA	THIMBLE POCKET	SEDE DEL GUARDACABO	BOITE A CONE	KEILKASTEN	36
37	10610005	1	RADANCIA A GOCCIA	THIMBLE	GUARDACABO	CONE	KEIL	37
38	60102001	8	VITE T.E. 10.9 UNI 5739	SCREW T.E. 10.9 UNI 5739	TORNILLO UNI 5739	VIS UNI 5739	SCHRAUBE UNI 5739	38
39	19811178	1	FIANCATA LATO RIDUTTORE	GEAR SIDE FLANGE	FLANCO LADO REDUCTOR	FLANC COTE REDUCTEUR	SEITENWAND GETRIEBENSEITIG	39
40	60502003	1	ANELLO DI SPALLAMENTO PER FORO	RETAINING RING	ANILLO ELASTICO	BAGUE D'EPAULEMENT POUR TROU	BORDRING F. BOHRUNG	40
41	60902020	1	ANELLO DI TENUTA	OIL SEAL	EMPAQUETADO	BAGUE D'ETANCHEITE	DICHTRING	41
42	60402007	1	ANELLO ELASTICO PER ALBERO DIN 471	RETAINING RING DIN 472	ANILLO ELASTICO DIN 471	JOINT D'ARRET POUR AXE DIN 471	WELLENBORDRING DIN 471	42
43	30702007	1	PASTIGLIA DI RASAMENTO	TEFLON SHIM	PASTILLA	CALE D'EPAISSEUR	ZWISCHENLEGSCHEIBE	43
44	12010029	1	FLANGIA ANTIROTAZIONE	GEAR FIXING FLANGE	ARANDELA ANTIROTACION	BRIDE ANTIROTATION	VERDREHSICHERUNGSFLANSCH	44
45	60201002	1	CUSCINETTO A SFERE	BALL BEARING	COJINETE A BOLAS	ROULEMENT A BILLES	KUGELLAGER	45
46	60102009	11	VITE T.E. 10.9 UNI 5739	SCREW T.E. 10.9 UNI 5739	TORNILLO UNI 5739	VIS UNI 5739	SCHRAUBE UNI 5739	46
47	60601009	4	SPINA ELASTICA UNI 6873	ELASTIC PIN UNI 6873	VASTAGO ELASTICO UNI 6873	GOUPILLE ELASTIQUE UNI 6873	KERBSTIFT UNI 6873	47
48	60102023	8	VITE T.E. 10.9 UNI 5739	SCREW T.E. 10.9 UNI 5739	TORNILLO UNI 5739	VIS UNI 5739	SCHRAUBE UNI 5739	48
49	60302032	1	GUARNIZIONE O-RING	O-RING	O-RING	O-RING	O-RING	49
50	11010373	1	ANELLO CHIUSURA FRENO	BRAKE CLOSER RING	ANILLO DE CIERRE FRENO	BAGUE DE FERMETURE FREIN	BREMSVERSCHLUSSRING	50
51	60104005	8	VITE TCEI 12.9 UNI 5931	SCREW UNI 5931	TORNILLO UNI 5931	VIS UNI 5931	SCHRAUBE UNI 5931	51
52	60302009	1	GUARNIZIONE O-RING	O-RING	O-RING	O-RING	O-RING	52
53	60801011	7	DISCO	BRAKE PLATE	DISCO	DISQUE DE FREIN	BREMSSCHEIBE	53
54	60801004	8	CONTRODISCO	DIVIDER PLATE	CONTRADISCO	CONTRE-DISQUE	GEGENSCHEIBE	54
55	61001002	1	RONDELLA	WASHER	ARANDELA	RONDELLE	UNTERLEGSCHEIBE	55
56	61801005	1	TAPPO	PLUG	TAPON	BOUCHON	DECKEL	56
57	60302003	1	GUARNIZIONE O-RING	O-RING	O-RING	O-RING	O-RING	57
58	61701001	1	ANELLO ANTIESTRUSIONE	PARBAK RING	ANILLO ANTIEXTRUSION	BAGUE ANTIEXTRUSION	VERSTEIFUNGSRING	58
59	13710107	2	PIATTO DI FISSAGGIO	FIXING PLATE	PLATO DE FIJACION	PLATEAU DE FIXATION	BEFESTIGUNGSPLATTE	59
60	60208005	53	RULLO CILINDRICO TESTA PIANA	ROLLER	RODILLO	ROULEAU CYLINDRIQUE TETE PLATE	ZYLINDERROLLE MIT FLACHKOPF	60
61	30810001	2	SEMIGABBIA IN PLASTICA PER RULLI	ROLLER HOUSING	CAJA DE RODILLOS	CAGE A ROULEAUX EN PLASTIQUE	ROLLENKASTEN AUS KUNSTSTOFF	61
62	60902010	1	ANELLO DI TENUTA	OIL SEAL	EMPAQUETADO	BAGUE D'ETANCHEITE	DICHTRING	62
63	60102001	8	VITE T.E. 10.9 UNI 5739	SCREW T.E. 10.9 UNI 5739	TORNILLO UNI 5739	VIS UNI 5739	SCHRAUBE UNI 5739	63
64	60105005	2	VITE TSPEI 10.9 UNI 5933	SCREW TSPEI 10.9 UNI 5933	TORNILLO UNI 5933	VIS UNI 5933	SCHRAUBE UNI 5933	64
65	60104045	2	VITE TCEI 12.9 UNI 5931	SCREW UNI 5931	TORNILLO UNI 5931	VIS UNI 5931	SCHRAUBE UNI 5931	65
66	62001001	1	RACCORDO CONICO	PIPE FITTING	TUBERIA	RACCORD CONIQUE	KEGELSTUTZEN	66
67	12910043	1	TUBO DI COLLEGAMENTO	BRAKE PIPE	TUBO DE CONEXION	TUYAU DE CONNEXION	ANSCHLUSSROHR	67
68	11010103	1	ANELLO PER FLANGIA ANTIROTAZIONE	GEAR FIXING FLANGE RING	ANILLO ANTIROTACION	BAGUE POUR BRIDE ANTIROTATION	RING F. VERDREHSICHERUNGSFLANSCH	68

ARGANI VERRICELLI

MW 22

SCHEMA IDRAULICO GENERALE
BASIC HYDRAULIC DIAGRAM
ESQUEMA HIDRAULICO
SCHEMA HYDRAULIQUE
HYDRAULIKPLAN

ALLEGATO N.
ATTACHMENT N.
ANEXO N.
ANNEXE N.
ANLAGE N.

3

1 ARGANO
2 MOTORE IDRAULICO
3 VALVOLA DI BILANCIAMENTO
4 DISTRIBUTORE DIREZIONALE A CENTRO APERTO

A - SOLLEVAMENTO
B - DISCESA

1 WINCH
2 HYDRAULIC MOTOR
3 COUNTERBALANCE VALVE
4 DIRECTIONAL MAIN VALVE MOTOR SPOOL

A - LIFTING
B - LOWERING

1 CABRESTANTE
2 MOTOR HIDRAULICO
3 VALVULA DE BLOQUEO
4 VALVULA DISTRIBUIDORA DE CENTRO ABIERTO

A - LEVANTAMIENTO
B - DESCENSA

1 TREUIL
2 MOTEUR HYDRAULIQUE
3 SOUPAPE DE CONTROLE DESCENTE
4 DISTRIBUTEUR DIRECTIONNEL EN CIRCUIT OUVERT

A - LEVAGE
B - DESCENTE

1 WINDE
2 HYDRAULIKMOTOR
3 AUSGLEICHVENTIL
4 WEGEVENTIL MIT OFFENER MITTELSTELLUNG

A - HEBEN
B - SENKEN

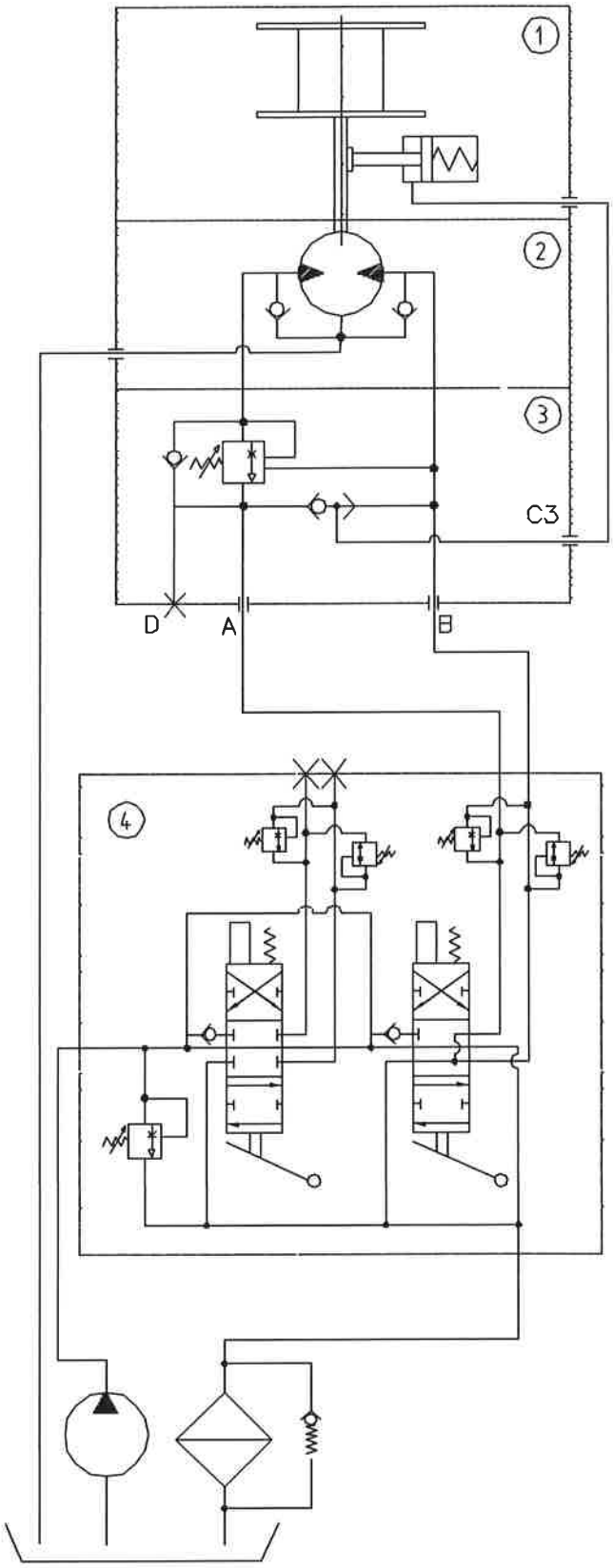

ARGANI VERRICELLI

MW 22

MOVIMENTAZIONE ARGANO
WINCH HANDLING
MOVILIZACION DEL CABRESTANTE
MANUTENTION TREUIL
BETRIEBSBEDINGUNGEN

ALLEGATO N.
ATTACHMENT N.
ANEXO N.
ANNEXE N.
ANLAGE N.

6

MOVIMENTAZIONE SENZA PALLET
HANDLING WITHOUT PALLET
MOVILIZACION SIN PALLET
MANUTENTION SANS PALETTE
BEWEGUNG OHNE PALETTE

PRESA PER SOLLEVAMENTO
HOISTING POINT
AGARRE POR LEVANTAMIENTO
PRISE DE LEVAGE
ABTRIEB ZUM HEBEN

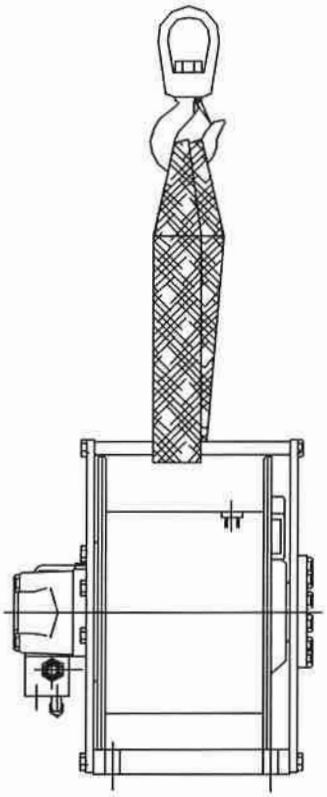

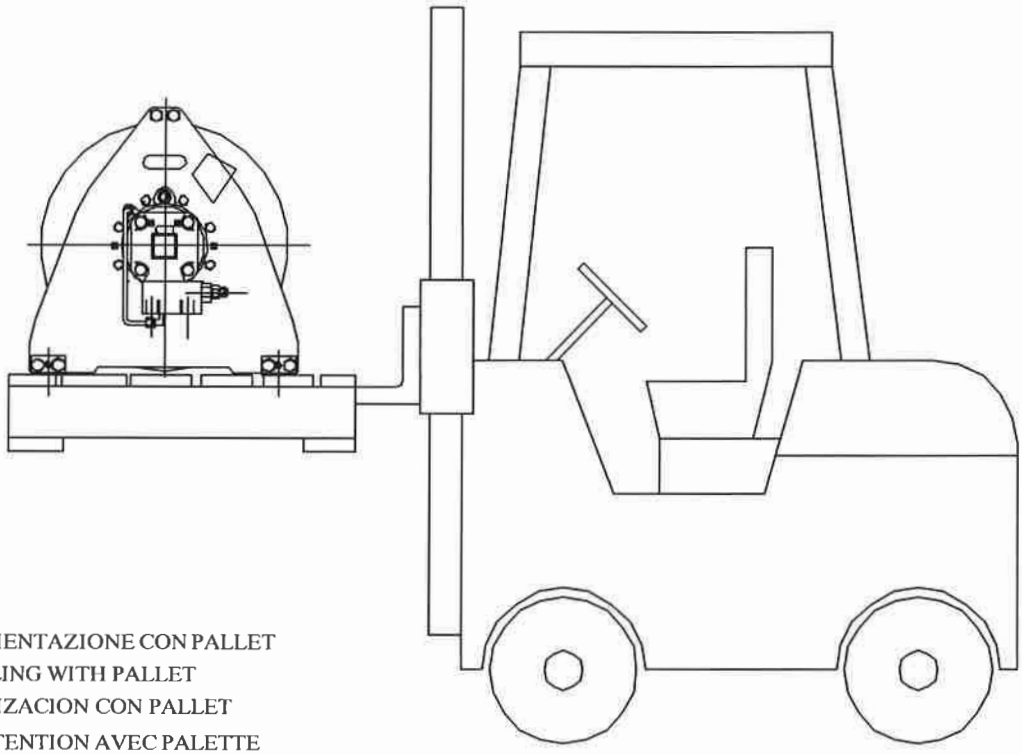

MOVIMENTAZIONE CON PALLET
HANDLING WITH PALLET
MOVILIZACION CON PALLET
MANUTENTION AVEC PALETTE
BEWEGUNG MIT PALETTE

Spare parts catalogue

HMF: 58281

Winch

S25

Spare parts catalogue No.	**L211**
Logbook code	**922500167G**
Edition	**08/01/2014**
Revision	**0**

DINAMIC OIL S.p.A.
Via Togliatti, 15
41030 Bomporto (MO)
tel +39.059.812611
fax +39.059.812603
dinamicoil@dinamicoil.it

Table index	*Winch*	**S25**
	Logbook code	**922500167G**

Page	Table code	Table heading
3	**922500167G-1**	WINCH S25 SX LIS.12 INTERNAL DRAINAGE CABLE PRESS
4	**922500167G-2**	WINCH S25 SX LIS.12 INTERNAL DRAINAGE CABLE PRESS
5	**02981008**	BRAKE GROUP S20-->S45 WITH TRUST BEARING
6	**02981105**	DRAINAGE CONNECTION KIT S20-->S45 SX
7	**905146800-1**	CABLE TENSIONER ELECTRIC END STROKE S20-27 FS
8	**905146800-2**	CABLE TENSIONER ELECTRIC END STROKE S20-27 FS
9	**905000102**	ELECTRICAL END STROKE KIT (PIZZATO)

922500167G-1	*Winch*	**S25**
	Logbook code	**922500167G**

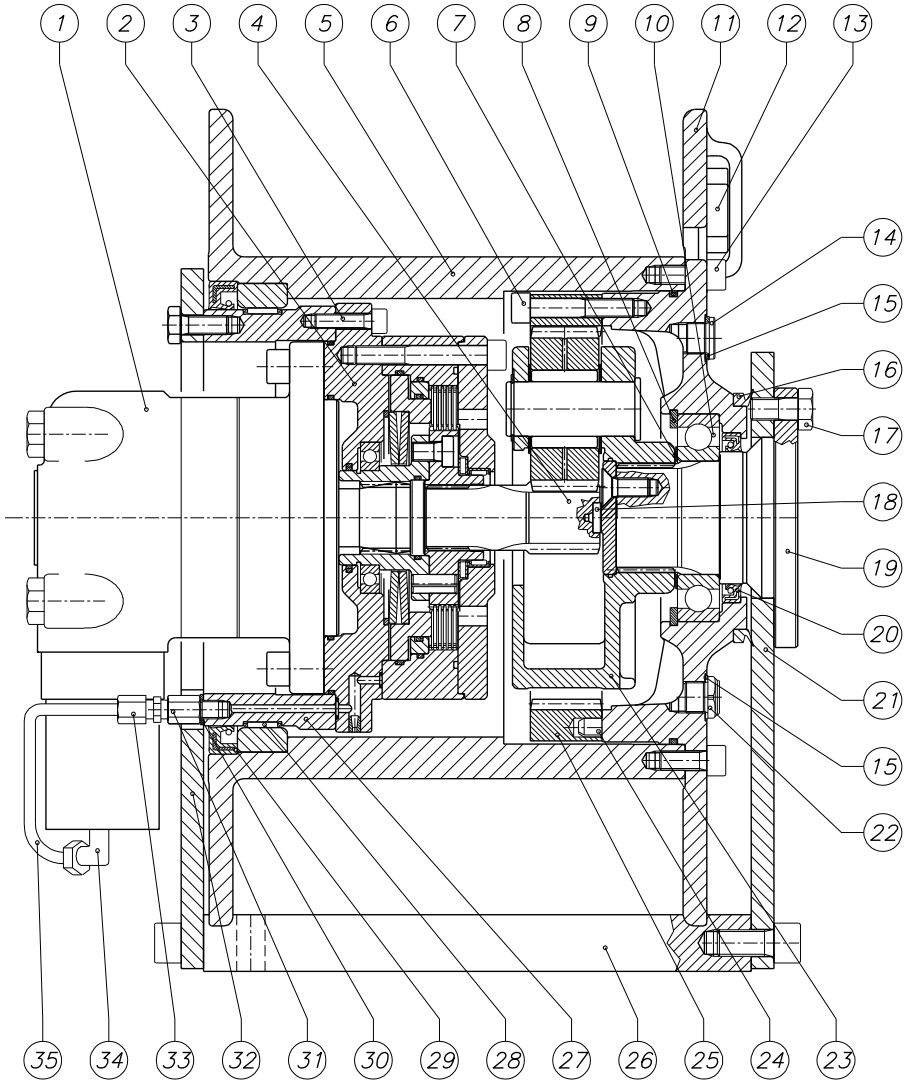

Pos	Code	Qty	Description
1	425020300	1	MOTOR OMTS 250 151B3038
2	02981008	1	BRAKE GROUP S20-->S45 WITH TRUST BEARING
3	410000800	8	HEX SOCKET HEAD CAP SCREW M8X30 8.8 UNI 5931
4	02611004	1	SUN GEAR S20-SW27 RE 500 1:7,5
5	02981204	1	SMOOTH DRUM GROUP S20
6	410410200	12	HEX SOCKET HEAD CAP SCREW M10X55 12.9 UNI 5931
7	427008500	1	THICKNESS SHIM ADJUSTMENT 60X75X1 DIN988
8	421102000	1	HOLE SEEGER Ø110
9	406026900	1	O-RING 2-270 NBR 70SH
10	400001900	1	BALL BEARING 6212
11	02321001	1	GEARBOX SIDE FLANGE S-SE20
12	02410204	1	WEDGE S20-SW27 DIA 12-S45 DIA 18
13	410407000	12	HEX SOCKET HEAD CAP SCREW M10X25 12.9 UNI 5931
14	419000700	1	HEX SOCKET HEAD CAP PLUG DIN 908 R 3/8"GAS
15	423000600	2	SOFT WASHER COPPER 3/8" UNI 6953
16	406060500	1	V-RING NBR VA 120
17	410030500	10	HEX HEAD CAP SCREW M12X25 10.9 UNI 5739
18	1000027200	1	PAD ERTACETAL 16X4,5
19	02371003	1	ANTIROTATION FLANGE S20-SE27
20	415004800	1	SEAL RING 70X90X10 BASL
21	02971646	1	GEARBOX SIDE SUPPORT S20
22	419020600	1	LEVEL OIL PLUG 3/8"(METAL)
23	99124500	1	REDUCTION GROUP RE 510 7,5 '00 X S20
24	434003300	4	ELASTIC PIN SPIROL Ø10X24 UNI6875
25	2030030600	1	RING GEAR RE500
26	02451004	2	FIXING PLATE S20-S27
27	02751001	1	DRUM SUPPORT RING S20-SW27
28	402005900	1	ROLLER CAGE KKRK 200-03 L=682
29	415090100	1	SEAL RING 220X250X15 BASL
30	423203900	1	RUBBER WASHER 1/8"GAS
31	442025600	1	SHORT STUD MF 1/8 L=17
32	02971643	1	MOTOR SIDE SUPPORT S20
33	440001000	1	STRAIGHT CONNECTOR 1/8"G CONICAL Ø6 PIPE
34	440000100	1	CONNECTOR 90° 1/8"G CONICAL Ø6 PIPE
35	02671017	1	BRAKE PIPE S20 S25 DX

922500167G-2	*Winch*	**S25**
	Logbook code	**922500167G**

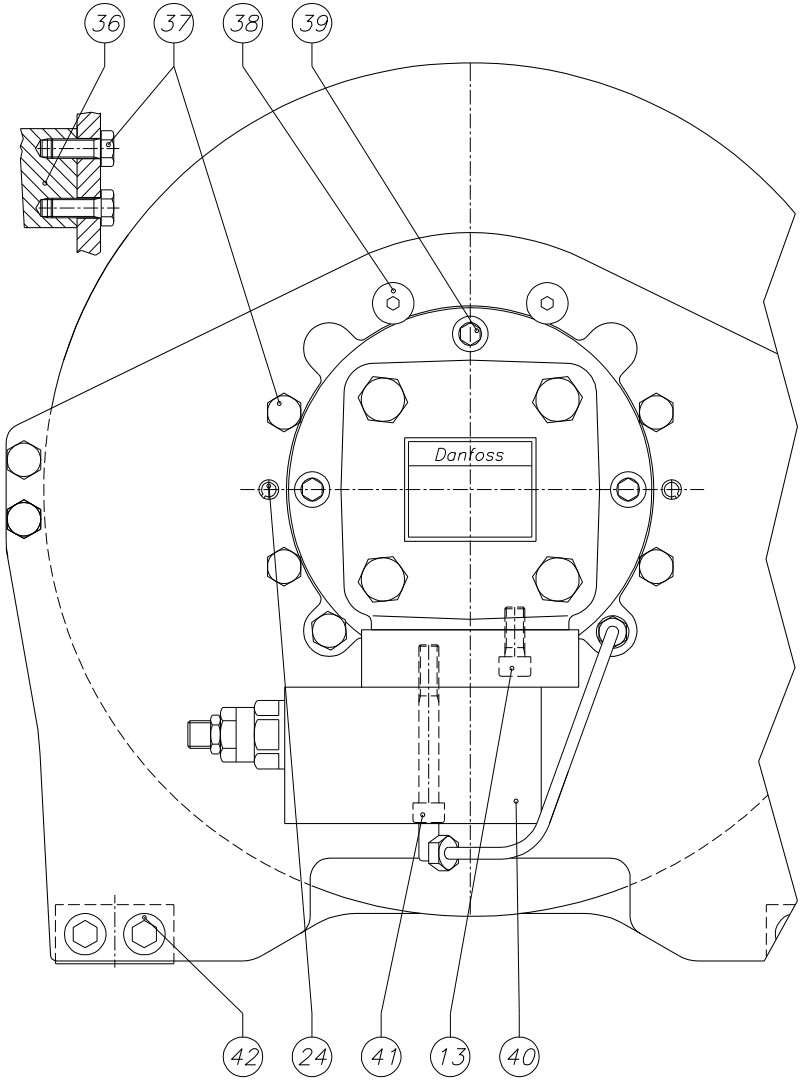

Pos	Code	Qty	Description
13	410407000	12	HEX SOCKET HEAD CAP SCREW M10X25 12.9 UNI 5931
24	434003300	4	ELASTIC PIN SPIROL Ø10X24 UNI6875
36	02451008	2	CROSS MEMBER S-SE20-27 2°SERIES
37	410260100	12	HEX SOCKET HEAD CAP SCREW M10X25 10.9 UNI 5739
38	410101200	2	HEX SOCKET COUNTERSUNK HEAD CAP SCREW M10X25 10.9
39	410003400	4	HEX SOCKET HEAD CAP SCREW M12X30 8.8 UNI 5931
40	438014600	1	VALVE VOC120 F.MD.S.SE.CH/10 OMT
41	410002100	2	HEX SOCKET HEAD CAP SCREW M10X80 8.8
42	410409500	8	HEX SOCKET HEAD CAP SCREW M14X30 12.9 UNI 5931

02981008	*Winch*	**S25**
	Logbook code	**922500167G**

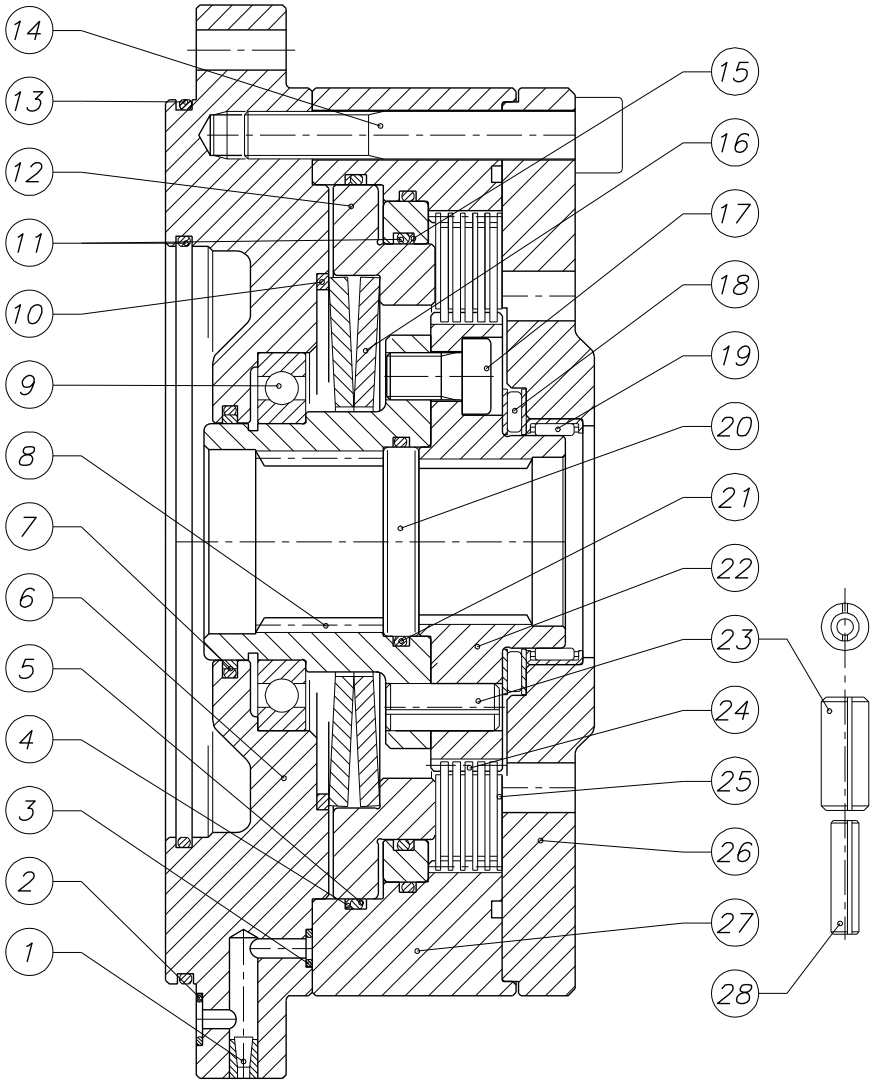

Pos	Code	Qty	Description
1	414001200	2	PLUG SK 550-060
2	406006000	2	O-RING 2-011
3	406001100	1	O-RING 2-008
4	415068700	1	ANTIEXTRUSION FLUORTEN T-2306/A
5	406016800	1	O-RING 2-163 N 674-70 (PARKER)
6	02461045	1	MOTOR FIXING FLANGE OMTS
7	415006300	1	SEAL ROTO-GLYD TF2105-1-0500-600
8	02631002	1	FLANGED COUPLING S20--->S45
9	400004100	1	BALL BEARING 16010 TYPE B
10	415025900	1	SHOULDER RING BR112 FOR HOLE
11	406016700	2	O-RING 2-159 N 674-70 (PARKER)
12	02271002	1	BRAKE PISTON S20--->S100
13	406013100	1	O-RING 2-167
14	410406100	8	HEX SOCKET HEAD CAP SCREW M10X70 12.9
15	415068600	1	ANTIEXTRISION RING FLUORTEN T-2307/A
16	416203700	2	DISC SPRING 112X57X4
17	410419000	3	HEX SOCKET HEAD CAP SCREW M10X16 10.9 DIN7984
18	403002600	1	THRUST BEARING AXK 4565 + 2AS 4565
19	402005500	1	ROLLER BEARING HK 4512
20	02741002	1	BRAKE PAD 'S' WINCHES
21	406014400	1	O-RING 2-129
22	02241003	1	BRAKE DISK GEAR S20--->S100
23	434017100	3	ELASTIC PIN Ø10X24 UNI6873
24	415040400	5	SINTERED DISK MIBA 7351104 C SP.1,6
25	415030800	6	STEEL DISK EST. 5" SHIM 1
26	02461018	1	BRAKE CLOSING FLANGE FOR TRUST BEARING
27	02981003	1	BRAKE BODY GROUP WINCH "S"
28	434017200	3	ELASTIC PIN Ø6X24 UNI6873

02981105	*Winch*	**S25**
	Logbook code	**922500167G**

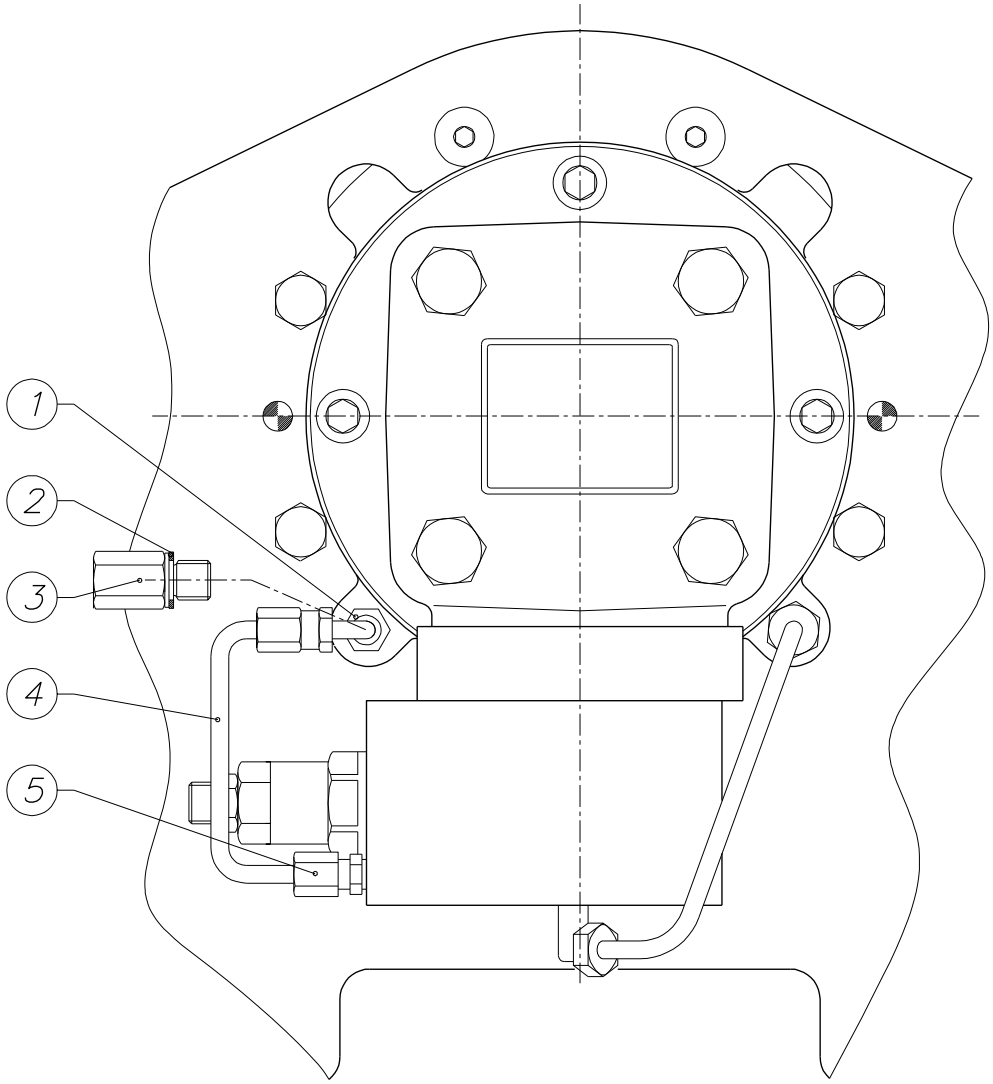

Pos	Code	Qty	Description
1	440000200	1	CONICAL CONNECTOR 90° 1/4"G Ø6 PIPE
2	423204500	1	RUBBER WASHER Ø12
3	438011100	1	UNIDIRECTIONAL VALVE VU-20-X-A
4	02671023	1	DRAINAGE PIPE S20-S25-S27 SX
5	440001000	1	STRAIGHT CONNECTOR 1/8"G CONICAL Ø6 PIPE

905146800-1	*Winch*	**S25**
	Logbook code	**922500167G**

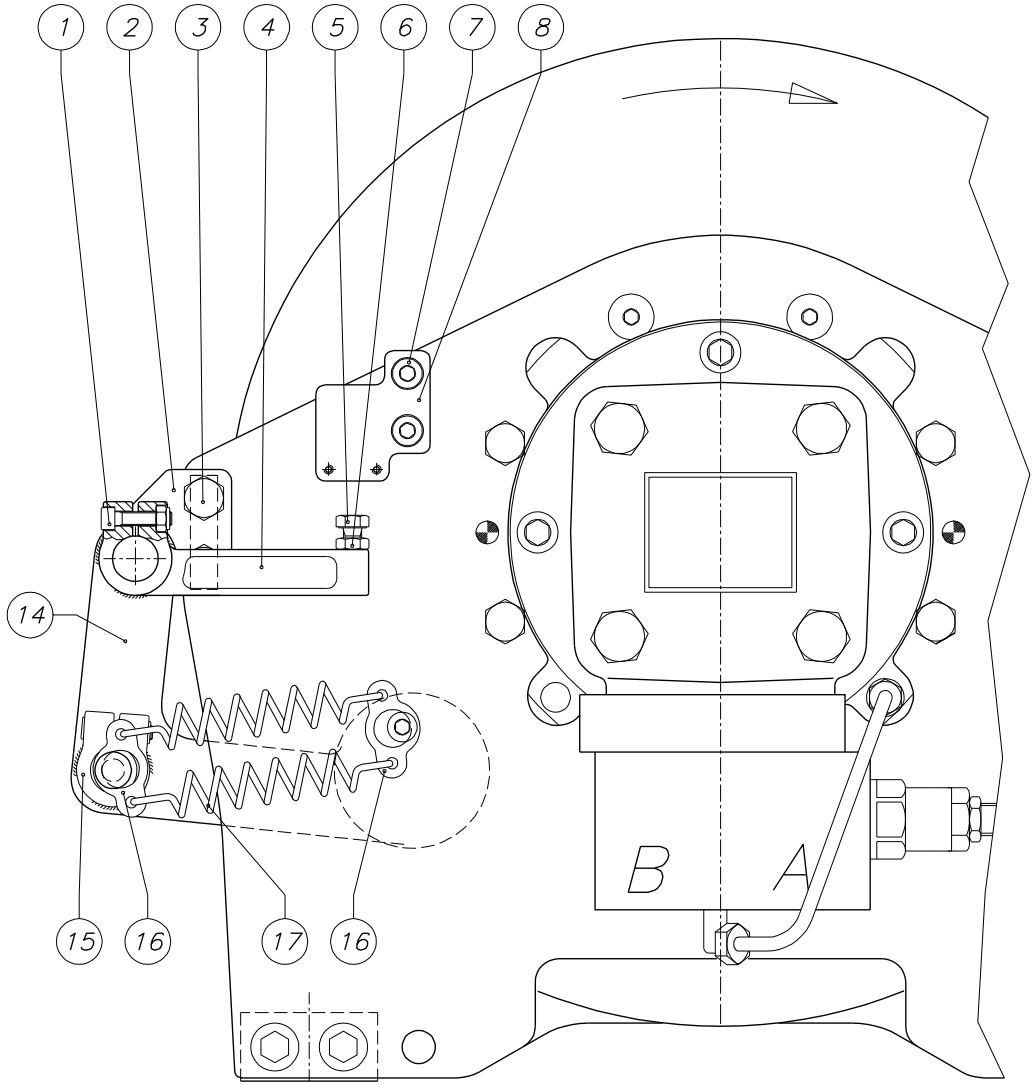

Pos	Code	Qty	Description
1	02981308	1	SCREWS+BOLT KIT M6
2	024902121	2	CABLE PRESS SUPPORT PLATE
3	410025800	4	HEX HEAD CAP SCREW M10X35 10.9 GEOMET 500B
4	01020002	1	END STROKE LEVER (SHORT) NYLON 6
5	410019400	1	HEX HEAD CAP SCREW M8X30 INOX A2-70
6	413002900	3	NUT M8 UNI 5588 INOX A2-70
7	410150600	2	HEX SOCKET HEAD CAP SCREW M8X20 A2-70 (INOX)
8	01020003	1	MICROSWITCH SUPPORT PLATE
14	029917178	1	CABLE PRESS ARM TYPE 09 INOX
15	029813102	2	NYLON CLAMP GROUP Ø20
16	02490285	4	SPRING PLATE I=8
17	418201400	4	TRACTION SPRING DIM T42710 INOX

905146800-2	*Winch*	**S25**
	Logbook code	**922500167G**

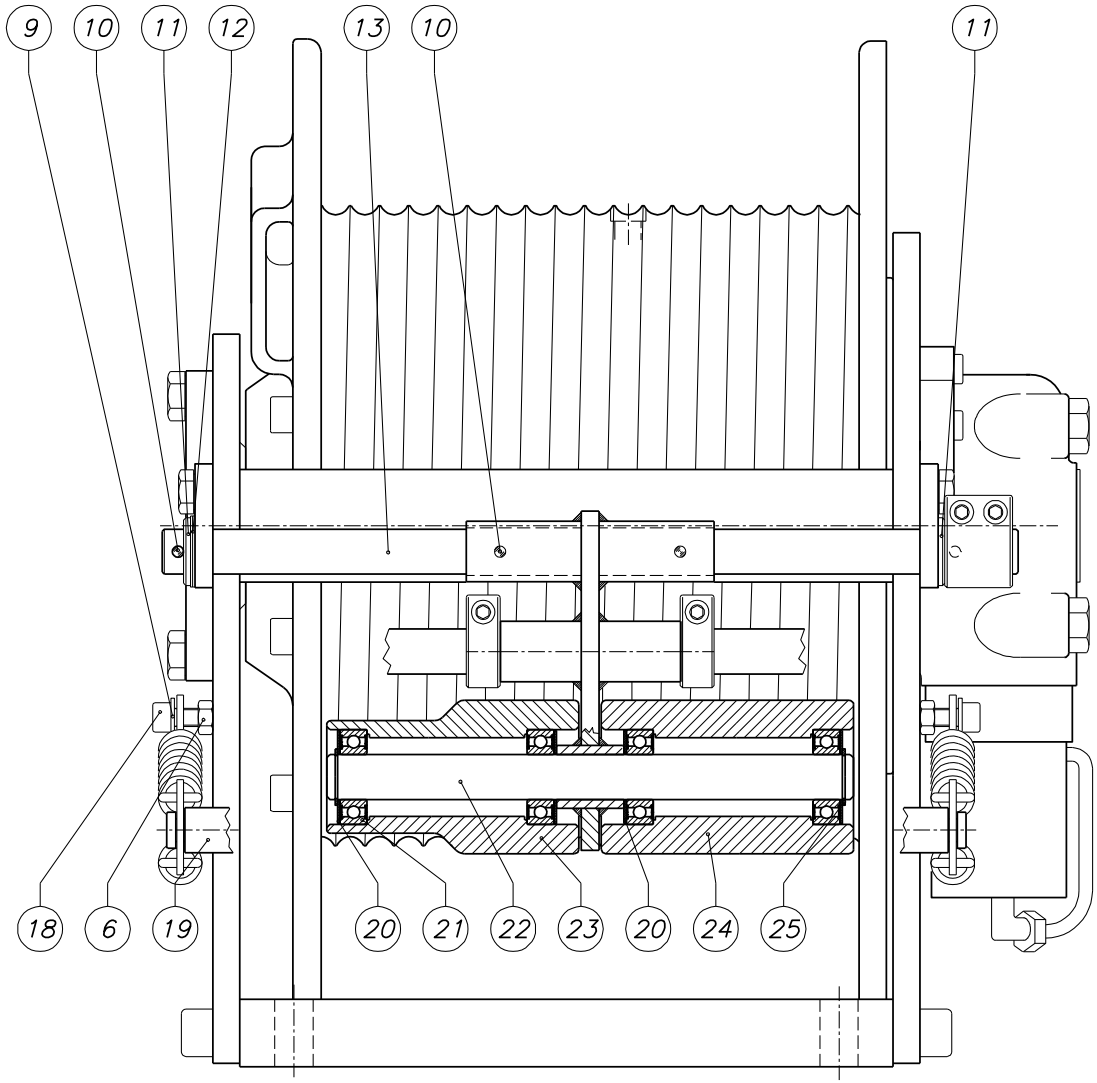

Pos	Code	Qty	Description
6	413002900	3	NUT M8 UNI 5588 INOX A2-70
9	423109700	2	FLAT WASHER Ø8.4X17X1.6 INOX
10	434010900	3	ELASTIC PIN Ø 5X30 UNI6873 INOX
11	423203800	2	WASHER Ø21 UNI6592 INOX SHIM 3
12	423010500	4	NYLON WASHER Ø20.2X31.5X1
13	02601602	1	LIMIT SWITCH CABLE PRESS PIN INOX SE20
18	410083800	2	HEX SOCKET HEAD CAP SCREW M8X30 INOX UNI 5931
19	02601600	1	SPRING PIN Ø20X355
20	423010600	4	NYLON WASHER Ø21X41.5X1
21	400011600	4	BALL BEARING 6004 2RS
22	02601601	1	CABLE PRESS Ø20X224 ROLL PIN STANDARD
23	01010534	1	DISCHARGED ROLLER L50 Ø68X112 PLA6
24	01010533	1	CABLE PRESS ROLLER Ø68X112 ERTALON 6 PLA
25	421005700	2	SHAFT SEEGER Ø20 INOX

905000102	*Winch*	**S25**
	Logbook code	**922500167G**

Pos	Code	Qty	Description
1	409801	1	MICROSWITCH PIZZATO FR501-V9
2	460100900	1	REDUCTION MF PG13,5-PG7 RTG 86782
3	460100400	1	FIXED MALE CONNECTOR PG7 RTG84310
4	410085000	2	HEX SOCKET HEAD CAP SCREW M4X40 INOX A2-70
5	423106700	2	CHAMFERED WASHER Ø4 UNI 1750 INOX

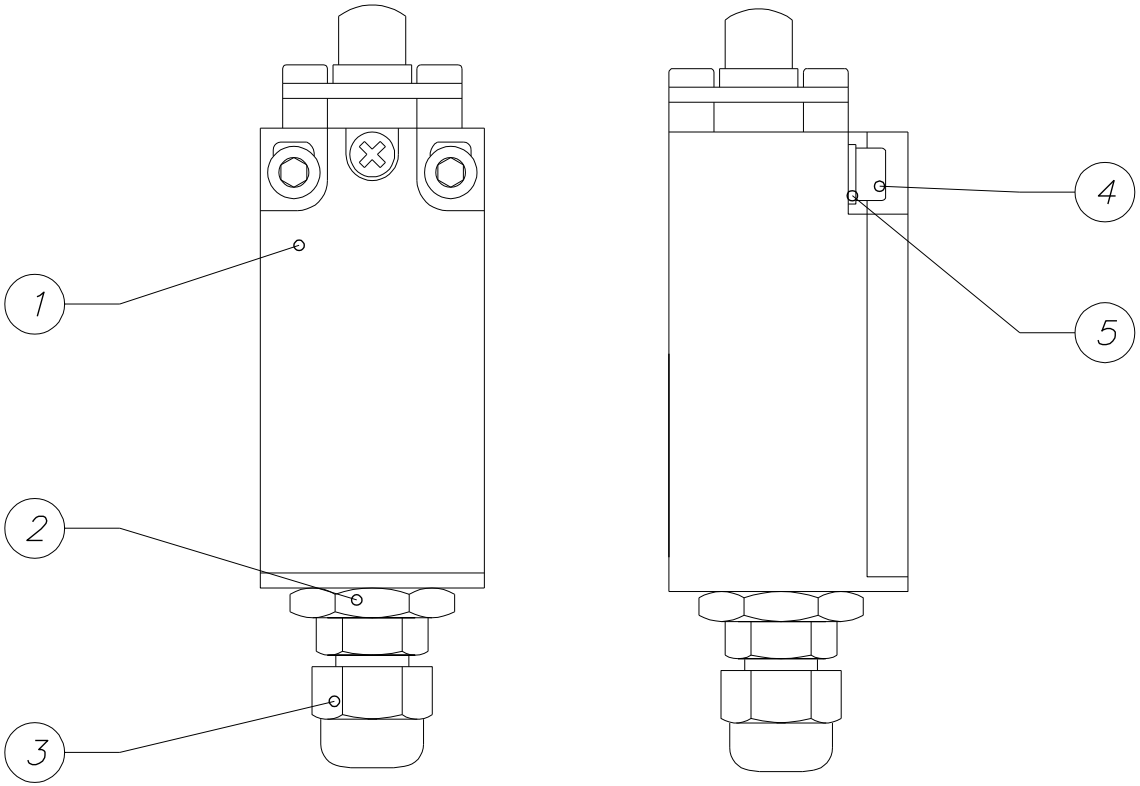

STV15

dinamic oil	ARGANO OLEODINAMICO HYDRAULIC WINCH	Cod.92 25 00 16 7G 28/05/2013 S25

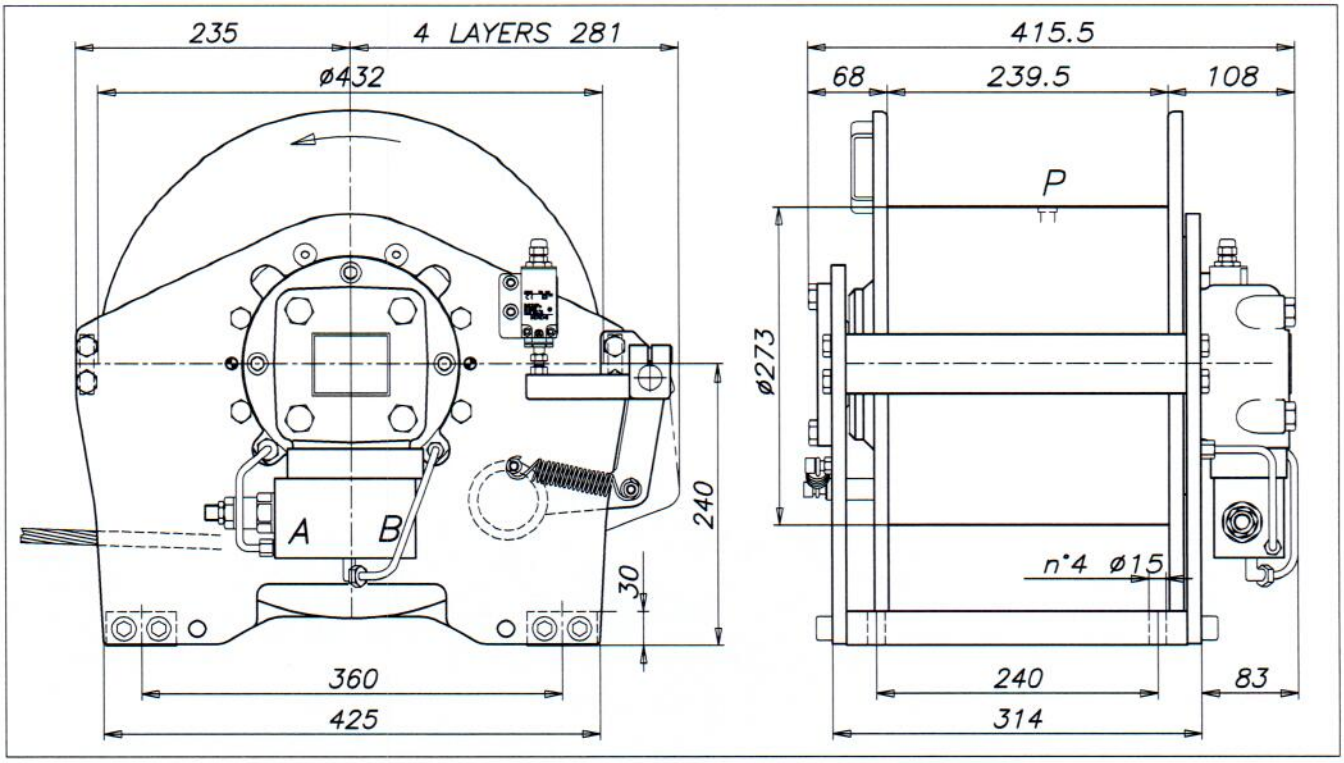

Strato di fune – Rope layer	n°	1	2	3	4
Tiro diretto Line pull	daN	3130	2890	2680	2500
Velocita' fune con Rope speed with 60 l/1'	m/1'	31	34	36.5	39
Q.ta' fune tamburo liscio Rope capacity smooth drum	m	17	35	55	76
Q.ta' fune tamburo filettato Rope capacity grooved drum	m				

Pressione di sollev. Hoisting pressure	220 bar
Max–min portata alim. Max–min pump delivery	100/15 l/1'
Cilindrata motore Motor displacement	250 cm^3
Rapporto di riduz. Gear ratio	1:6.5

A = Ramo di sollevamento Hoisting port	3/4"	D= Ramo di drenaggio Drain port	--	Diametro fune consig. Adviced rope size	12 mm
B = Ramo di discesa Lowering port		P= Tappo olio lubrificazione Lubrication oil plug	3/8"	Massa Weight	154 Kg

IL PRESENTE ARGANO NON PUO' ESSERE UTILIZZATO PER IL SOLLEVAMENTO DI PERSONE.

- Sollevamento con rotazione antioraria del tamburo.(Contraria a richiesta).
- Freno negativo multidisco con coppia statica di 120 daN.m.
- Lubrificazione ingranaggi in bagno d'olio
- Contropressione massima sulla linea di ritorno 5 bar.
- Per sicurezza lasciare sul tamburo 4 spire di fune sempre avvolte.
- L'apparecchio e' classificato secondo la **UNI ISO 4301/1.**
- Per fissare l'argano utilizzare viti **M14 classe 10.9.**
- Le caratteristiche tecniche possono variare senza preavviso.

THE PRESENT EQUIPMENT CAN'T BE USED TO LIFT PEOPLE.

- Hoisting with counter clockwise rotation of the drum (or clockwise if required)
- Negative multi–disc brake,with 120 daN.m of static torque.
- Gear lubrication oil bath.
- Maximum back pressure on return line : 5 bar.
- Always keep at least 4 twists of rope on the drum,for safety reasons.
- The equipment is classified under **UNI ISO 4301/1.**
- To fix the winch use screws **M14 10.9 class.**
- Technical features may change with no previous notice from manufacturer.

DINAMIC OIL S.p.A–Via Togliatti, 15 – 41030 Bomporto (MO)–Italy Tel. 059 812611– Fax 059 812606

ROLLIX®

INSTALLATION OG VEDLIGEHOLDELSE AF DREJEKRANSE OG SPECIALLEJER

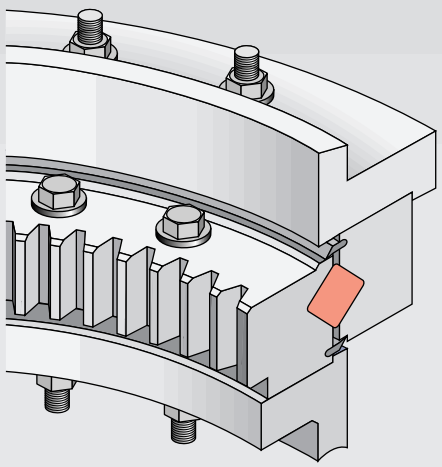

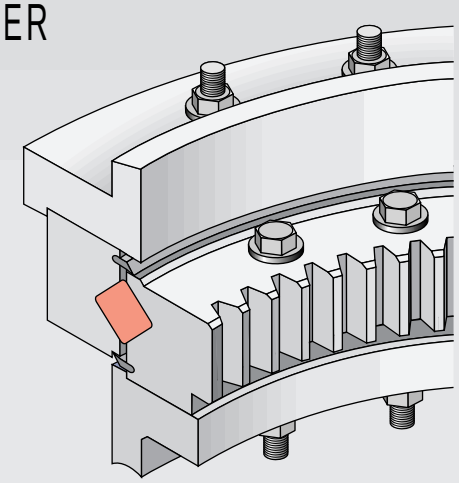

IT ETR 946 - INDICE 2 - JANVIER 1997

o u t r e m e r : 0 2 40 01 97 00 - Photos : Pascal Beltrami

ROLLIX®

DEFONTAINE S.A.
3, Rue Louis Renault B.P. 329
F - 44803 SAINT-HERBLAIN Cedex
Tél. (33) 2 40 67 89 89
Fax (33) 2 40 67 89 03

DEFONTAINE GROUP

DK

Vi gratulerer Dem hermed med Deres valg af en ROLLIX-drekekrans. Vi er overbevist om, at de vil blive yderst tilfreds med dette produkt, såfremt De anvender nedenstående anvisning, anbefalet af ROLLIX DEFONTAINE.

ADVARSEL

Garantien, som ROLLIX yder, er kun gældende så længe instruktionen overholdes, hvad angår samling, anvendelse og vedligeholdelse af drejekranse, som beskrevet i ROLLIX's tekniske litteratur og katalog.
Specielt nominelle eller exceptionelle belastninger bør ikke overskride kapaciteten for leje, tænder og befæstelsesdele. Kun bolte anbefalet af ROLLIX må anvendes i fastgøringshullerne.

MONTAGE

Foruden at sikre at drejekransen opererer under de bedste forhold og holder den forventede levetid, kræver anvendelsen af en drejekrans i enhver sammenhæng, at der tsærlige forholdsregler eller anvendes særlige fremgangsmåder.
For korrekt udførelse af monteringen vil det følgende være til hjælp for operatøren.

INFORMATION

Denne manual og instruktionsbog kan fås i flere fremmedsprog, og De vil kunne rekvirere disse hos os ved normal henvendelse. Vi gør Dem opmærksom på, at De bør overholde vore forslag til vedligeholdelse af kransen i Deres maskine - eller i givet fald videregive informationerne til operatøren.

TILSLUTNINGSKONSTRUKTION

MONTAGEFLANGE

Drejekransen har en moderat aksial bøjningstivhed, idet dens diameter er stor i forhold til tværsnittet. Drejekransen skal installeres på bearbejdede tilslutningsflanger, der sikrer en tilstrækkelig stivhed i forhold til de belastninger, der skal overføres. På denne måde kan man sikre en jævn fordeling af belastningerne og undgå deformation under drift, hvilket ville skade drejekransens driftssikkerhed.Det er således nødvendigt at bruge montageflanger, hvis minimale tykkelse ikke må ligge under de værdier, som er angivet i ovenstående skema.

Bærefladens bredde skal mindst være lig med drejekransens.
Vi anbefaler ringformede forstærkninger af konstruktionenplaceret lige over løbebanen. For at opnå en bedre fordeling af belastningen, foretrækkes kraftig forstærkninger frem for tynde forstærkninger med ribber.

Drejekran.gennem-snitlige diam.(mm)	500	750	1000	1250	1500	2000	2500	3000
Minimal tykkelse (mm)	25	30	35	40	50	60	70	80

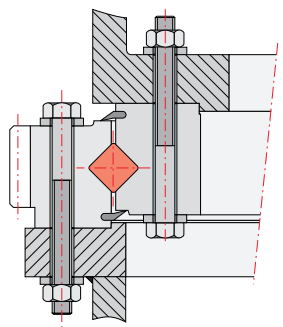

TILSLUTNINGSKONSTRUKTION

MONTAGEFLANGERNES PLANHED

Skævheder i flangen medfører deformationer på løbebanen, forårsager indre modstand eller eventuelle blokeringer, som kan ændre lejets levetid.

De maksimale ujævnheder må ikke overstige værdierne i modstående skema.

Drejekran.gennem-snitlige diam.(mm)	500	750	1000	1250	1500	2000	2500	3000
Maksimal tolerance med rulleleje (mm)	0,10	0,12	0,15	0,18	0,20	0,25	0,29	0,32
Maksimal tolerance med kugleleje (mm)	0,12	0,18	0,21	0,25	0,28	0,33	0,38	0,42

MONTAGEFLANGE

Disse maksimale værdier er tilladelige for "lange fejl" i omkredsens retning.
De "korte fejl" f.eks. mellem to fastspændingshuller, må ikke overstige 1/4 af modstående værdier. De fejl, som forekommer i den radiale retning (konicitet) skal forblive under 0,05 mm / m af den gennemsnitlige Ø.

LANGE FEJL

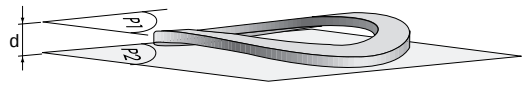

KORTE FEJL

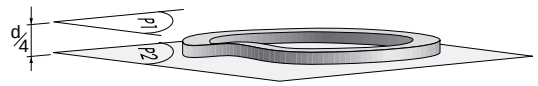

TOLERANCER FOR PLANHED

Planheden på hele drejekransens montageflanger skal være således, at afvigelsen af planheden under maksimal belastning ikke overstiger de i skemaet angivne værdier.

Drejekran.gennem-snitlige diam.(mm)	500	750	1000	1250	1500	2000	2500	3000
Maksimal afvigelse (mm)	0,25	0,30	0,35	0,45	0,55	0,65	0,80	1,00

PLASTIK-CEMENT

I de tilfælde hvor ovenstående tolerancer ikke kan overholdes, kan man bruge Epoxy-harpiks til udglatning af anlægsfladerne.Flere produkter kan benyttes afhængigt af hvilken type fejl, der skal kompenseres for. En detaljeret vejledning kan fås ved henvendelse tilvor salgsafdeling.

INSTALLATION

TRANSPORT-GODSHÅNDTERING

Vore drejekranse bliver omhyggeligt indpakket for at undgå skader under transport.
Transport og opbevaring skal foregå udelukkende i vandret stilling. Hvis drejekransen skal transporteres i andre stillinger, kræves der specielt tilpassede transportkasser.
Som alle maskindele skal drejekransene håndteres forsigtigt idet der skal undgås stød, specielt i radial retning. Intern transport skal foregå ved hjælp af passende grej, som svarer til delens vægt, der er angivet på typeskiltet.

LEVERING - OPBEVARING

De emballerede drejekranse er blevet overfladebeskyttet mod korrosion, som gør det muligt at opbevare dem i 6 måneder i en tempereret lagerhal.
Hvis opbevaringen overstiger 6 måneder, skal der påføres ny beskyttelse. Efter et tidsrum på 18 måneder, vil det være nødvendigt at foretage en ny smøring *(se afsnittet VEDLIGEHOLDELSE - SMØRING).*

FØR IBRUGTAGNING-KLARGØRING

NÅR DREJEKRANSEN PAKKES UD :

- Vær opmærksom på ikke at skære i drejekransens tætninger, når emballagen fjernes.
- Skær i papiret, helst på den udvendige diameter, og ikke på fladerne.

Ved affedtning af drejekransen :

- Benyt en standard fortyndervæske, brug aldrig fortyndervæsker, som indeholder klorholdige opløsningsmidler;
- Pas på ikke at påføre fortyndervæske på tætninger.
- Før montering af smøreanordninger eller tilslutning af rørledninger, skal plastikpropperne eller unbracoskruerne fjernes fra smørehullerne.

VED INSTALLATION AF DREJEKRANSEN

TILSLUTNINGSKONSTRUKTION

- Sørg for, at montageflanger er i overensstemmelse med forskrifterne
(se kapitlet TILSLUTNINGSKONSTRUKTION).
- Kontroller, at der ikke er nogen spåner, svejsekorn, mærker af korrosion, el. lign.
- Undersøg, at drejekransen hviler rigtigt på flangerne.

CENTRERING

I de tilfælde hvor påvirkningerne i radial retning er store, specielt hvis drejekransen er placeret lodret, er det nødvendigt at bruge centreringer, som er beregnet hertil.
Vi anbefaler at påføre et klæbemiddel af typen LOCTITE 586 for at begrænse den relative forskydning mellem drejekransen og understøtningerne.

POSITIONERING

Hærdningsovergangen, som er markeret med en rød streg på tandhjulet, eller på påfyldningsproppen, er synlig på den anden ring, skal placeres i 90° fra belastningernes hovedakse eller fra den arm, som bærer belastningen *(se kapitlet IDENTIFIKATION).*

INSTALLATION

MONTAGE

- Kontroller, at fastspændingsbolte og møtrikker er af den korrekte kvalitet : mærkning 10,9 på hovedet. Gevindene skal være korrekt smurte.
- Til drejekranse i standardiseret stål Z eller N, er det nødvendigt at bruge flade underlagsskiver. Disse skal have :
- en elasticitetsgrænse der er højere end eller lig med 600 Mpa,
- en diameter $D_R = 2$ d,
- en tykkelse h > 0,3 d.

Brug a fjederskiver, lige meget hvilken type eller udførelse, er ikke tilladt og vil medføre bortfald af garanti.

- Foretag fastspændingen med let tilspænding.
- Foretag derefter den endelige tilspænding ved hjælp af momentnøgle, her anbefales hydraulisk værktøj.
- Tilspænd i den rækkefølge som vist i skemaet.

Tilspændingsmomentet er angivet i nedenstående skema for skrueklassen 10,9 og en friktionskoefficient for skrue/møtrik på 0,12 i henhold til VDI 2230.

TILSPÆNDINGSRÆKKEFØLGE

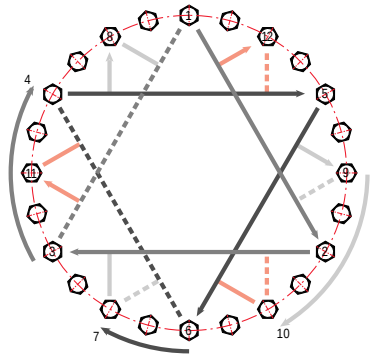

TILSPÆNDINGSMOMENT

Diameter (mm)	10	12	14	16	18	20	22	24	27	30	33
Moment (N.m)	69	117	185	280	390	560	750	960	1400	1900	2600

VED INSTALLATION AF TANDHJULET

FORTANDING

- Indstil tandhjulsdrevet til det maksimale "udsvingspunkt" for fortandingen, som er mærket med en blå streg.
- Ved dette punkt skal spillerummet ligge inden for grænseværdierne, der er beregnet eller mindst 0,05 x modulet.
- Når der bruges flere drev, skal alle indstilles på samme betingelser.
- Ved prøvning skal man sørge for, at en justering af drev og drejekransen giver mulighed for en indstilling over hele fortandingens bredde.

Kontrol af fortandingens spillerum

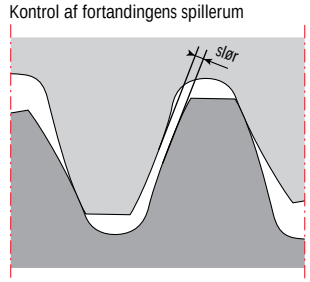

- Smør fortandingen på drejekransen og drevet før i drifttagning *(se kapitlet VEDLIGEHOLDELSE).*

INSTALLATION

INSTALLATION

AFPRØVNINGER - KONTROL
Når hele fastspændingsenheden er korrekt tilspændt :
- Lad tandhjulet dreje mindst tre omgange.
- Check på ny fortandingens spillerum over en hel omgang.
- Mål det totale slør under en kendt belastning, og afmærk målepunkterne.

Disse værdier registreres i en kontrolbog til senere brug.

Metode :
- Anbring et mikrometerur mellem de to ringe nærmest løbebanen i belastningernes hovedakse. Præcisionsklasse : minimum 0,1 mm.
- Udfør en kalibrering til nul med en reference-belastning.
- Påfør måle-belastningen.
- Aflæs værdien på det målte punkt.
- Udfør flere aflæsninger på forskellige punkter, som på forhånd er udvalgt og mærket (også til senere brug).
- Tag højde for tilslutningsflangernes afbøjning samt boltenes strækforlæn-gelse ved placering af mikrometeruret.

KONTROL AF SLØR
UNDER BELASTNING

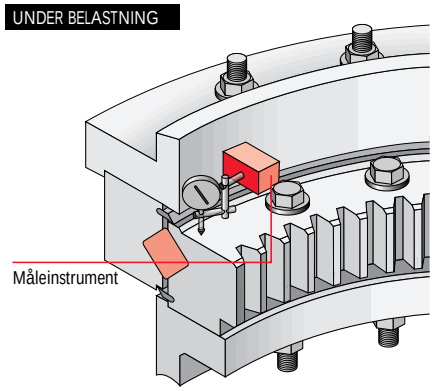

IDENTIFIKATION

TYPESKILT

Hvert enkelt drejekrans kan identificeres individuelt ved hjælp af et metalskilt, som er nittet fast ved siden af påfyld-ningsproppen på den ring, som ikke er fortandet.
Skiltet giver oplysninger om :
- Fabrikationsdato,
- Referencenr,
- Serienummer,
- Vægt i kg.

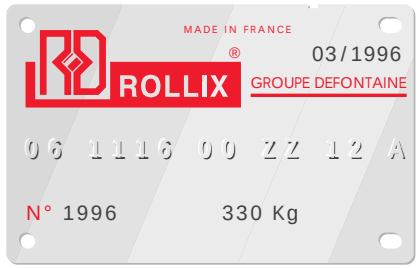

PRODUKTKODER

ROLLIX' drejekranse benævnes med en produkt-reference, der både indeholder tal og bogstaver, i henhold til nedenstående koder :

	GEOMETRI	MATERIALE		
	06 1116 00	Z Z 1 2	A	
06	1116 00	Z Z 1 2	A	Hovedgruppe
06	1116 00	Z Z 1 2	A	Lejets gennemsnitlige diameter
06 1116	00	Z Z 1 2	A	Undergruppe
06 1116 00	Z	Z 1 2	A	Materialekode for ring uden fortanding
06 1116 00	Z Z	1 2	A	Materialekode for ring med fortanding
06 1116 00	Z Z 1	2	A	Behandling af fortanding
06 1116 00	Z Z 1 2		A	Overfladebehandling

IDENTIFIKATION

MÆRKER TIL BRUG VED INSTALLATIONEN

For at kunne udføre en korrekt installation af drejekransen er følgende mærkeringer påført :

Hærdningsovergang :
- På den ikke fortandede ring sidder denne overgang ved påfyldnings-proppen.
- På den fortandede ring er over-gangen mærket med en rød streg på fladen. Disse områder skal om muligt anbringes i belastningens neutrale akse, dvs. nul-moments aksen.

Centreringsmærke :
Det maksimale udsvingspunkt for den "ikke-runde" fortanding er afmærket med :
- to blå streger på toppen af de pågældende tænder,
- et 0, der er præget i fladen modsat anlægsfladen.

Drevet spil skal indstilles på dette punkt.

SERVICE

VEDLIGEHOLDELSE - SMØRING

Det er yderst vigtigt for løbebanernes og tændernes levetid, at de bliver smurt regelmæssigt. Driftspåvirkninger såsom belastning, temperatur, hastighed, vibrationer, mv. er bestemmende for valget af smøremiddel.

LØBEBANE
Med mindre andet er angivet, er tandhjulene smurt fra fabrikken.
Standardfedt : ESSO BEACON EP2 eller lignende.

Krav til lejefedt :
- Litiumsæbe-fedt.
- Basisoljens minimums viskositet : 150 mm^2/sek.
- Grad : NLGI 2.
- Tilsætningsmidler mod slid og ekstreme tryk.
- Anvendelsestemperatur : - 30 ° C til + 120 ° C
- 4 kugletests (bæreevne) : ASTM D 2596 (NT24) > 300
- ND_M maksimum :

for kuglelejer ≃ 60 000
for rullelejer ≃ 30 000

FORTANDING
Der er anvendt beskyttelse mod oxidering.

SERVICE

VEDLIGEHOLDELSE - SMØRING

SMØREHULLER
Er som regel gevindskåret M10 x 1 og lukket med unbracoskruer. Disse skruer skal fjernes og erstattes enten af smørenipler eller tilslutninger til et centralsmøresystem.
BEMÆRK : Drejekransens påfyldings-prop har et gevindhul. Dette er ikke et smørehul.

SMØREMETODE
Smøringen bør foretages ved langsom drejning, over mindst to omgange, og der skal smøres i alle smøresteder.

INTERVALLER FOR SMØRING
Løbebane og fortanding
Smøreintervaller afhænger af brugen og omgivelserne. Det anbefales, at der smøres efter hver 150 timer drift, når der ikke forekommer særlige belastninger. Dette interval skal nedsættes til 50 timer, hvis anven-delsesforholdene er specielt vanskelige, eller hvis der arbejdes i meget støvfyldte eller fugtige omgivelser.
Før og efter en lang periode, hvor materiellet ikke har været i brug, er det nødvendigt at foretage en ny smøring. Hvis materiellet er henstillet i længere tid, skal der foretages smøring under omdrejning hver 6. måned.

MÆNGDEN AF FEDT
Løbebaner :
Mængden af fedt i en drejekrans kan tilnærmelsesvis findes i en formel
"Q", som kræves pr. cm^3 :
Q = 0,005/3 x D x H, hvor:
D = Drejekransens gennemsnitlige Ø i mm.
H = Drejekransens højde i mm.

I alle tilfælde bør der forekomme en lille udtrængning af nyt fedt i kanten af pakningerne.

Fortanding :
Fedtet skal enten sprøjtes på eller lægges på med pensel, og det skal dække tandhjulets flanker og ringen fuldstændig.

SÆRLIGE ANVENDELSER
ROLLIX' udviklingsafdeling hjælper gerne med at finde løsninger til brug under ekstreme forhold, hvad enten det angår temperatur-forhold eller hastighed. De kan få vor tekniske brochure IT ETR 551 på forespørgsel.

SKEMA OVER SMØREMIDLER
Efter vor erfaring er de smøremidler, som er angivet i nedenstående skema, indbyrdes kompatible og ligeledes kompatible med drejekransens komponenter.
Man kan bruge andre smøremidler på betingelse af, at man på forhånd sikrer sig, at de kan blandes med ROLLIX' standard smøremiddel.De smøremidler, som indeholder molybdændisulfid MoS2 frarådes udtrykkeligt.

LEJE	MÆRKE	FORTANDING
Aralub HLP2	ARAL	Aralub LFZ1
Rhus L 474/2	MOTUL/BECHEM	Berulit GA 400
Energrease LS - EP2	BP	Energol WRL/GR 154 GS
Grease LMX	CASTROL	
Epexa 2 / Epexelf 2	ELF	Cardrexa DC1
Mobilux EP2	ESSO	Surret Fluid NX
Mobilux EP2	MOBIL	Mobilgear OGL 007
Retina EP2-Alvania EPLF2	SHELL	Malléus GL205
Multis EP2-Lical EP2	TOTAL	Ceran AD+

Der tages forbehold for aendrede betegnelser fra fabrikantens side.

SERVICE

FOREBYGGENDE VEDLIGEHOLDELSE

KONTROL AF TÆTNINGER
Ved hjælp af en visuel undersøgelse kan man sikre sig, at tætningerne er i driftssikker stand :
- der må ikke forekomme større spændinger eller revner,
- tætningerne skal sidde korrekt,
- undersøg sliddet på læben, der skraber imod.

Om nødvendigt, skal tætninger udskiftes. Efter smøring skal resterne af det gamle fedt fjernes, og det skal kontrolleres, at det ikke indeholder urenheder såsom sand, korn, metalpartikler el. lign.

KONTROL AF FASTSPÆNDINGEN
Fastspændingsbolte og møtrikker kan blive trætte og det er derfor yderst nødvendigt, at undersøge at niveauet af den krævede forspænding i boltene stadig er korrekt.
ROLLIX anbefaler at foretage en efterspænding af boltene efter de første 2 - 4 måneders brug, og siden ved hvert systematiske, årlige eftersyn. Hvis nogle af boltene har løsnet sig, vil det være nødvendigt med en sagkyndig undersøgelse.Visse bestemmelser pålægger en udskiftning af bolte hvert 7. år eller efter hver 14 000 driftstimer. Under alle omstændigheder skal man rette sig efter normer og bestemmelser, der er gældende for anvendelsen.

KONTROL AF INDSTILLINGEN
Under rengøringen, der går forud for smøring af fortandingen skal man :
- Være opmærksom på, at der ikke forekommer fremmedlegemer i bunden af tænderne, på drejekransen eller drevet.
- Undersøge om tandhjulets læng-deakse er jævn over hele fortandingens længde. Ret om nødvendigt justeringen af akserne.
- Kontroller værdien af udsvinget.

DREJEKRANSENS MAX. SLØR

KONTROL AF SLØR UNDER BELASTNING
ROLLIX leverer sine drejekranse med en intern forspænding, der gør enheden driftssikker og optimerer produktets sikkerhed. Denne spænding mindskes, jo ældre produktet bliver, og medfører en langsom forøgelse af slør under belastning.
Drejekransen skal udskiftes, når dennes slør ikke længere kan sikre korrekt og sikkert drift.

For at kunne bestemme sliddet, er det nødvendigt at kende sløret under belastning
- når materiellet er nyt : J_0,
- på kontroltidspunktet : J_1.

Disse målinger skal udføres under samme forhold, efter at man først har undersøgt fastspændingsboltene
(se kapitlet INSTALLATION)

De målte værdier registreres i en kontrolbog til senere brug.
Sliddet udgør forskellen : $u = J_1 - J_0$.
- Drejekransen skal overvåges, når : $u \geq J_0$.
- Man bør tænke på at udskifte den, når : $u \geq 1{,}5\ J_0$.

og den skal udskiftes, når : $u > 2\ J_0$.

Under alle omstændigheder skal man henholde sig til gældende bestemmelser for den pågældende anvendelse og det pågældende brugsland.

Produktet er således konstrueret og fremstillet i henhold til normen ISO 9000 og ofte på basis af Deres svar i spørgeskemaet IT ETR 916. Produktet vil leve op til Deres forventninger, hvis driftsbetingelserne for produktet er de samme som dem, ROLLIX har regnet med.

Hvad enten De er konstruktør, montør eller sælger påhviler det Dem at kontrollere endnu en gang, at Deres eller Deres kundes behov er blevet korrekt defineret i vort spørgeskema IT ETR 916 og at installations-, service-og vedligeholdelsesbetingelserne for vort produkt bliver overholdt på alle punkter.

For at lette brugen af disse dokumenter har vi vedlagt endnu et spørgeskema, som ikke er udtømmende, men som indeholder de vigtigste og kontrol-punkter, som under alle omstændigheder skal udføres.

Desuden vil det være en god idé at læse vore garantibestemmelser samt garantiens begrænsninger.

VALG AF DREJEKRANS

• For at bestemme hvilken drejekrans, De har brug for, skal der teges hensyn til flg. punkter :

• Nominelle belastninger ☐
• Overbelastninger på grund af :
  • vind ☐
  • sne ☐
  • driftsbetingelser ☐
• Belastninger på grund af dynamiske påvirkninger ☐
• Undtagelsesvise overbelastninger ☐
• Overbelastning ved test ☐
for :
• løbebanen ☐
• fortandingen ☐
• bolte og møtrikker ☐
• de maksimale driftshastigheder ☐

Ved modtagelsen af drejekransen

• Sørg for at drejekransen, som De netop har modtaget, svarer til den, De har bestilt (identifikation).

Betingelser for henstilling

• Under henstillingen, har drejekransen da været beskyttet mod påvirkninger udefra ? ☐
• Hvis henstillingen har varet i mere end 18 måneder, er drejekransen så blevet smurt igen før montering ? ☐

Før montering :

• sørg for, at drejekransen ikke har fået stød, som kan medføre, at den ikke længere opfylder specifikationerne (uoprettelige deformationer).

• at tætningerne er på plads ☐
• at tætningerne ikke er beskadiget ☐
• at redskaber til godshåndtering er i overensstemmelse med :
  • drejekransens kvalitet ☐
  • drejekransens mål ☐
  • drejekransens vægt ☐

ROLLIX

VED MODTAGELSE AF DREJEKRANSEN

Ved montering, bør De :

• undersøge
• at tilslutningsflangerne er plane ☐
• konstruktionens dimensionering ☐
• påfyldningproppens position ☐
• og positioneringen af hærdningssamlingen i forhold til kipmomenternes hovedakse. ☐

Ved fastspændingen bør De :

• undersøge
• kvaliteten af de benyttede bolte og møtrikker ☐
• antallet af benyttede bolte og møtrikker ☐
• tilspændingsværktøjets kalibrering ☐
• tilspændingsmoment ved smurte bolte ☐
• at der ikke er anvendt fjeder- eller sikringsskiver ☐
• at der er anvendt korrekte spændeskiver, hvis dette er foreskrevet ☐

Ved monteringen af drevet (hvis et sådant findes) bør De :

• undersøge
• at drevet svarer til drejekransens fortanding ☐
• at der ikke er risiko for interferens ☐
• at det minimale udsving er bestemt ☐
• at indstillingen af udsving sker ved :
  • den udvendige fortandings maksimale udsvingspunkt ☐
  • den udvendige fortandings minimale udsvingspunkt ☐
• at centerafstanden mellem drev og drejekransen ikke kan variere efter montering ☐
• at drevets længde på drejekransens fortanding er ensartet ☐

Før drejekransen tages i brug bør De sikre Dem

• at drejekransens maksimale omdrejningshastighed ikke overstiger den værdi, som den er beregnet til ☐
• at ingen elementer kan komme til at forstyrre drejekransens drift ☐
• at ingen elementer kan komme til at ødelægge pakningerne ☐
• at drejekransen og drevet ikke kan forårsage fare
  • for materiellet ☐
  • for personer ☐
• at de udførte beskyttelsesforanstaltninger er i overensstemmelse med bestemmelserne i normen 89/392 EØF ☐

• Undersøg

• slør under maksimal driftsbelastning og registrer resultatet ☐
• at omdrejningen sker uden unormal støj eller "hårde" punkter ☐

Efter igangsætningen bør De sikre Dem

• at der ikke er nogen deformationer, som kan komme til at forstyrre enhedens drift ☐
• at der ikke er nogen deformationer, som kan komme til at forkorte produktets levetid ☐

Under drift bør De sikre Dem at brugeren

• kender anvisningerne for smøring og herunder specielt
  • hvilken type smørefedt, der skal anvendes ☐
  • kender intervaller for smøring ☐
  • kender anvisningerne for smøring af : ☐
  • løbebanen ☐
  • fortandingen ☐
• kontroller pakningernes stand ☐
• kender intervallerne for :
  • undersøgelse af bolte og møtrikker ☐
  • udskiftning af bolte og møtrikker ☐
• kende det aksimale tilladelige slør for produktet før udskiftning ☐
• eller grænserne for levetid. ☐

Riduttori epicicloidali
Planetary Gearboxes

dinamic oil

NS

RE/RA 110 - 210 - 310 - 510 - 610 - 810

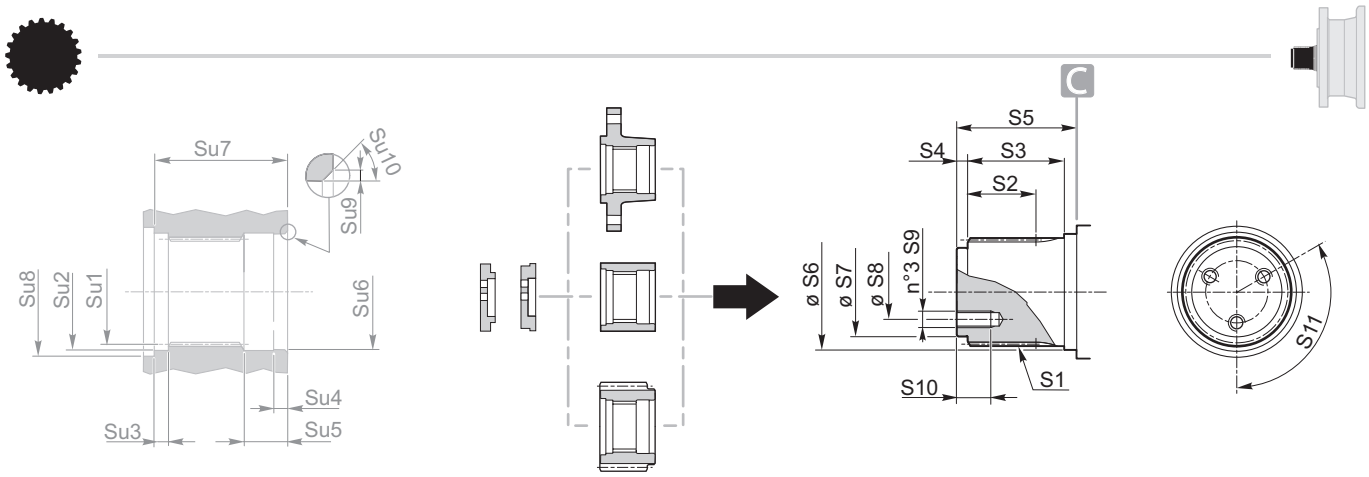

	RE - RA					
	110	210	310	510	610	810
S1	B40x36 DIN5482	B40x36 DIN5482	B58x53 DIN5482	B58x53 DIN5482	B58x53 DIN5482	B70x64 DIN5482
S2	30	30	37	37	37	51
S3	43	43	50	50	50	70
S4	5	5	8	8	8	10
S5	55	55	68.5	68.5	68.5	90
S6	42 f7	42 f7	60 f7	60 f7	60 f7	72 f7
S7	35 f7	35 f7	50 f7	50 f7	50 f7	62 f7
S8	24	24	32	32	32	40
S9	M6	M6	M10	M10	M10	M10
S10	13	13	20	20	20	22
S11	120°	120°	120°	120°	120°	120°

	RE - RA					
	110	210	310	510	610	810
Su1	A40x36 DIN5482	A40x36 DIN5482	A58x53 DIN5482	A58x53 DIN5482	A58x53 DIN5482	A70x64 DIN5482
Su2	Ø42 H7	Ø42 H7	Ø60 H7	Ø60 H7	Ø60 H7	Ø72 H7
Su3	6	6	7	7	7	11
Su4	6	6	10	10	10	10
Su5	20.5	20.5	25	25	25	29
Su6	Ø42 H7	Ø42 H7	Ø60 H7	Ø60 H7	Ø60 H7	Ø72 H7
Su7	49	49	69	69	69	80
Su8	Ø52	Ø52	Ø72	Ø72	Ø72	Ø80
Su9	1	1	1	1	1	1
Su10	1	1	1	1	1	1

		RE - RA					
	stages	110	210	310	510	610	810
A1		186	186	244	244	244	295
F0		185	185	222	222	222	280
F2		110 h7	110 h7	150 f7	150 f7	150 f7	200 f7
F3		165	165	195	195	195	250
F4		5	5	13.5	13.5	13.5	10.5
F5		12	12	16	16	16	18
F6		Ø10.5	Ø10.5	Ø12.5	Ø12.5	Ø12.5	Ø15
		M.. - 12.9					
		M10	M10	M12	M12	M12	M14
F7		45°	45°	36°	36°	36°	30°
F8		22.5°	22.5°	—	—	—	—
FA1		6.5	6.5	15	15	15	40
FL	1	95	107	133	151	151	162.5
	2	138	150	185.5	215.5	209.5	229.5
	3	181	193	228.5	258.5	262	282
	4	224	236	271.5	301.5	305	325
FL7	2	176	188	255	273	273	304.5
	3	219	231	266.5	296.5	331.5	351.5
	4	262	274	309.5	339.5	343	363
FL8	2	250.5	262.5	346	364	364	412.5
	3	293.5	305.5	341	371	422.5	442.5
	4	336.5	348.5	384	414	417.5	437.5
T3	2	113.8	113.8	171.5	171.5	171.5	277
	3	113.8	113.8	113.8	113.8	171.5	171.5
	4	113.8	113.8	113.8	113.8	113.8	113.8
T4	2	184	184	183	183	183	242
	3	184	184	184	184	183	183
	4	184	184	184	184	184	184

dinamic oil

RE/RA 110 - 210 - 310 - 510 - 610 - 810

NS

110 - 210
310 - 510

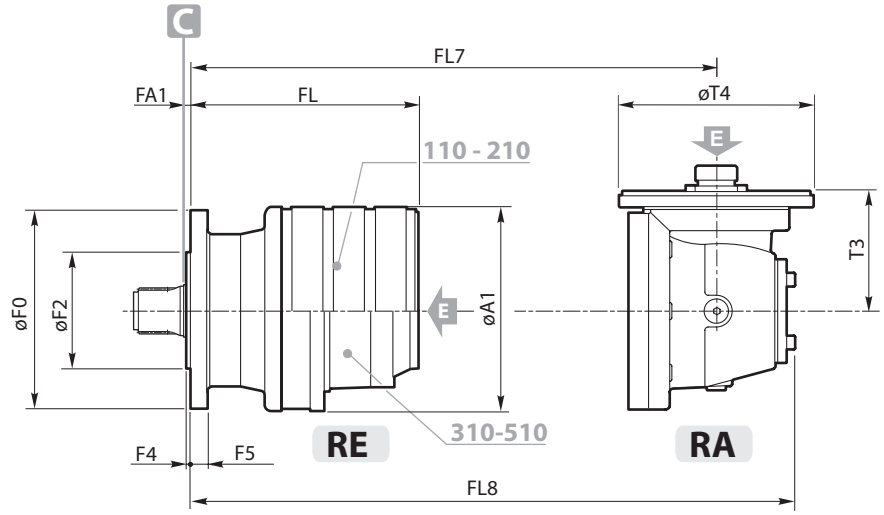

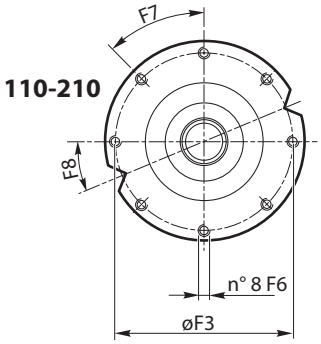

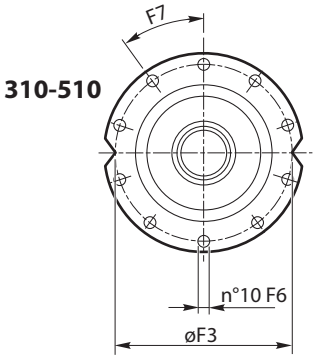

610

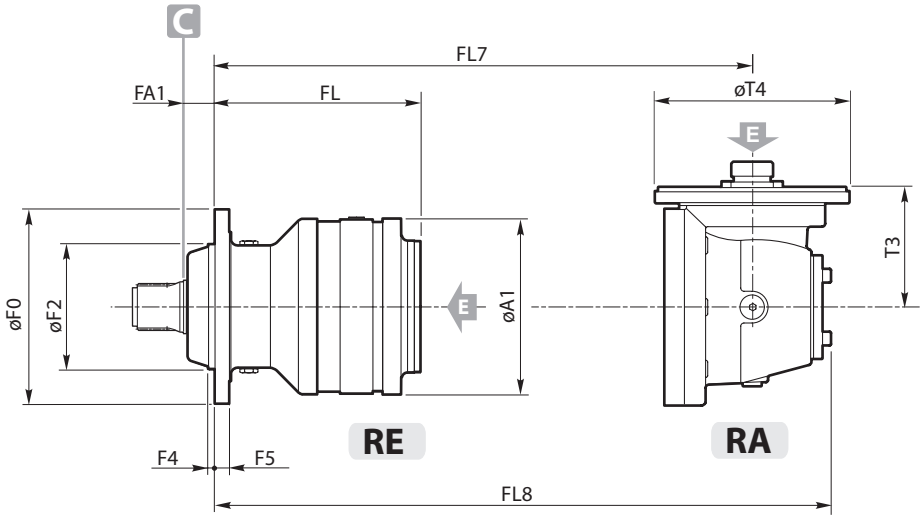

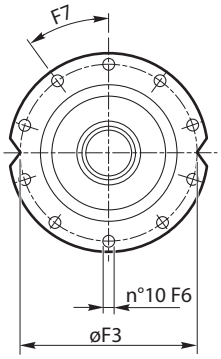

810

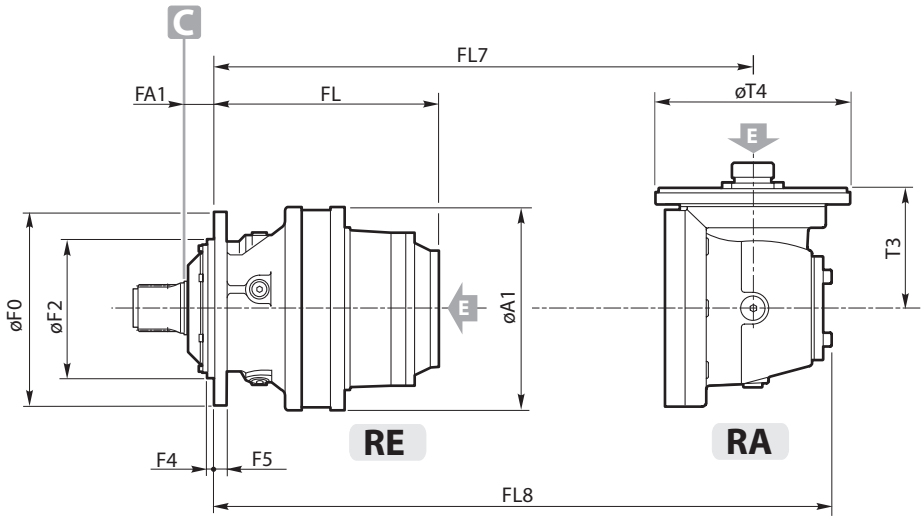

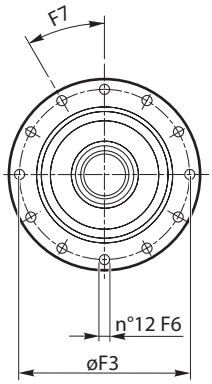

ST

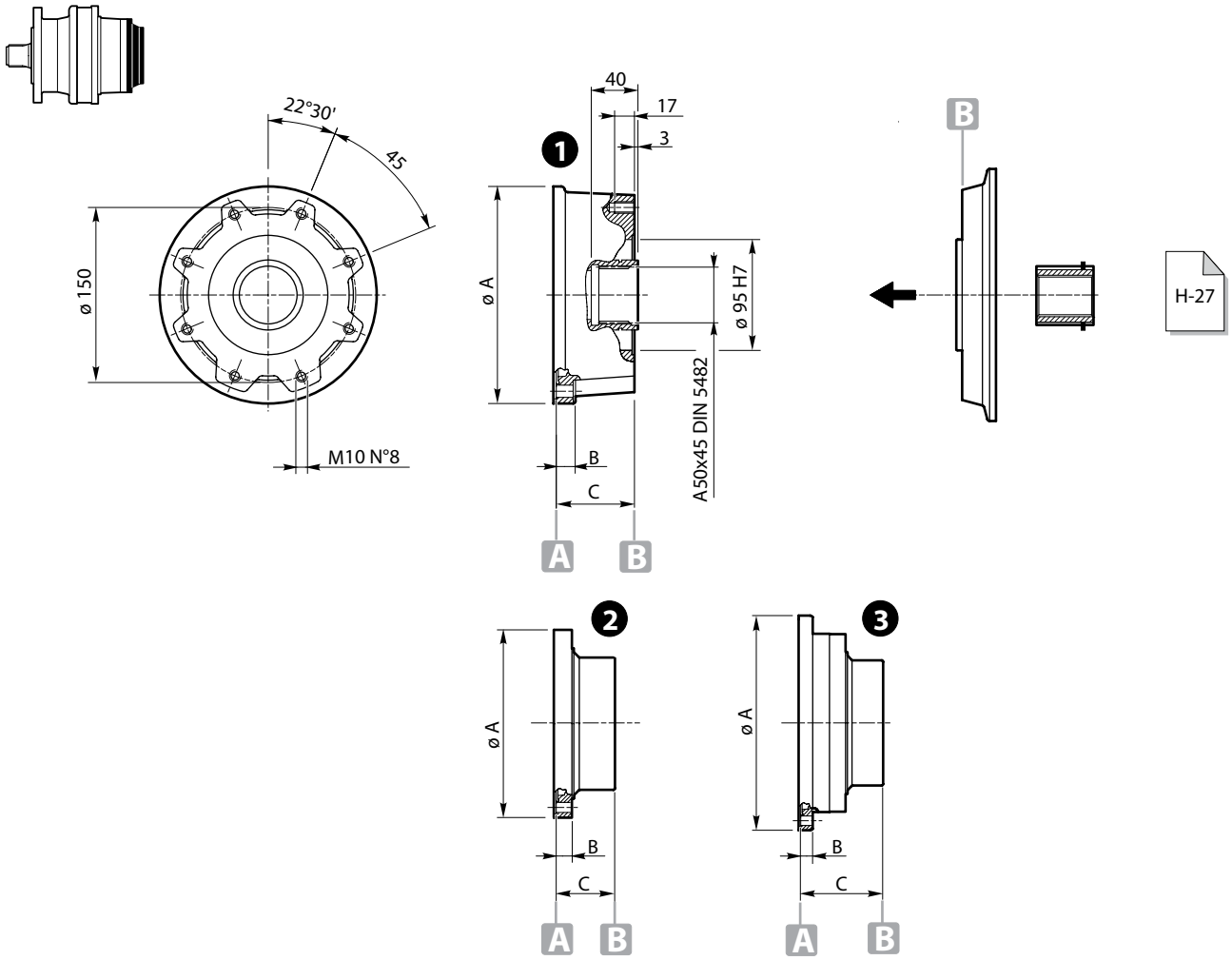

1

ø A	B	C	Code
186	14.5	67	K0700A1

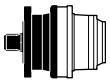

RE 111 - 112 - 113 - 114
RE 211 - 212 - 213 - 214
RE 241 - 242 - 243 - 244
RE 312 - 313 - 314
RE 512 - 513 - 514
RE 613 - 614
RE 813 - 814
RE 1023 - 1024
RE 1523 - 1524
RE 2004
RE 2524
RE 3004
RE 3514-4804
RE 6004L
RE 8005 - 8005L
GB 12015 - 12015L
GB 16005 - 16005L
CC30-CC120

2

ø A	B	C	Code
244	20.5	76.5	K0700D2

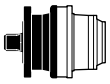

RE 311-511
RE 611 - 612
RE 812-1022
RE 1522-2003
RE 2523-3003
RE 3513-4803
RE 6003 - 6003L
RE 6004 - 6004L
RE 8004 - 8004L
GB 12014 - 12014L
GB 16004 - 16004L
GB 21004 - 21005
GB 26005-31005
GB 40005-45005
GB 53005
CC350

3

ø A	B	C	Code
295	16	121	K0700D2

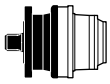

RE 811
RE 1021
RE 2522
RE 3002
RE 3512
RE 8003 - 8003L
GB 12013 - 12013L
GB 16003L
GB 26004
GB 31004
GB 40004
GB 85005
GB 110005
CC1000
CC600

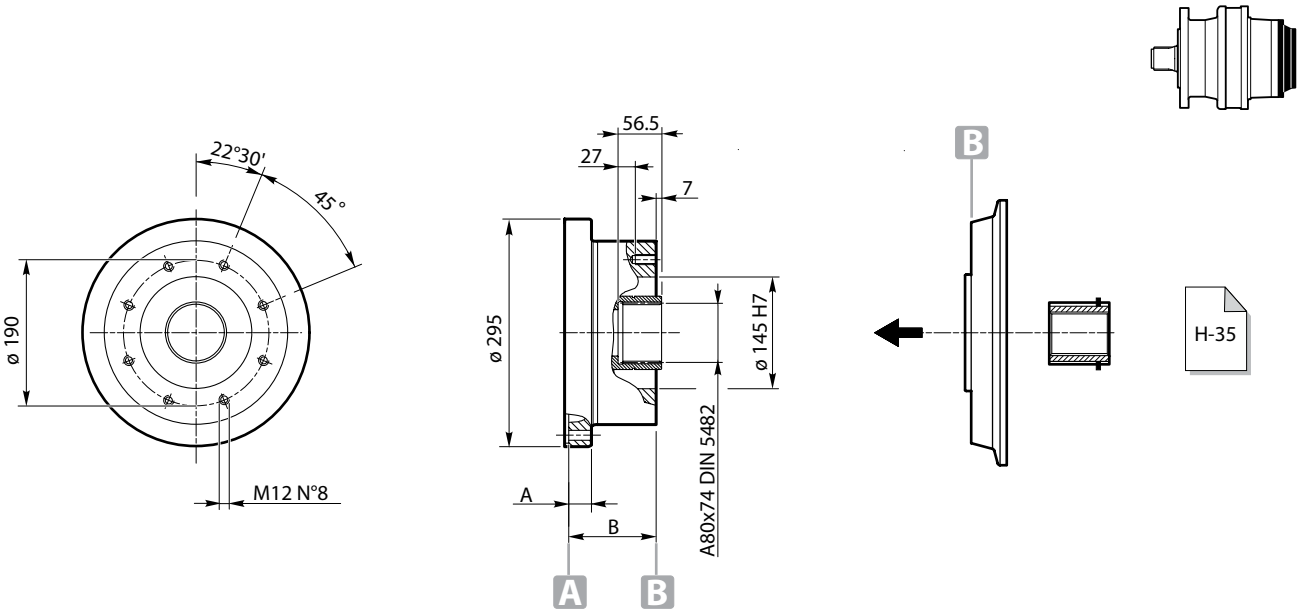

	A	B	Code
RE 811	30	114	K0700D3
RE 1021			
RE 2522			
RE 3002			
RE 3512			
RE 8003 - 8003L			
GB 12013 - 12013L			
GB 16003L			
GB 26004			
GB 31004			
GB 40004			
GB 85005			
GB 110005			
CC600	50	134	
CC1000	61	145	

CC30 - CC120

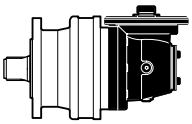

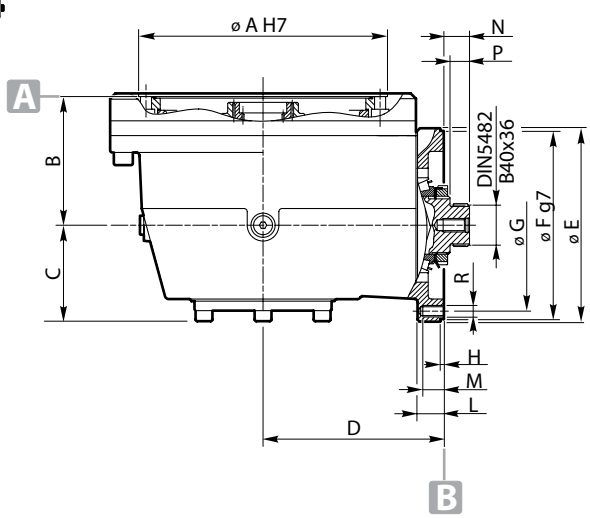

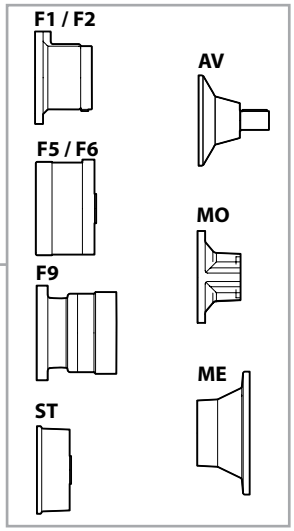

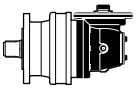

		øA	B	C	D	øE	øF	øG	H	L	N	P	R
CC30 **110/210/240**	**RA 112-113-114** **RA 212-213-214** **RA 242-243-244** **RA 313-314** **RA 513-514** **RA 814** **RA 1024** **RA 1524** **RA 2004L**	178	84	71.5	113.8	184	178	165	4	15.7	23.75	18.25	N°8-M10 AT 45°

		øA	B	C	D	øE	øF	øG	H	L	M	P	R
CC120 **310/510/610**	**RA 312** **RA 512-612** **RA 613-813** **RA 1023** **RA 1523** **RA 2003-2003L** **RA 2524** **RA 3004** **RA 3514** **RA 4804** **RA 6004-6004L** **GBA 12015-12015L** **GBA 16005-16005L** **GBA 21005**	236	122	91	171.5	183	178	165	3.5	25	24.25	18.5	N°8-M10 AT 45°

CC350 - CC600

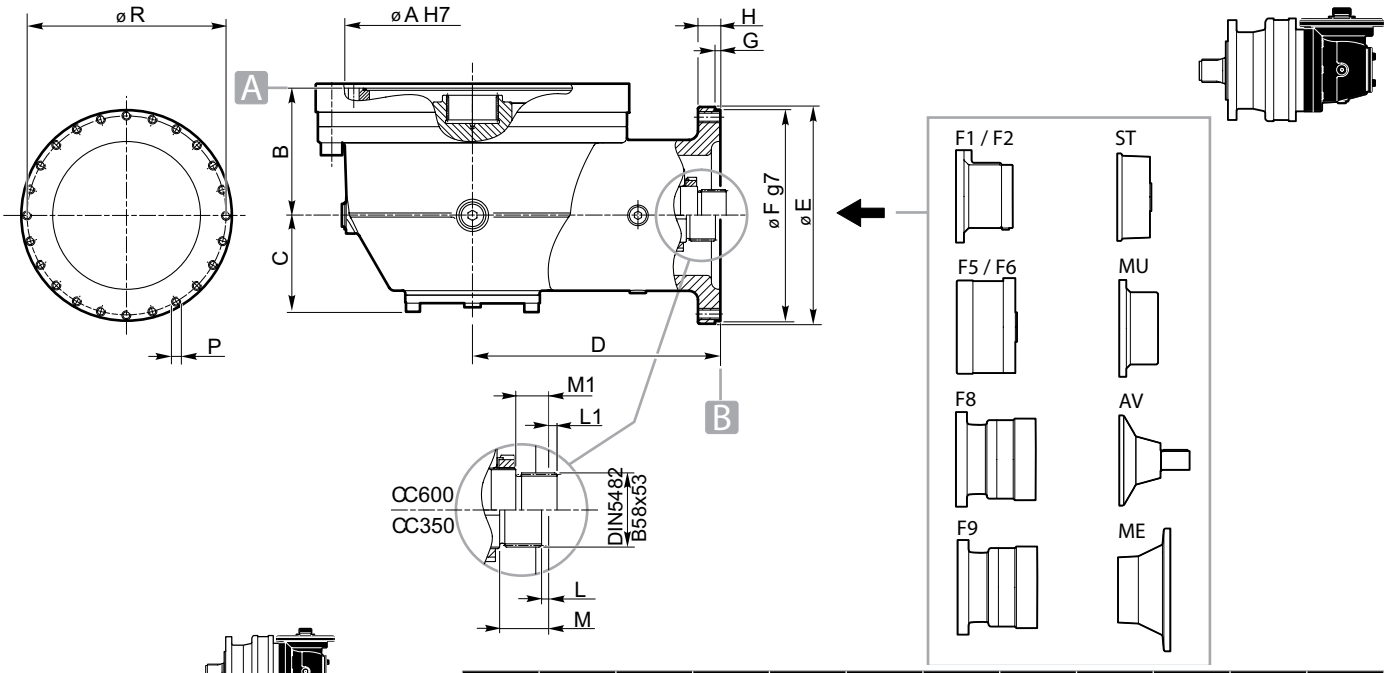

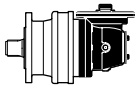

		øA	B	C	D	øE	øF	G	H	L	M	P	R
CC350 **810/1020**	**RA 812** **RA 1022** **RA 2523** **RA 3023** **RA 3523** **RA 8004-8004L** **GBA 12014-12014L** **GB 16004L** **GBA 26005** **GBA 31005** **GBA 40005**	285	142	108	276.75	242	236	6	25	5,5	38	N°24- M10 AT 15°	222

		øA	B	C	D	øE	øF	G	H	L1	M1	P	R
CC600 **810/1020**	**RA 812** **RA 1022** **RA 2523** **RA 3023** **RA 3523** **RA 8004** **GBA 12014** **GBA 16004** **GBA 26005** **GBA 31005** **GBA 40005**	285	198	128	310	293	285	8	27	6,5	25,5	N°12- M10 AT 30°	265

		øA	B	C	D	øE	øF	G	H	L1	M1	P	R
CC600 **1520/2000**	**RA 1522** **RA 2002** **RA 4803** **RA 6003-6003L** **GBA 16014** **GBA 21004** **GBA 45005** **GBA 53005** **GBA 61005**	340	206	128	310	293	285	8	27	6,5	25,5	N°12- M10 AT 30°	265

		øA	B	C	D	øE	øF	G	H	L1	M1	P	R
CC600 **2520/3000**	**RA 2522** **RA 3002** **RA 8003-8003L** **GBA 12013-12013L** **GBA 26004** **GBA 31004** **GBA 40004** **GBA 85005** **GBA 110005**	395	194	128	310	293	285	8	27	6,5	25,5	N°12- M10 AT 30°	265

CC1000

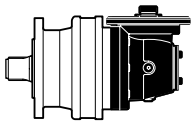

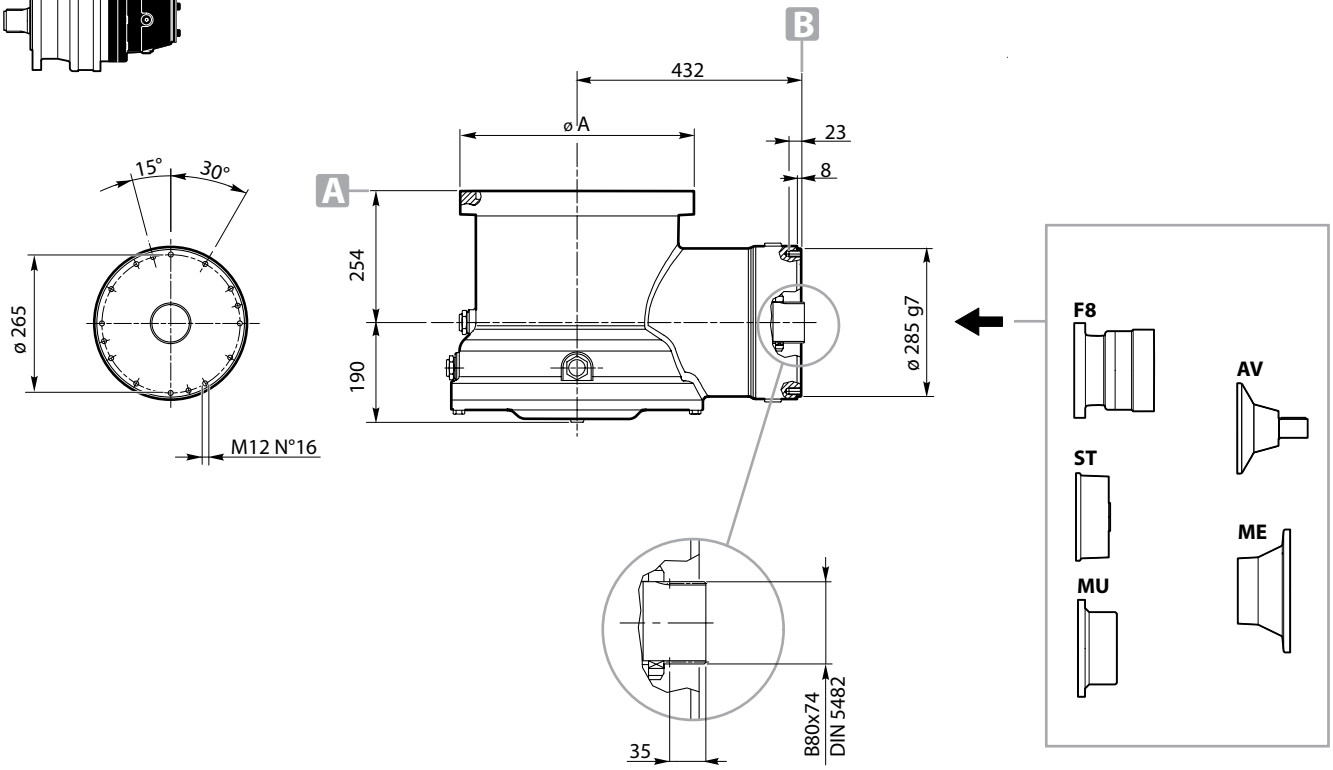

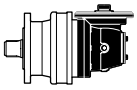

		ø A
CC1000	**RA 3512-4802**	452
	RA 6002-8002	490
	GBA 16003-16003L	452
	GBA 21003-26003	490
	GBA 45004	452
	GBA 53004-61004	490
	GBA 85004	490
	GBA 130005	452

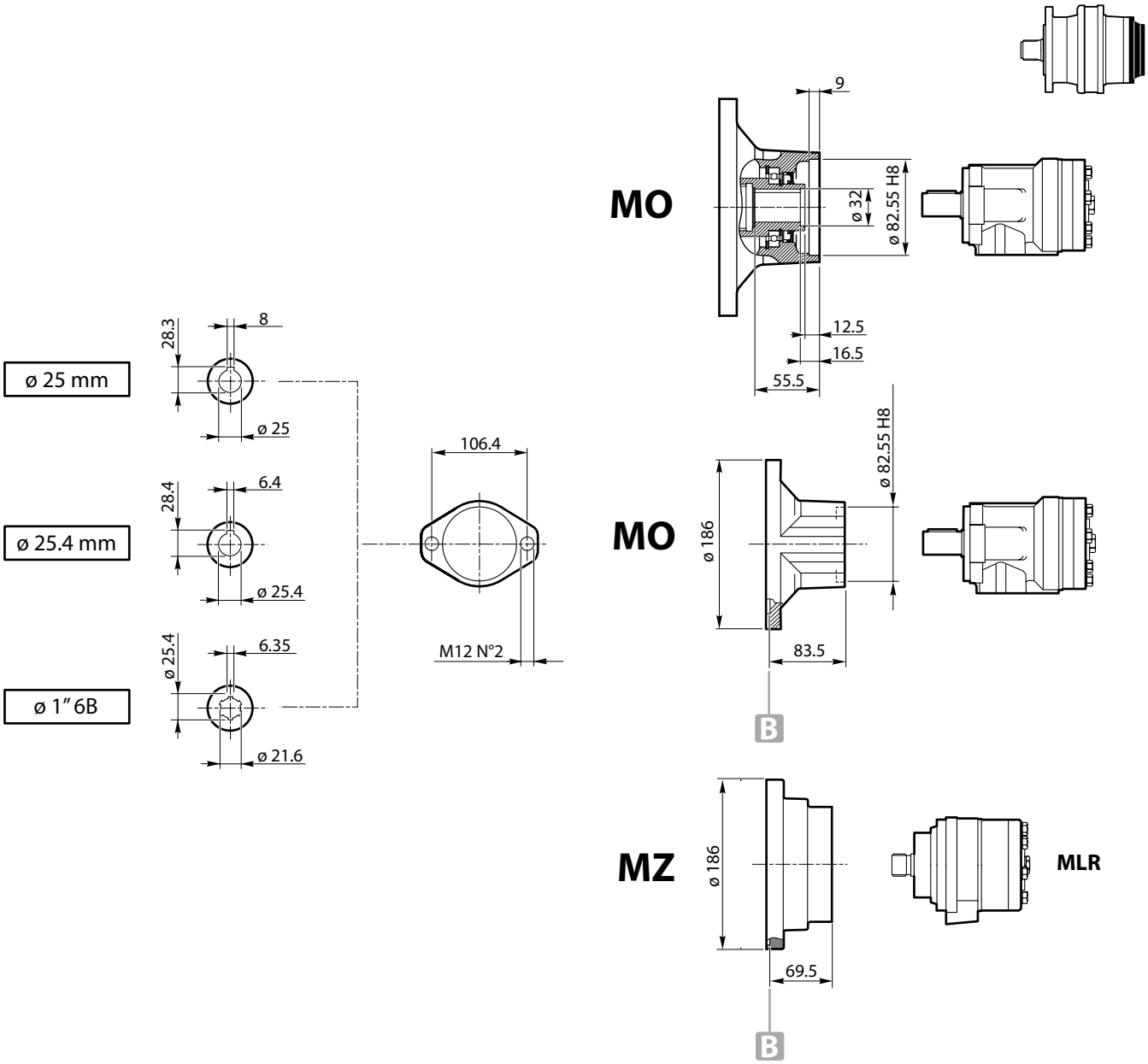

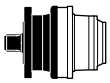

	Type	Code
RE 111 - 112 - 113 - 114	MO 25	K0700AA
RE 211 - 212 - 213 - 214	MO 25.4	K0700AB
RE 241 - 242 - 243 - 244	MO 1"6B	K0700AC
RE 312 - 313 - 314	MZ	—
RE 512 - 513 - 514		
RE 613 - 614		
RE 813 - 814		
RE 1023 - 1024		
RE 1523 - 1524		
RE 2004		
RE 2524		
RE 3004		
RE 3514-4804		
RE 6004L		
RE 8005 - 8005L		
GB 12015 - 12015L		
GB 16005 - 16005L		
CC30-CC120		

ME

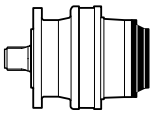

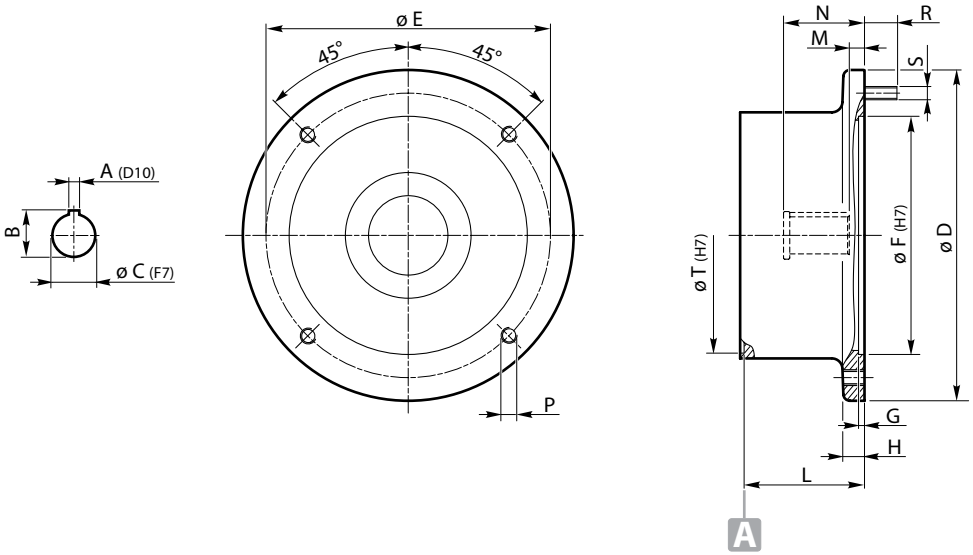

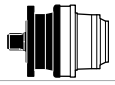

	Input type	Shaft			Flange											
		A	B	C	D	E	F	G	H	L	M	N	P	R	S	T
RE 111 - 112 - 113 - 114 RE 211 - 212 - 213 - 214 RE 241 - 242 - 243 - 244 RE 312 - 313 - 314 RE 512 - 513 - 514 RE 613 - 614 RE 813 - 814 RE 1023 - 1024 RE 1523 - 1524 RE 2004 - RE 2004L RE 2524 RE 3004 RE 3514 - 4804 RE 6004L RE 8005 - 8005L GB 12015 - 12015L GB 16005 - 16005L CC30-CC120	**ME 80**	6	21.8	19	200	165	130	4	16	82.5	6.5	44.5	—	25	N'4-M10	178
	ME 90	8	27.3	24	200	165	130	4	16	82.5	11.5	52	—	25	N'4-M10	
	ME 100/112	8	31.3	28	250	215	180	4.5	16	91	11.5	61	N°4-M12	—	—	
	ME 132	10	41.3	38	300	265	230	5	20	115.5	8	82.5	N°4-M12	—	—	
	ME 160	12	45.3	42	350	300	250	6	20	145	23	110.5	N°4-M16	—	—	
	ME 180	14	51.8	48	350	300	250	6	20	145	23	110.5	N°4-M16	—	—	

	Input type	Shaft			Flange											
		A	B	C	D	E	F	G	H	L	M	N	P	R	S	T
RE 311-511 RE 611 - 612 RE 812 -1022 RE 1522 - 2002 - 2002L RE 2003 RE 2523 - 3003 RE 3513 - 4803 RE 6003 - 6003L RE 6004 - 6004L RE 8004 - 8004L GB 12004 - 12004L GB 16004 - 16004L GB 21004 - 21005 GB 26005 - 31005 GB 40005 - 45005 GB 53005 CC350	**ME132**	10	41.3	38	300	265	230	5	20	125.5	8	82.5	N°4-M12	—	—	236
	ME160	12	45.3	42	344	300	250	7	20	154.5	23	110.5	N°4-M16	—	—	
	ME180	14	51.8	48	344	300	250	7	20	154.5	23	110.5	N°4-M16	—	—	
	ME225	18	64.4	60	450	400	350	7	20	191.5	30	143.5	N°4-M16	—	—	

	Input type	Shaft			Flange											
		A	B	C	D	E	F	G	H	L	M	N	P	R	S	T
RE 811 RE 1021 RE 2522 RE 3002 RE 3512 RE 8003 - 8003L GB 12013 - 12013L GB 16003L GB 26004 GB 31004 GB 40004 GB 85005 GB 110005 CC600 - CC1000	**ME200**	16	59.3	55	400	350	300	7	18	165	11.5	114.5	N°4-M18	—	—	285
	ME225	18	64.4	60	450	400	350	7	20	194	30.5	143.5	N°8-M18	—	—	
	ME250	18	6.4	65	550	500	450	7	22	195	17	145	N°8-ø19	—	—	
	ME280	20	79.9	75	550	500	450	7	22	195	12	145	N°8-ø19	—	—	

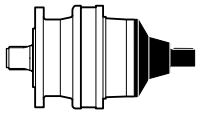

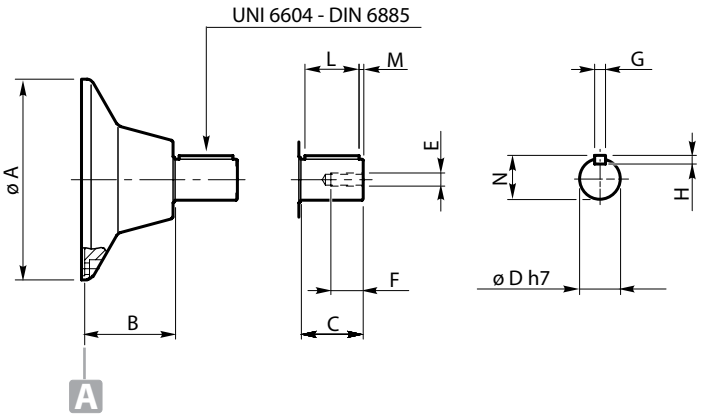

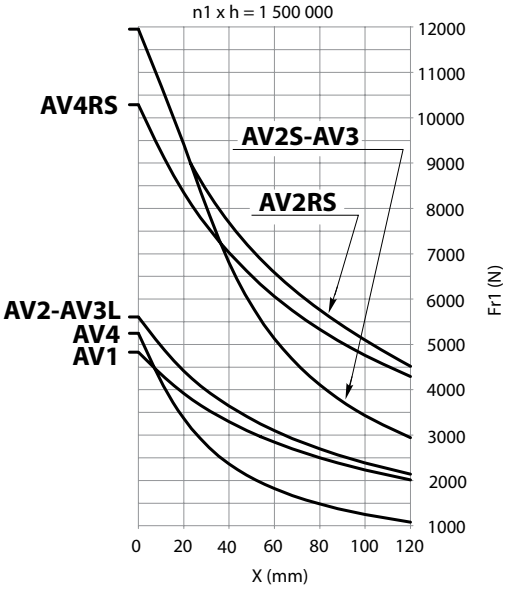

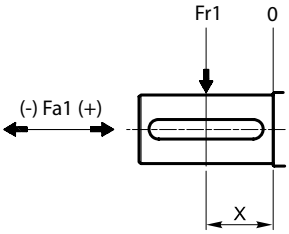

	n1 x h = 1 500 000 Fa1 max (Fr1 = 0)	
	Fa1 (+)	Fa1 (-)
AV1	4 800	4 800
AV2 - AV3L - AV4	7 800	7 800
AV2S - AV3	4 900	7 800
AV2RS - AV4RS	4 900	4 900

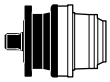

	Type	øA	B	C	øD	E	F	G	H	L	M	N	Code
RE 111 - 112 - 113 - 114 **RE 211 - 212 - 213 - 214** **RE 241 - 242 - 243 - 244** **RE 312 - 313 - 314** **RE 512 - 513 - 514** **RE 613 - 614 - 813 - 814** **RE 1023 - 1024 -1523 - 1524** **RE 2000 - 2524 - 3004 -3514** **RE 4804 - 6004L - 8005 - 8005L** **GB 12015 - 12015L** **GB 16005 - 16005L** **CC30-CC120**	**AV1** **AV2** **AV3L** **AV4** **AV4RS**	186 186 186 186 186	83.5 96.5 96.5 108.5 108.5	58 82 82 65 65	38 42 48 40 40	M12 M12 M16 M12 M12	30 30 40 30 30	10 12 14 12 12	8 8 9 8 8	50 70 70 60 60	4 6 6 2.5 2.5	41 45 51.5 43 43	K0700AH K0700AI K0700AI K0700AX K0700AX

	Type	øA	B	C	øD	E	F	G	H	L	M	N	Code
RE 311-511-611-612 **RE 812-1022-1522-2003** **RE 2523-3003-3513-4803** **RE 6003-6003L-6004-6004L** **RE 8004-8004L** **GB 12014-12014L-16004-16004L** **GB 21004-21005-26005-31005** **GB 40005-45005-53005** **GB 61005** **CC350-CC600**	**AV2** **AV2S** **AV2RS** **AV3** **AV4** **AV4RS**	244 244 244 244 244 244	106 106 106 106 118 118	82 82 82 82 65 65	42 42 42 48 40 40	M12 M12 M12 M16 M12 M12	30 30 30 40 30 30	12 12 12 14 12 12	8 8 8 9 8 8	70 70 70 70 60 60	6 6 6 6 2.5 2.5	45 45 45 51.5 43 43	K0700DL K0700DL K0700DL K0700DM K0700DJ K0700DJ

AVF-AV110N-NL

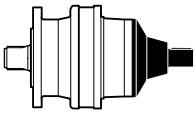

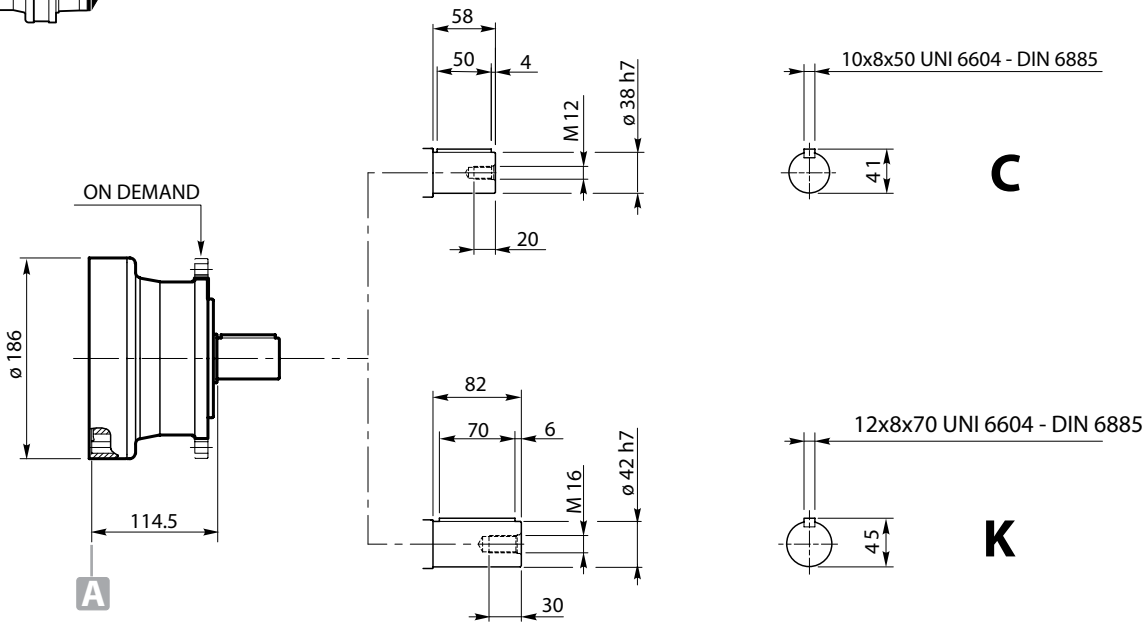

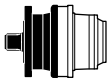

	Code
RE 111 - 112 - 113 - 114	K0700AY
RE 211 - 212 - 213 - 214	
RE 241 - 242 - 243 - 244	
RE 312 - 313 - 314	
RE 512 - 513 - 514	
RE 613 - 614	
RE 813 - 814	
RE 1023 - 1024	
RE 1523 - 1524	
RE 2004	
RE 2524	
RE 3004	
RE 3514	
RE 4804	
RE 6004L	
RE 8005 - 8005L	
GB 12015 - 12015L	
GB 16005 - 16005L	
CC30-CC120	

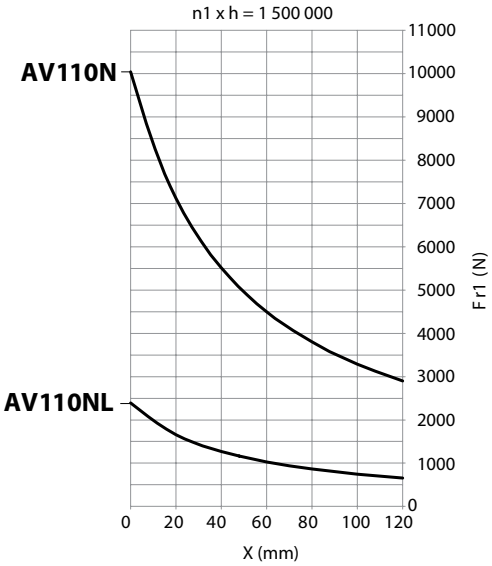

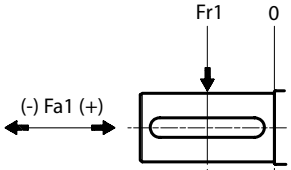

	n1 x h = 1 500 000 Fa1 max (Fr1 = 0)	
	Fa1 (+)	Fa1 (-)
AV110N	4 900	7 800
AV110NL	3 750	3 750

AVF-AV510N-NL

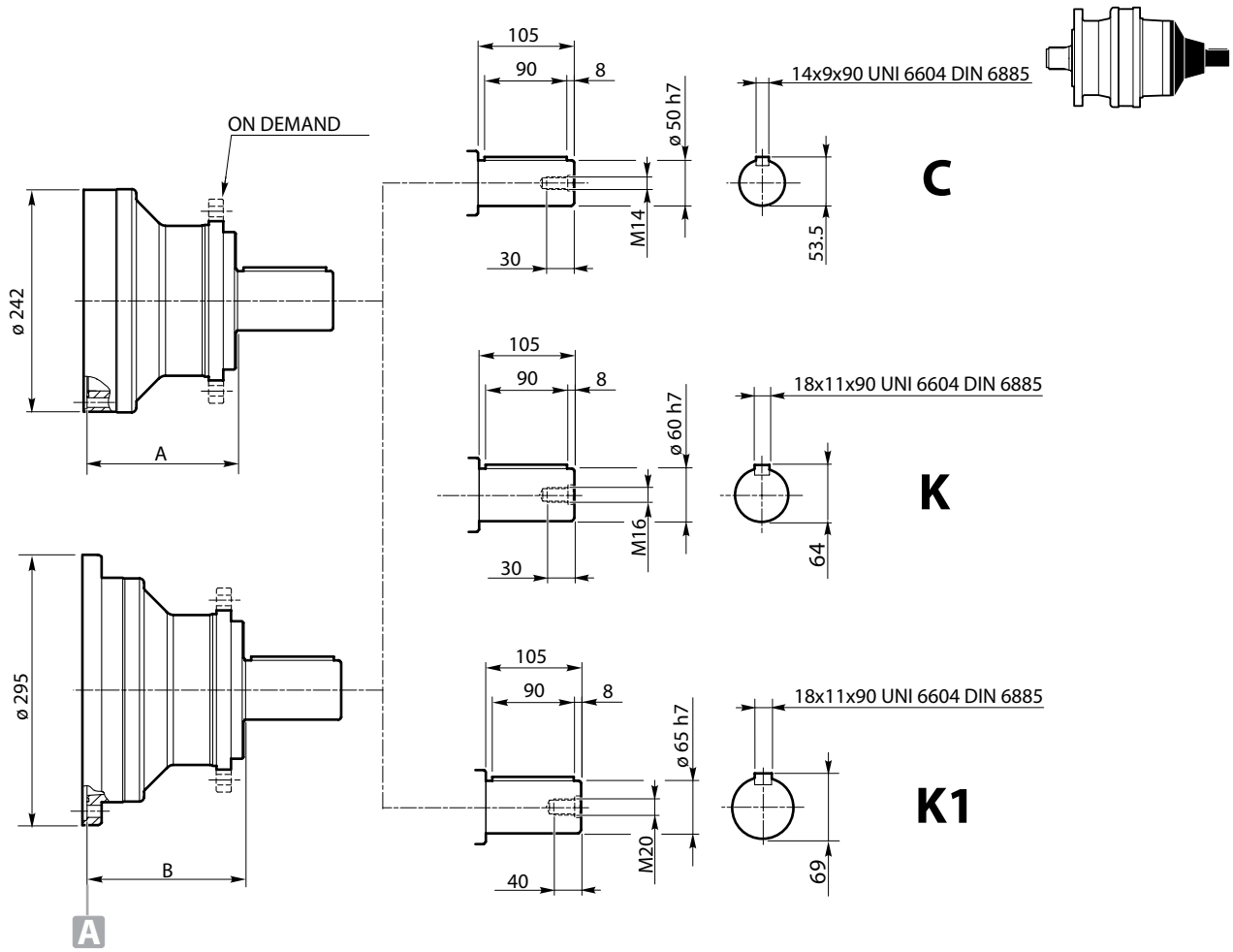

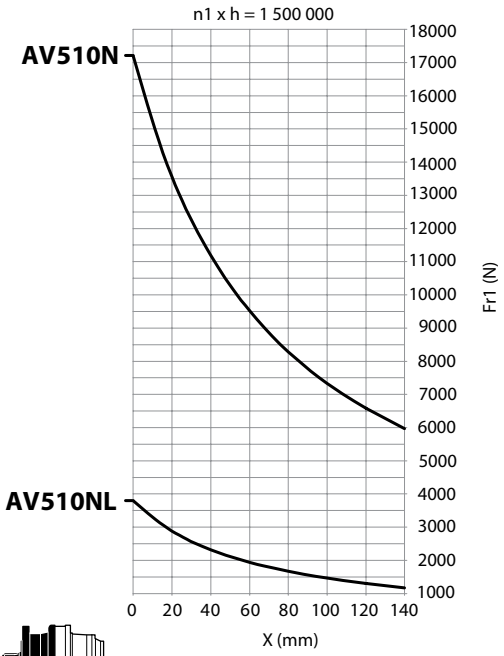

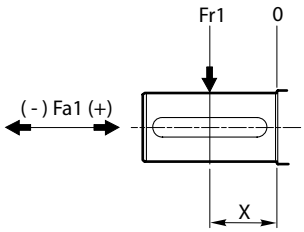

	n1 x h = 1 500 000 Fa1 max (Fr1 = 0)	
	Fa1 (+)	Fa1 (-)
AV510NL	6 600	6 600
AV510N	15 250	15 250

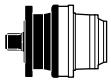

	A	B
RE 311-511-611-612-812-1022-1522-2003-2523-3003-3513-4803-6003-6003L	164	—
RE 6004-6004L-8004-8004L	164	—
GB 12014-12014L-16004-16004L-21004-21005-26005-31005-40005-45005	164	—
GB 53005-61005	—	172.5
RE 811-1021-2522-3002-3512-8003-8003L	—	172.5
GB 12013-12013L-16003L-26004-31004-40004-85005-110005	—	172.5
CC350	128	—
CC600	—	153

AVF-AV510TL

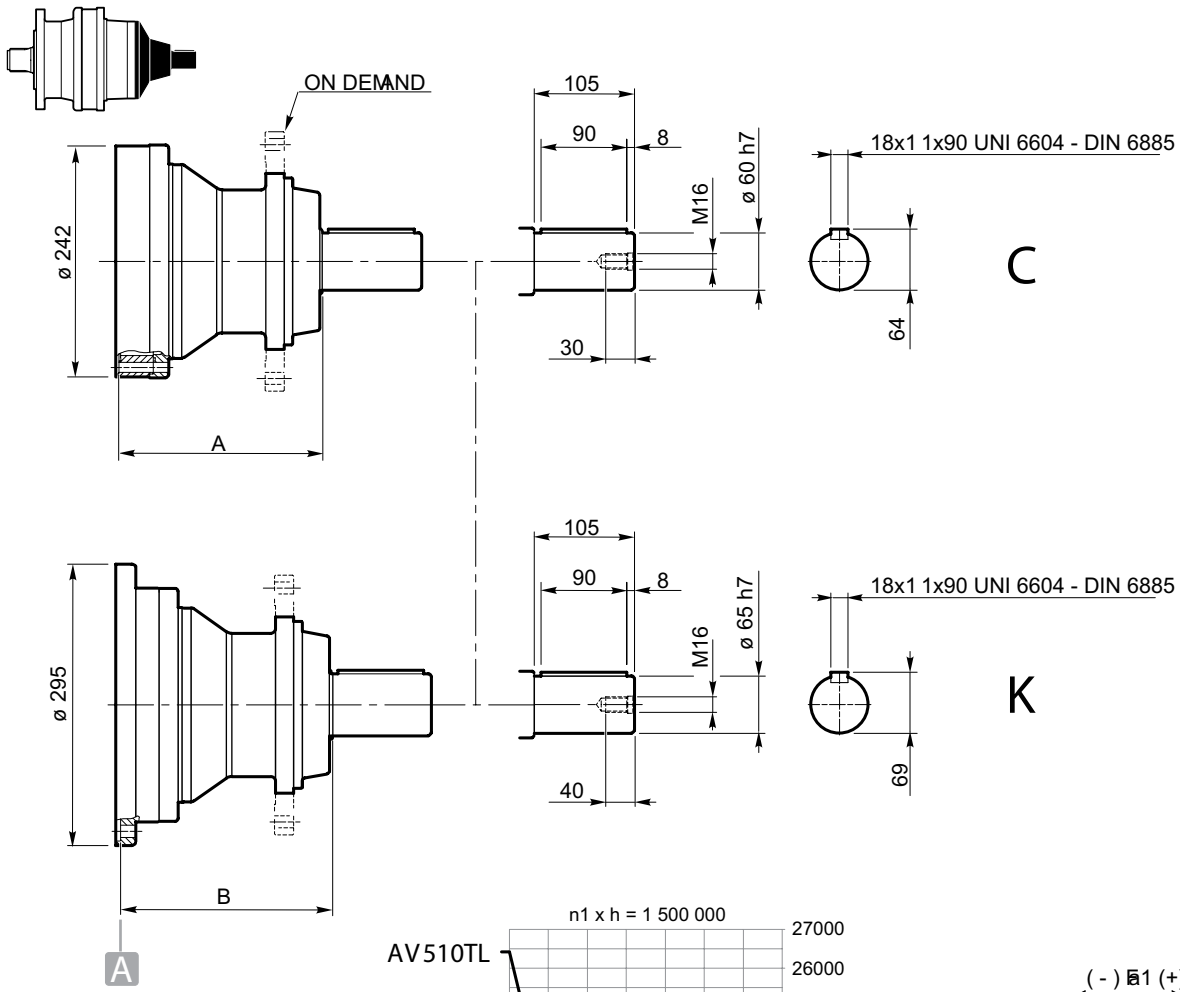

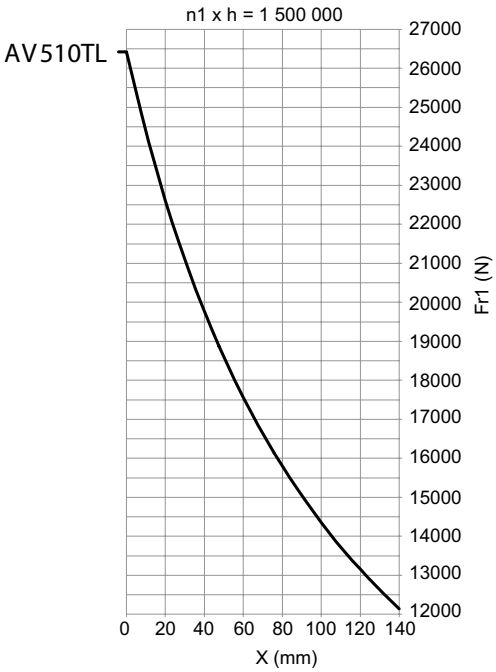

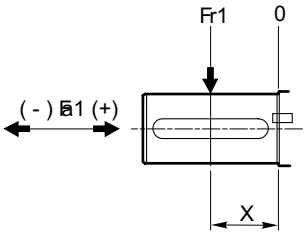

	n1 x h = 1 500 000 Fa1 max (Fr1 = 0)	
	Fa1 (+)	Fa1 (-)
AV510TL	21 600	21 600

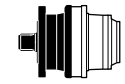

	A	B
RE 311-511-611-612-812-1022-1522-2003-2523-3003-3513-4803-6003-6003L	212	—
RE 6004-6004L-8004-8004L	212	—
GB 12014-12014L-16004-16004L-21004-21005-26005-31005-40005-45005	212	—
GB 53005-61005	212	—
RE 811-1021-2522-3002-3512-8003-8003L	—	221
GB 12013-12013L-16003L-26004-31004-40004-85005-110005	—	221
CC350	176	—
CC600	—	201

AVF-AV810N-NL

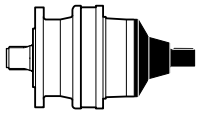

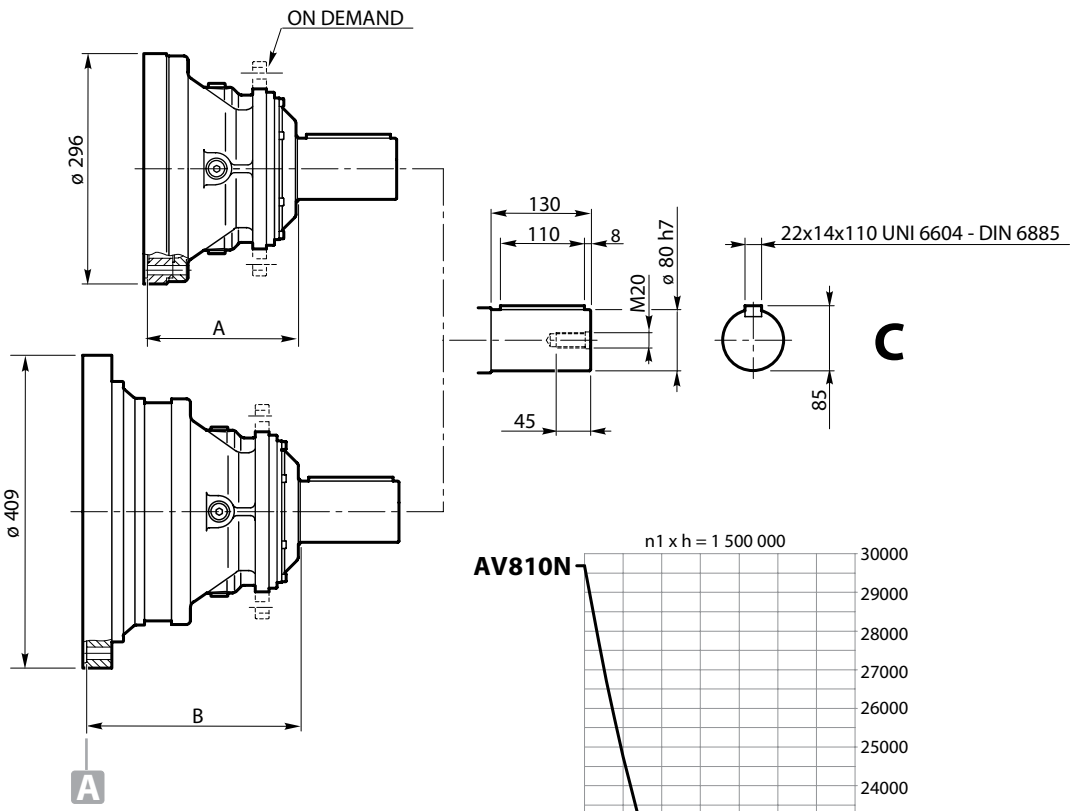

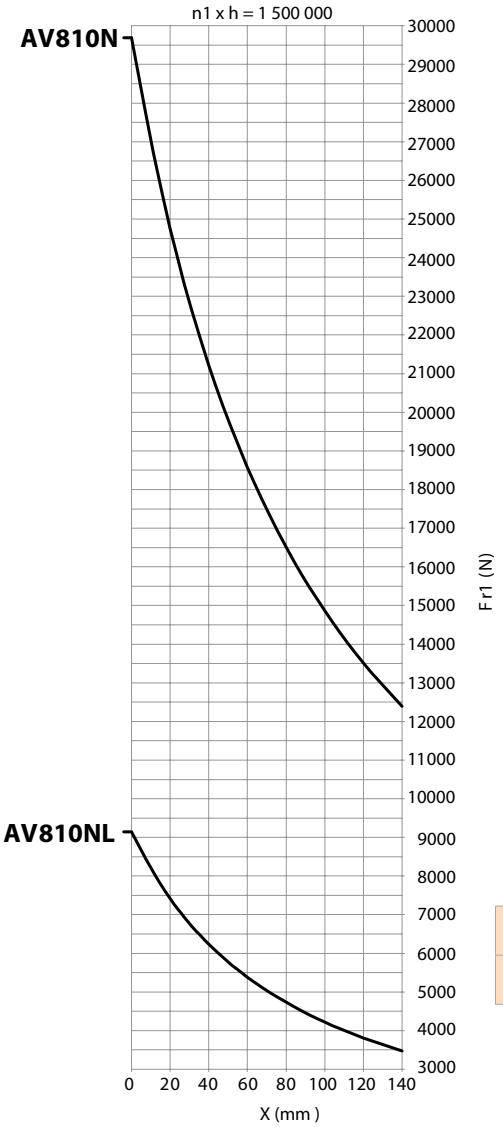

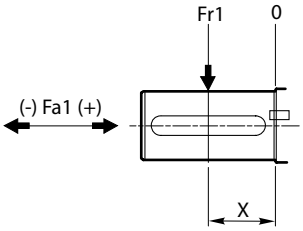

	n1 x h = 1 500 000 Fa1 max (Fr1 = 0)	
	Fa1 (+)	Fa1 (-)
AV810NL	14 800	14 800
AV810N	25 900	25 900

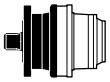

	A	B
RE 811-1021-2522-3002-3512-8003-8003L	195.5	—
GB 12013-12013L-16003L-26004-31004-40004-85005-110005	195.5	—
RE 2521-3001-8002-8002L	—	278
GB 12012-12012L-26003-31003-40003-85004-110004-205005-235005	—	278
CC600	162.5	—
CC1000	162.5	—

AVF-AV810T-TL

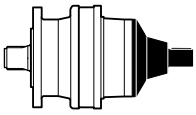

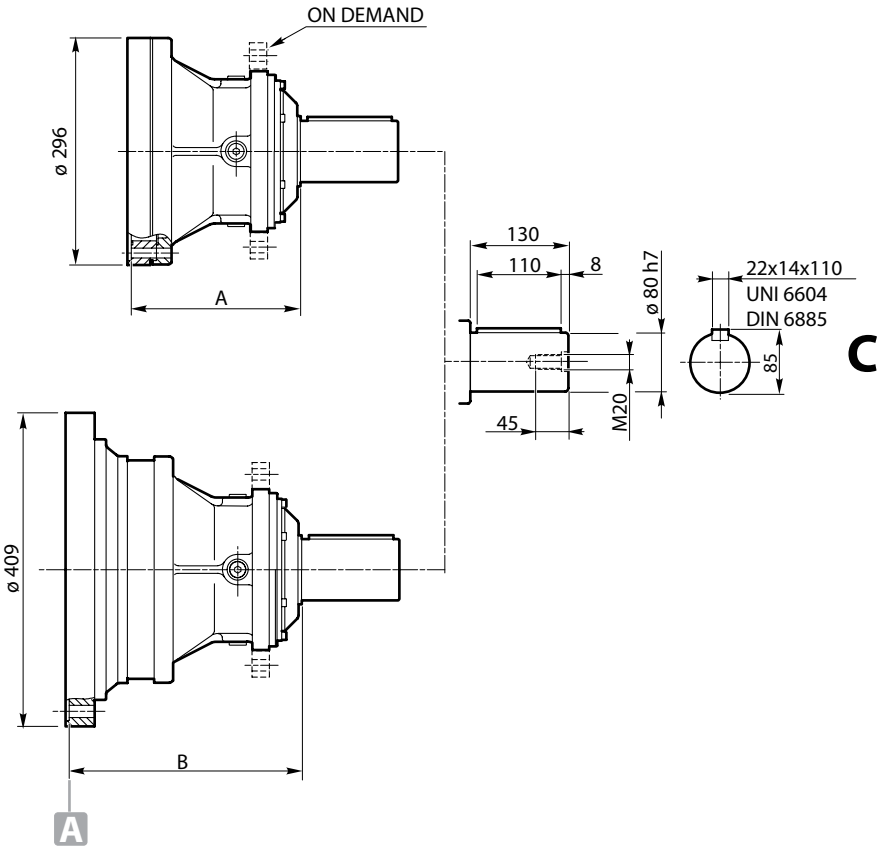

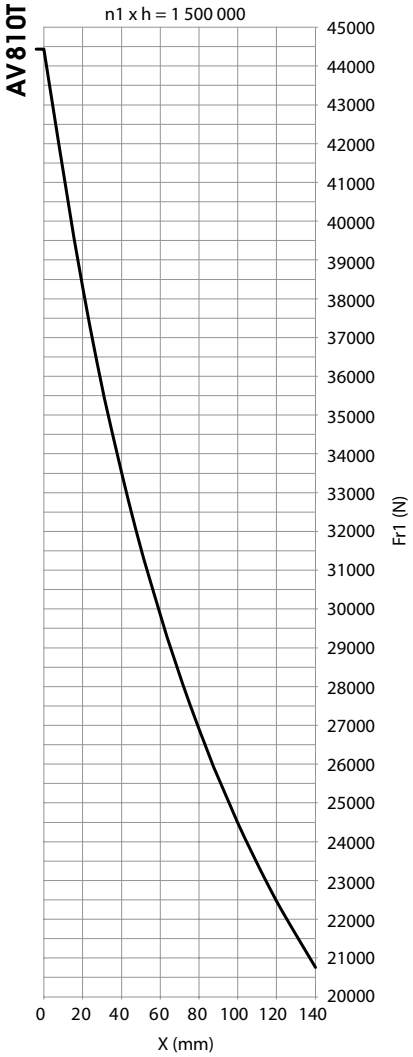

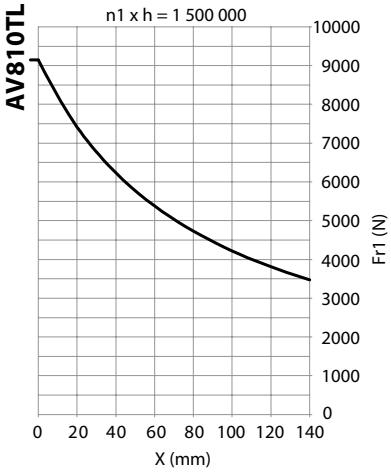

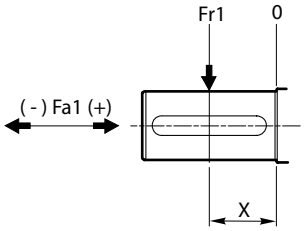

	n1 x h = 1 500 000 Fa1 max (Fr1 = 0)	
	Fa1 (+)	Fa1 (-)
AV810T	39 200	25 900

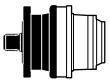

	A	B
RE 811-1021-2522-3002-3512-8003-8003L	218	—
GB 12013-12013L-16003L-26004-31004-40004-85005-110005	218	—
RE 2521-3001-8002-8002L	—	296
GB 12012-12012L-26003-31003-40003-85004-110004-205005-235005	—	296
CC600	185	—
CC1000	185	—

AVF-AV1020T-TL

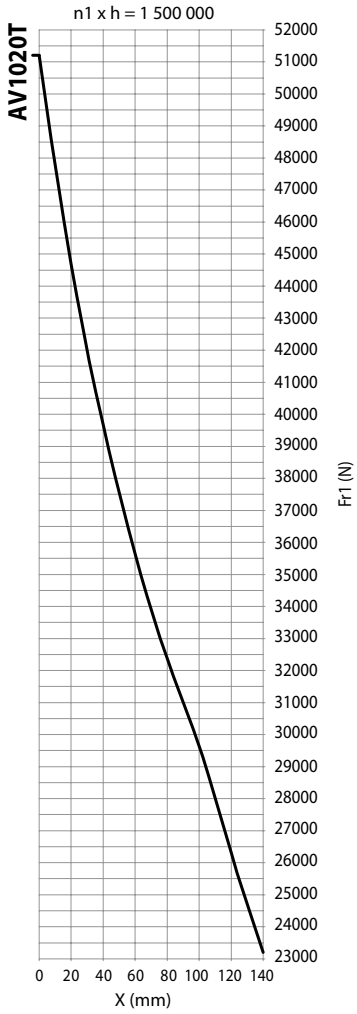

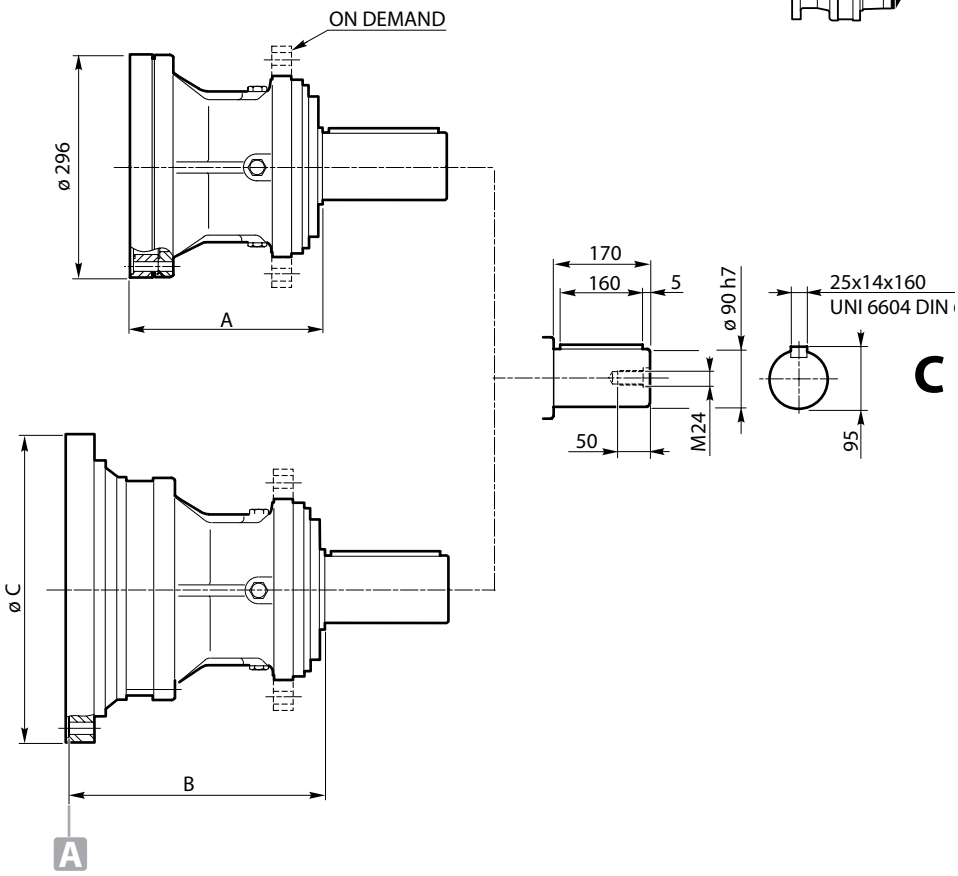

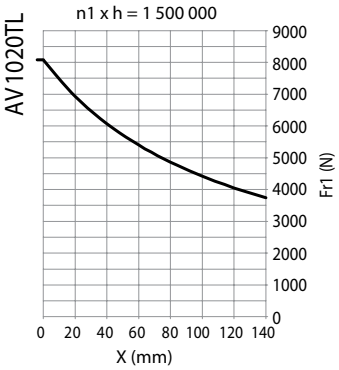

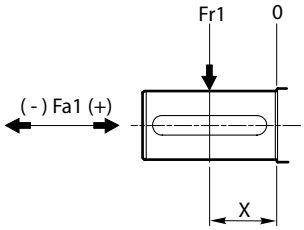

	n1 x h = 1 500 000 Fa1 max (Fr1 = 0)	
	Fa1 (+)	Fa1 (-)
AV1020T	46 450	26 850

	A	B	C
RE 811-1021-2522-3002-3512-8003-8003L	249	—	—
GB 12013-12013L-16003L-26004-31004-40004-85005-110005	249	—	—
RE 2521-3001-8002-8002L	—	327	409
GB 12012-12012L-26003-31003-40003-85004-110004	—	327	409
RE 3511-4801	—	348	452
GB 16002-16002L-45003-130004	—	348	452
CC1000	216	—	—

AVF-AV1520T

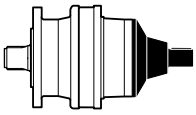

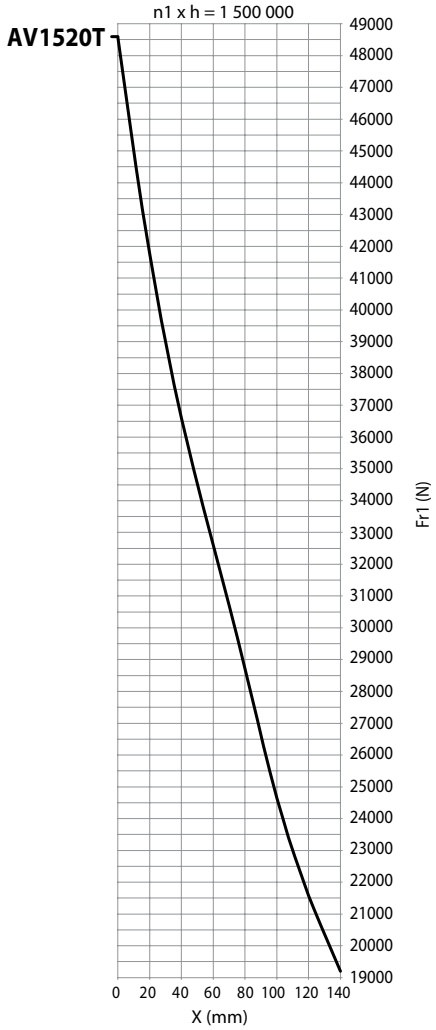

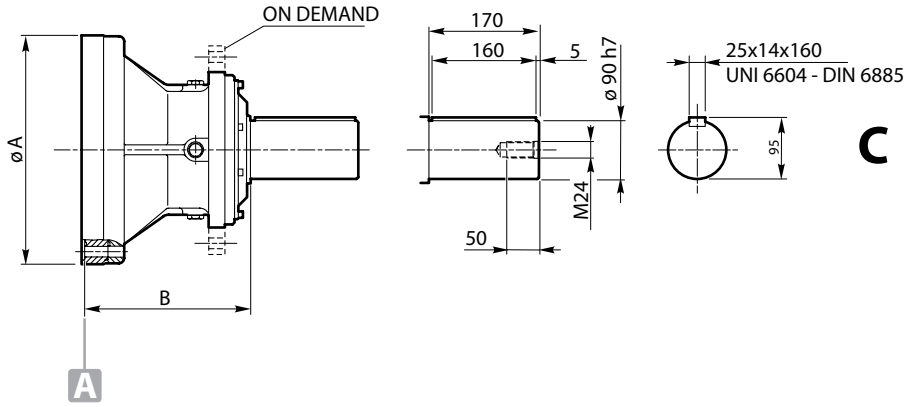

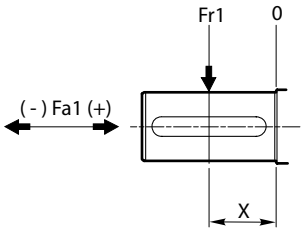

	n1 x h = 1 500 000 Fa1 max (Fr1 = 0)	
	Fa1 (+)	Fa1 (-)
AV1520T	26 000	8 500

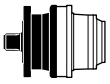

	A	B
RE 1521-2001-6002-6002L	353	252
GB 21003-45004-53004-61004-130005	353	252
RE 6001	490	321
GB 21002-53003-61003-150004	490	321

AV2520H-HL

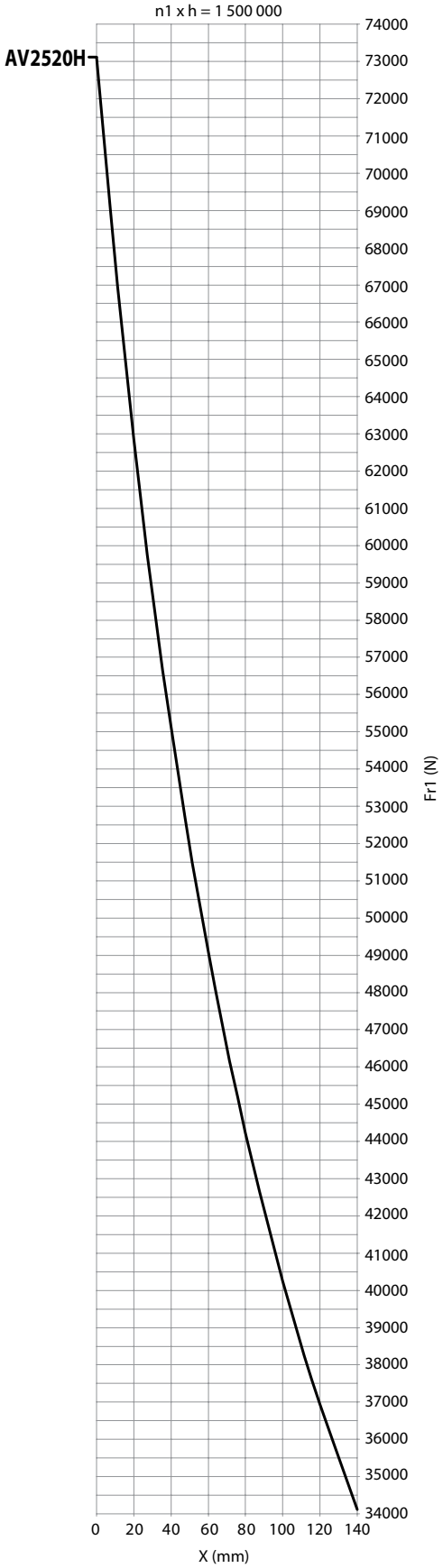

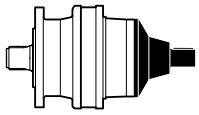

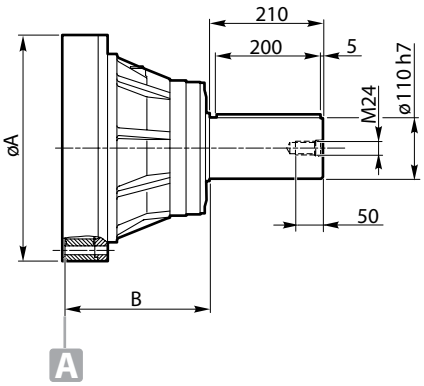

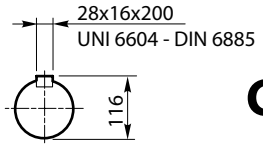

	n1 x h = 1 500 000 Fa1 max (Fr1 = 0)	
	Fa1 (+)	Fa1 (-)
AV2520H	66 000	50 000
AV2520HL	29 700	29 700

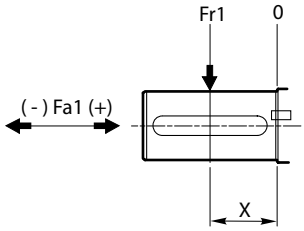

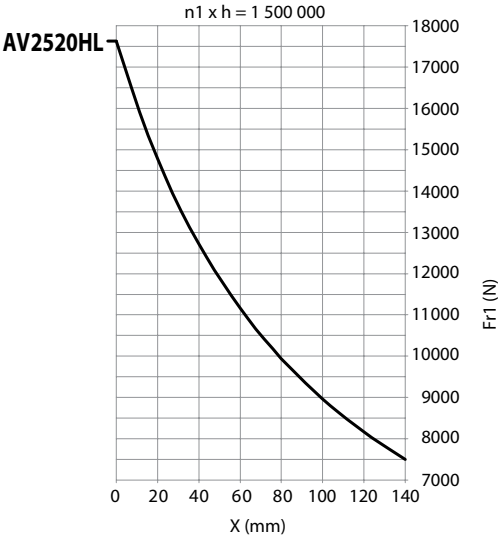

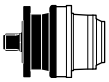

	A	B
RE 2521-3001-8002-8002L	409	257
GB 12012-12012L--26003-31003-40003 GB 85004-110004-205005-235005	409	257
RE 3511-4801	452	320
GB 16002-16002L-45003-130004	452	320
RE 6001	490	293
GB 21002-53003-61003-150004	490	293
RE 8001	490	385
GB 26002-85003	490	385
GB 12011-16001-31002-40002-45002-110003 GB 130003-205004-235004	368	610

AV80

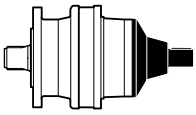

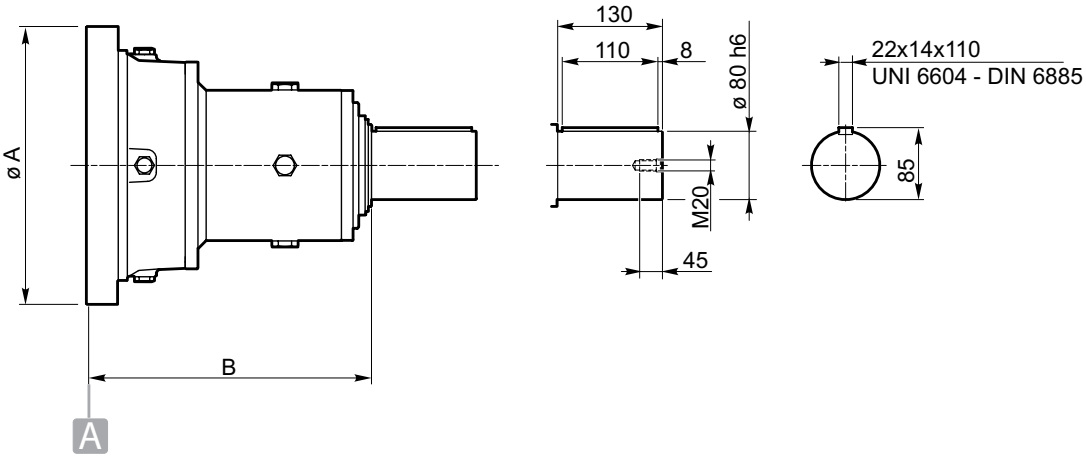

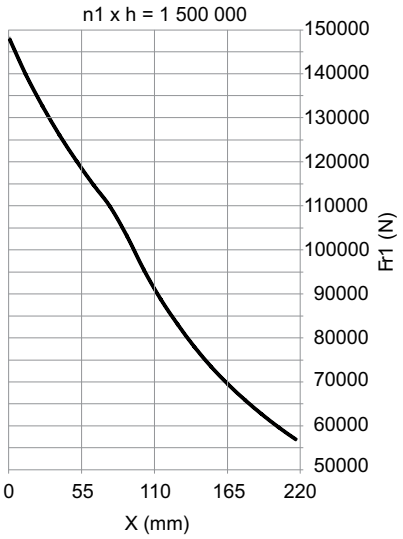

	n1 x h = 1 500 000 Fa1 max (Fr1 = 0)	
	Fa1 (+)	Fa1 (-)
AV80	31 700	31 700

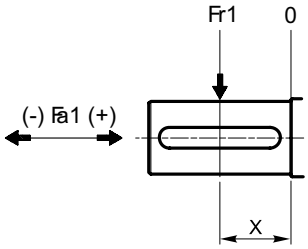

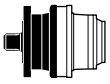

	A	B
RE 811-1021-2522-3002-3512-80003-8003L	295	187.5
GB 12013-12013L-16003L-260004-31004-40004-85005-110005	295	187.5
RE 2521-3001-8002-8002L	409	298
GB 12012-12012L-26003-31003-40003-85004-110004-205003	409	298

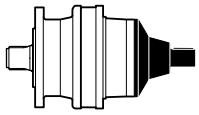

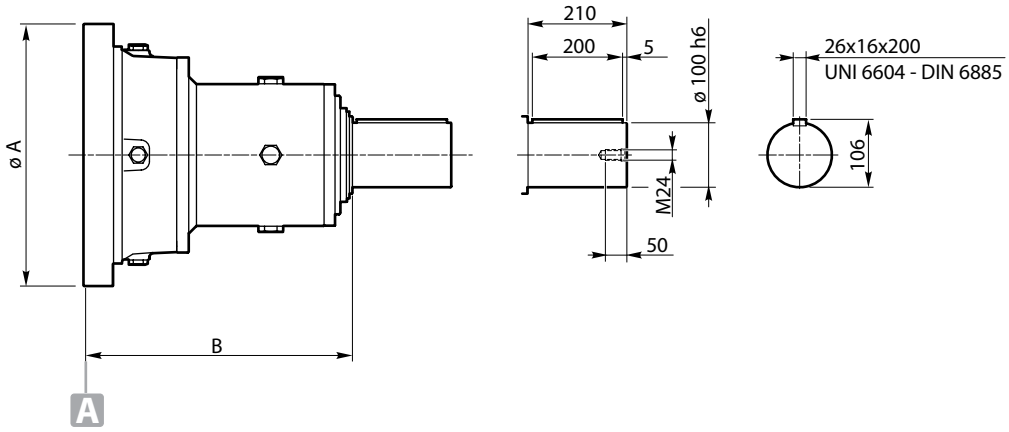

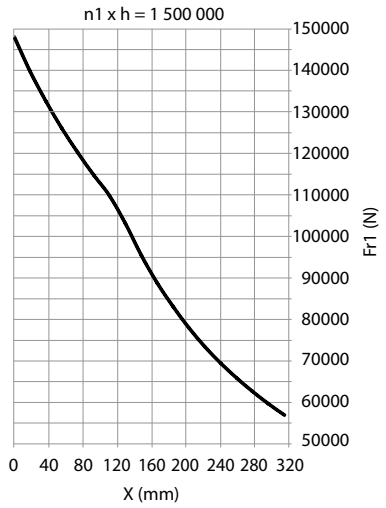

	n1 x h = 1 500 000 Fa1 max (Fr1 = 0)	
	Fa1 (+)	Fa1 (-)
AV100	52 000	-

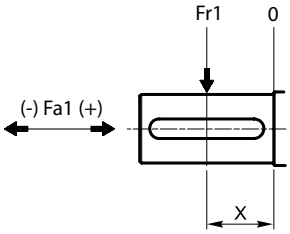

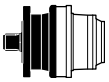

	A	B
RE 3511-4801	452	464.5
GB 16002-45003-130004	452	464.5
RE 6001-8001	490	437
GB 21002-26002-53003-61003-85003-150004	490	437
GB 12011-16001	610	550
GB 31002-40002-45002-110003-130003-150003-205004-235004	610	550

AV150

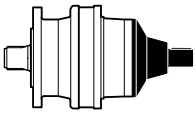

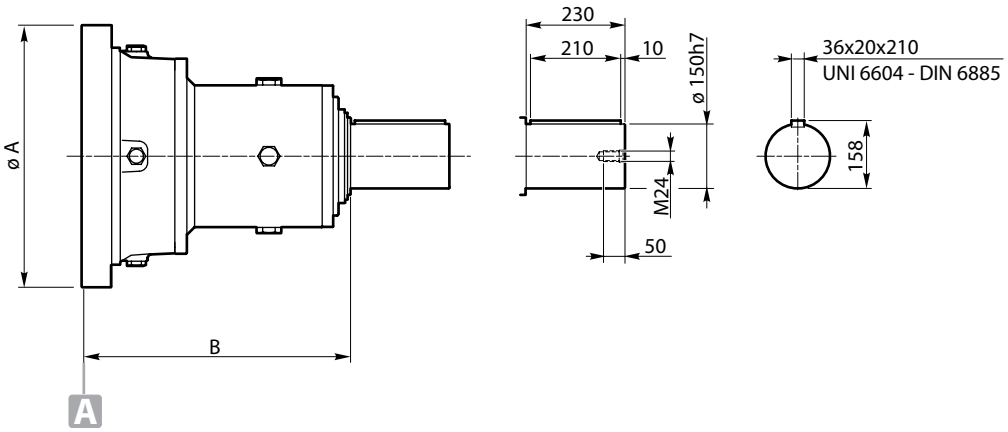

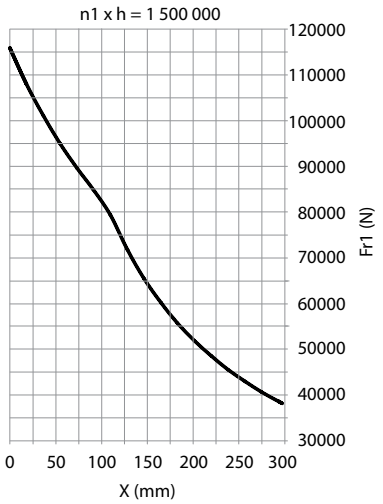

	n1 x h = 1 500 000 Fa1 max (Fr1 = 0)	
	Fa1 (+)	Fa1 (-)
AV150	63 000	-

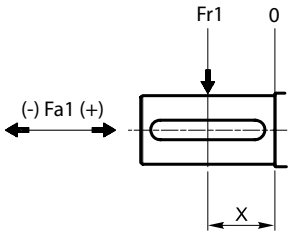

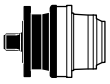

	A	B
RE 6001-8001	490	634
GB 21002-26002-53003-61003-150004	490	634
GB 12011-16001	610	626
GB 31002-40002-45002-110003-130003-15000-205004-235004	610	626

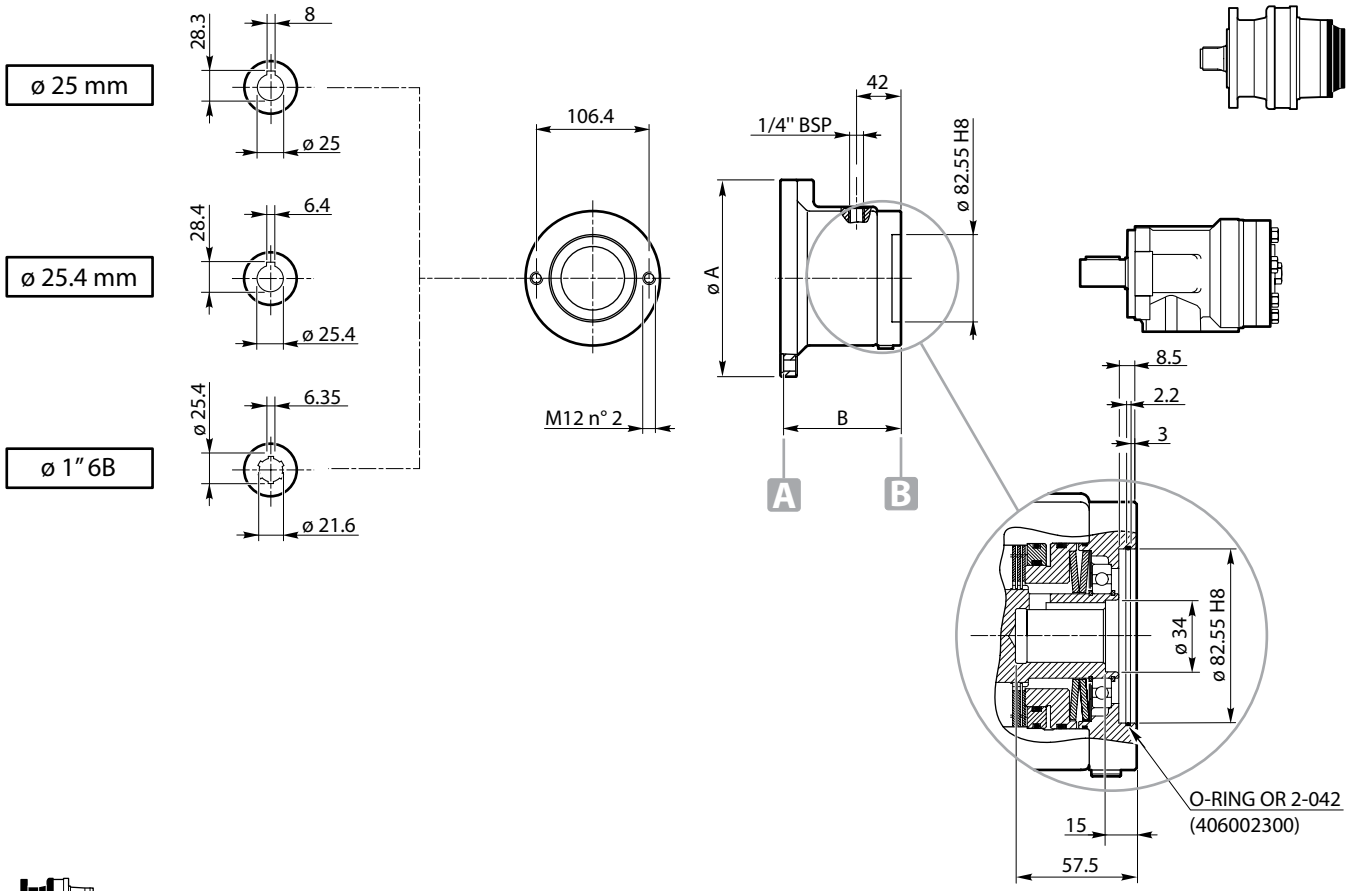

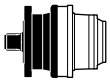

	ø A	B		F 01	F 10	F 11	F 12	F 13	F 14	F 05	F 16	
RE 111 - 112 - 113 - 114 **RE 211 - 212 - 213 - 214** **RE 241 - 242 - 243 - 244** **RE 312 - 313 - 314** **RE 512 - 513 - 514** **RE 613 - 614** **RE 813 - 814** **RE 1023 - 1024** **RE 1523 - 1524** **RE 2004** **RE 2524** **RE 3004** **RE 3514-4804** **RE 6004L** **RE 8005 - 8005L** **GB 12015 - 12015L** **GB 16005 - 16005L** **CC30-CC120**	186	109.5	**Tb** (Nm)	132	133	182	235	332	468	530	608	±5%
			pb (bar)	23	29	34	26	30	36	39	42	
			p max (bar)	300								
			n1 max (RPM)	700								

	ø A	B		F 02	F 20	F 21	F 22	F 23	F 24	F 25	F 26	
RE 311-511 **RE 611 - 612** **RE 812-1022** **RE 1522-2003** **RE 2523-3003** **RE 3513-4803** **RE 6003 - 6003L** **RE 6004 - 6004L** **RE 8004 - 8004L** **GB 12014 - 12014L** **GB 16004 - 16004L** **GB 21004 - 21005** **GB 26005-31005** **GB 40005-45005** **GB 53005** **CC350**	244	118.5	**Tb** (Nm)	132	133	182	235	332	468	530	608	±5%
			pb (bar)	23	29	34	26	30	36	39	42	
			p max (bar)	300								
			n1 max (RPM)	700								

F5-F6

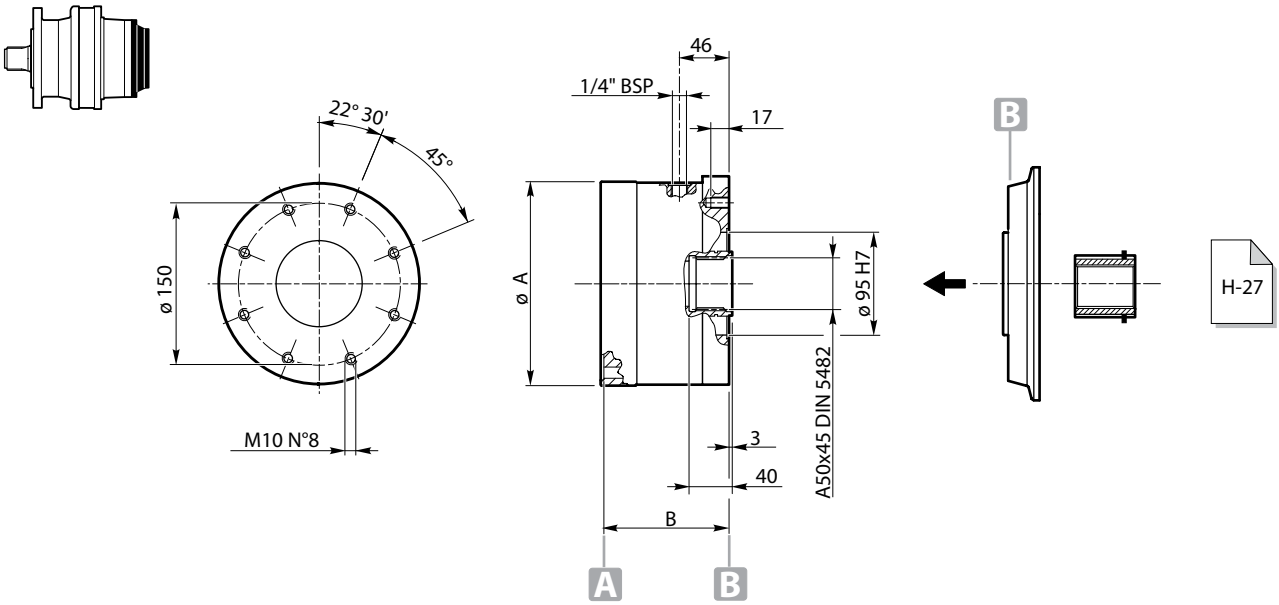

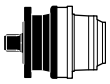

	ø A	B		F 501	F 502	F 503	F504	F505	F506	F 508	
RE 111 - 112 - 113 - 114 **RE 211 - 212 - 213 - 214** **RE 241 - 242 - 243 - 244** **RE 312 - 313 - 314** **RE 512 - 513 - 514** **RE 613 - 614** **RE 813 - 814** **RE 1023 - 1024** **RE 1523 - 1524** **RE 2004** **RE 2524** **RE 3004** **RE 3514-4804** **RE 6004L** **RE 8005 - 8005L** **GB 12015 - 12015L** **GB 16005 - 16005L** **CC30** **CC120**	186	115	**Tb (Nm)**	110	215	325	405	500	630	818	±5%
			pb (bar)	10	20	30	38	28	35	33	
			p max (bar)	300							
			n1 max (RPM)	1500 (standard)							
				3500 (special)							

	ø A	B		F 601	F 602	F 603	F604	F 605	F 606	F608	F610	F612	
RE 311-511 **RE 611 - 612** **RE 812-1022** **RE 1522-2003** **RE 2523-3003** **RE 3513-4803** **RE 6003 - 6003L** **RE 6004 - 6004L** **RE 8004 - 8004L** **GB 12014 - 12014L** **GB 16004 - 16004L** **GB 21004 - 21005** **GB 26005-31005** **GB 40005-45005** **GB 53005** **CC350**	244	125	**Tb (Nm)**	110	215	325	405	500	630	818	1005	1150	±5%
			pb (bar)	10	20	30	38	28	35	33	40	40	
			p max (bar)	300									
			n1 max (RPM)	1500 (standard)									
				3500 (special)									

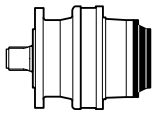

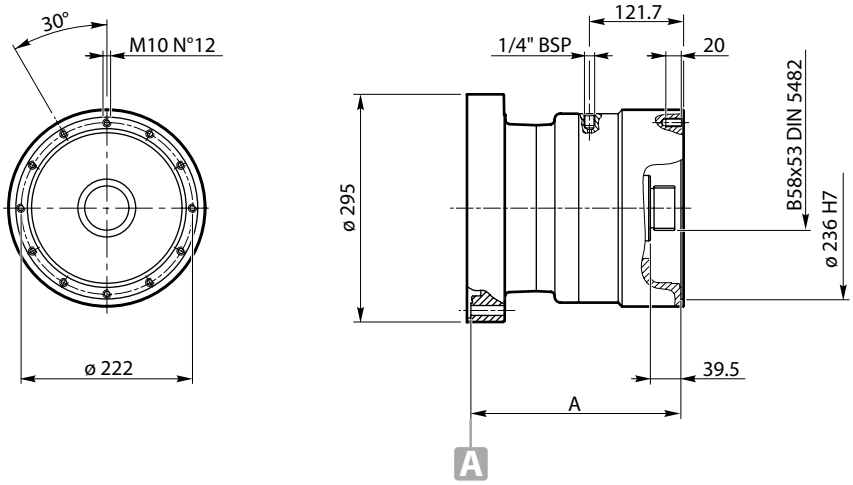

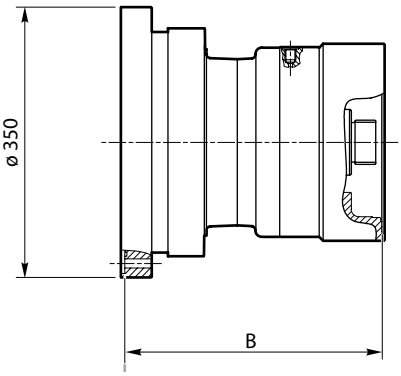

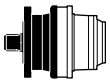

	A	B		F 813	F 815	F 818	F 820	F 823	F 827	F 830	
RE 811	272.5	-	**Tb** (Nm)	1271	1525	1780	2034	2288	2670	3051	±5%
RE 1021	272.5	-									
RE 1521-2001	-	314.5									
RE 2522-3002	272.5	-									
RE 3512-4801	272.5	-									
RE 6002-6002L	-	314.5									
RE 8003-8003L	272.5	-	**pb** (bar)	54	65	76	58	65	76	87	
GB 12013-12013L	272.5	-									
GB 16003L	272.5	-									
GB 16003	-	314.5									
GB 21003	-	314.5									
GB 26004	272.5	-									
GB 31004	272.5	-									
GB 40004	272.5	-	**p max** (bar)	300							
GB 45004	-	314.5									
GB 53004	-	314.5									
GB 61004	-	314.5									
GB 85005	272.5	-									
GB 110005	272.5	-									
GB 130005	-	314.5	**n1 max** (RPM)	1500 (standard)							
GB 150005	-	314.5									
CC600	272.5	-									
CC1000	272.5	-		3500 (special)							
	292.5	-									
	292.5	-									

F8-MU

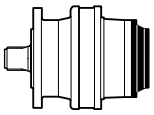

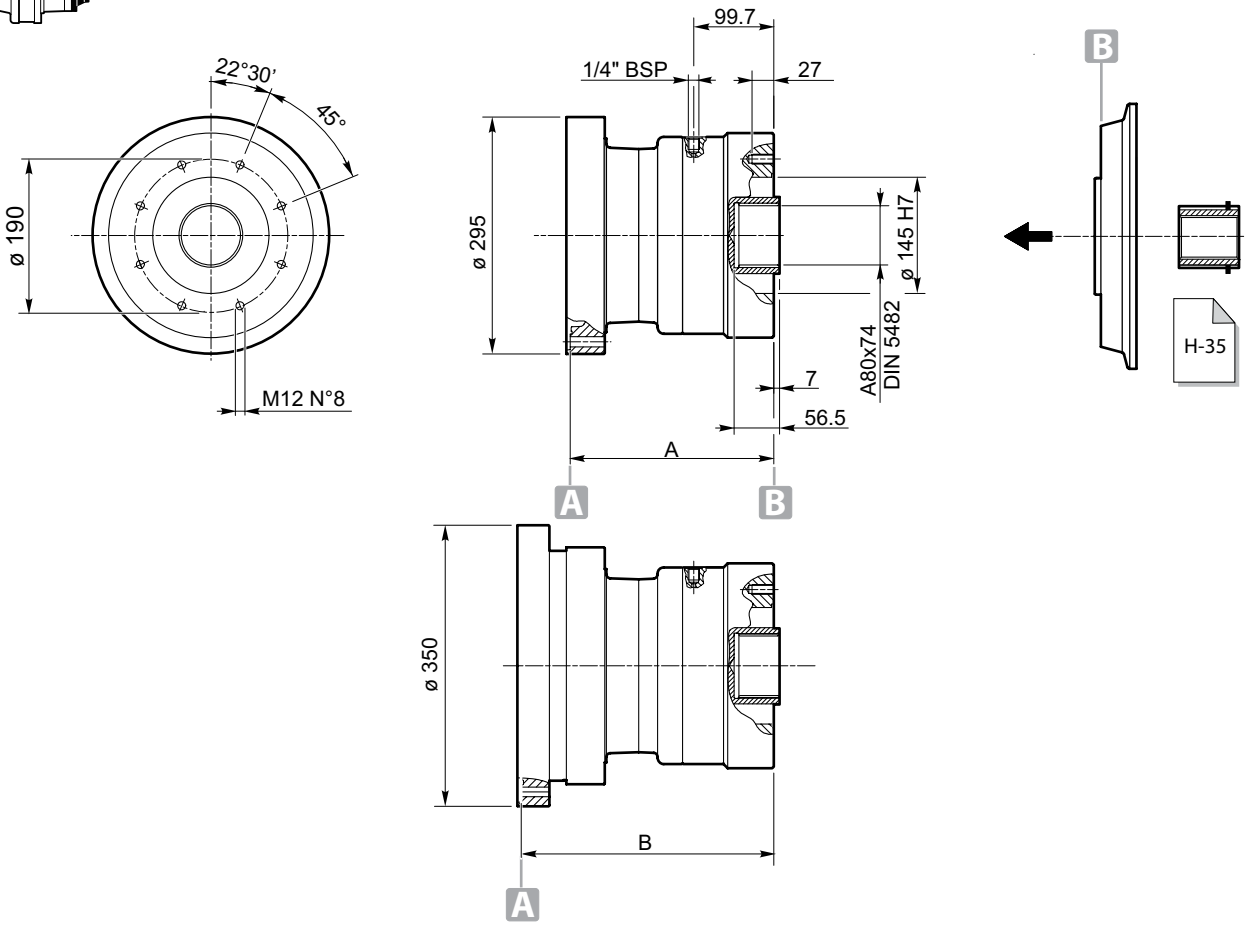

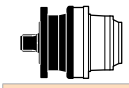

	A	B
RE 811	253.5	-
RE 1021	253.5	-
RE 1521-2001	-	314.5
RE 2522-3002	253.5	-
RE 3512-4801	253.5	-
RE 6002-6002L	-	314.5
RE 8003-8003L	253.5	-
GB 12013-12013L	253.5	-
GB 16003L	253.5	-
GB 16003	-	314.5
GB 21003	-	314.5
GB 26004	253.5	-
GB 31004	253.5	-
GB 40004	253.5	-
GB 45004	-	314.5
GB 53004	-	314.5
GB 61004	-	314.5
GB 85005	253.5	-
GB 110005	253.5	-
GB 130005	-	314.5
GB 150005	-	314.5
CC600	253.5	-
CC1000	253.5	-
	253.5	-

	F 813	F 815	F 818	F 820	F 823	F 827	F 830	
Tb (Nm)	1271	1525	1780	2034	2288	2670	3051	±5%
pb (bar)	54	65	76	58	65	76	87	
p max (bar)	300							
n1 max (RPM)	1500 (standard)							
	3500 (special)							

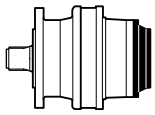

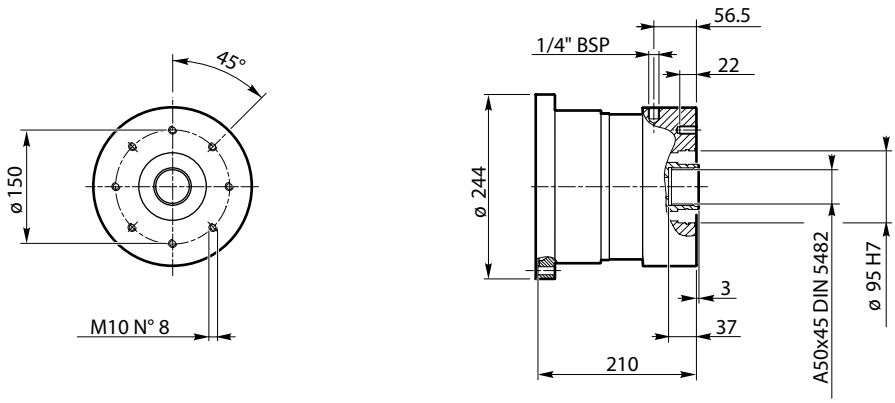

ST

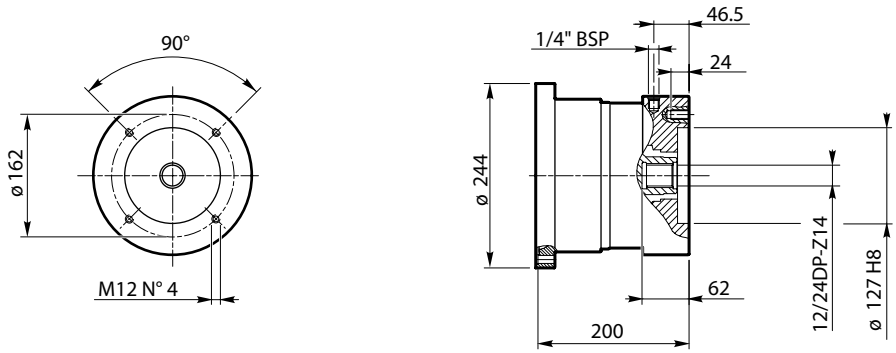

SAE "C"

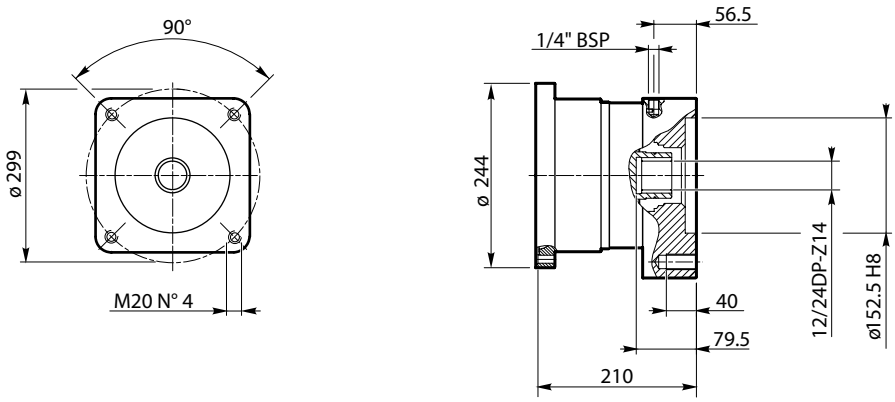

SAE "D"

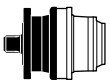

		F 902	F 903	F 904	F 905	F 906	F 908	F 910	F 912	F 915	
RE 311-511 RE 611 - 612 RE 812-1022 RE 1522-2003 RE 2523-3003 RE 3513-4803 RE 6003 - 6003L RE 6004 - 6004L RE 8004 - 8004L GB 12014 - 12014L GB 16004 - 16004L GB 21004 - 21005 GB 26005-31005 GB 40005-45005 GB 53005 CC350	**Tb** (Nm)	244	317	439	488	683	854	976	1120	1465	±5%
	pb (bar)	16	21	20	16	23	23	26	32	39	
	p max (bar)	300									
	n1 max (RPM)	1500 (standard)									
		3500 (special)									

Upon request, brakes up to size F912 can be equipped with freewheeling clutch.

MD

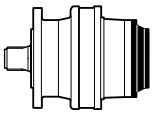

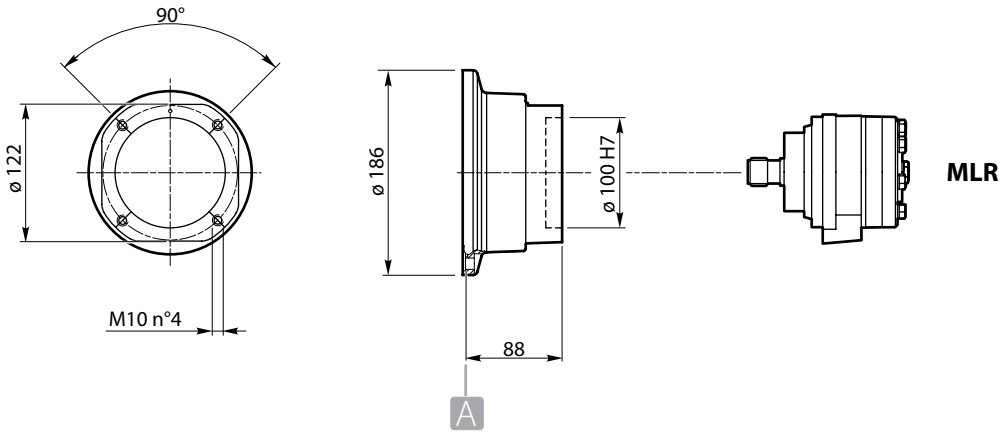

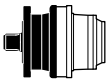

		20	30	40	45	
RE 111 - 112 - 113 - 114 **RE 211 - 212 - 213 - 214** **RE 241 - 242 - 243 - 244** **RE 312 - 313 - 314** **RE 512 - 513 - 514** **RE 613 - 614** **RE 813 - 814** **RE 1023 - 1024** **RE 1523 - 1524** **RE 2004** **RE 2524** **RE 3004** **RE 3514-4804** **RE 6004L** **RE 8005 - 8005L** **GB 12015 - 12015L** **GB 16005 - 16005L**	**Tb** **(Nm)**	220	308	396	459	+5%
	pb **(bar)**	24	24	24	26	
	p max **(bar)**	150				
	n1 max **(RPM)**	700				

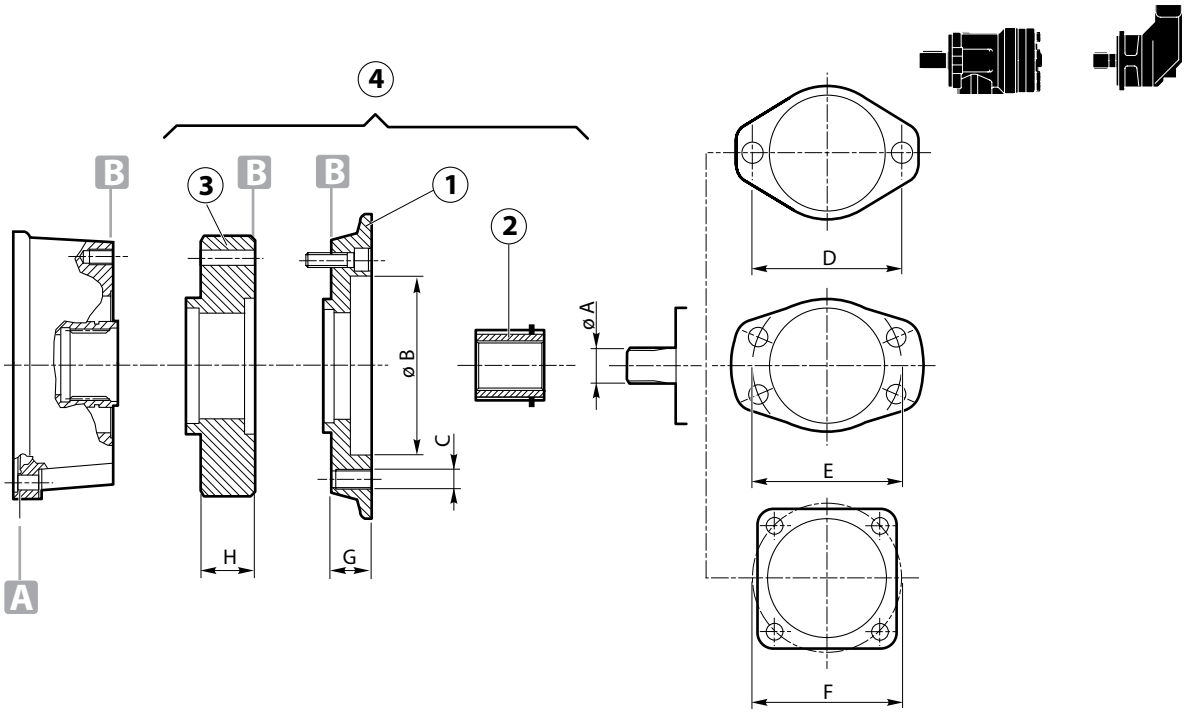

AXIAL PUMP	øA	øB	øC	øD	E	F	G	H	1	2	3	4
M1 15-21	ø 19	82.55	M12	106.4	—	—	26	—	20300047	40000659	—	AQ
M2 24-50	16/32-13	101.6	M14	146	—	—	20	—	40000635	40000657	—	AZ
M2 24-50	16/32-15	101.6	M14	146	—	—	20	—	40000635	40000671	—	BB
M3 40-65	16/32-13	101.6	M14	146	—	—	20	—	40000635	40000657	—	AZ
M3 40-65	16/32-15	101.6	M14	146	—	—	20	—	40000635	40000671	—	BB

DANFOSS	øA	øB	øC	øD	E	F	G	H	1	2	3	4
OMM	ø 16	63	M8	80	—	—	14	—	40000698	40000694	—	CE
OMP 25-400	ø 25	82.55	M12	106.4	—	—	26	—	20300047	40000649	—	AN
OMP 25-400	ø 25.4	82.55	M12	106.4	—	—	26	—	20300047	40000645	—	AI
OMP 25-400	1" B6	82.55	M12	106.4	—	—	26	—	20300047	40000648	—	AM
OMP 25-400	ø 32	82.55	M12	106.4	—	—	38	—	2511001	40000665	—	AD
OMR 50-375	ø 25	82.55	M12	106.4	—	—	26	—	20300047	40000649	—	AN
OMR 50-375	ø 25.4	82.55	M12	106.4	—	—	26	—	20300047	40000645	—	AI
OMR 50-375	1" B6	82.55	M12	106.4	—	—	26	—	20300047	40000648	—	AM
OMR 50-375	ø 32	82.55	M12	106.4	—	—	38	—	02511001	40000665	—	AD
OMH 200-500	ø 32	82.55	M12	106.4	—	—	38	—	02511001	40000665	—	AD
OMH 200-500	12/24-14	82.55	M12	106.4	—	—	38	—	02511001	40000672	—	AE
OMS 80-400	ø 31.75	82.55	M12	1064	—	—	38	—	02511001	40000664	—	UL
OMS 80-400	ø 32	82.55	M12	106.4	—	—	38	—	02511001	40000665	—	AD
OMS 80-400	12/24-14	82.55	M12	106.4	—	—	38	—	02511001	40000672	—	AE
OMS 80-400 SPEC.	12/24-14	82.55	M10	106.4			30		40000681	40000672		CV
OMSS 80-400	12/24-12	100	M10	—	—	125	21	—	02511017	02241030	—	TR
OMTS 160-500	12/24-16	125	M12	160			42		02511081	02241082		UR
OMT 160-500	12/24-17	125	M12	—	—	160	86	—	40001833	40000674	—	CI
OMT 160-500	ø 40	125	M12	—	—	160	78	—	02511041	02241051	—	TW
OMT 160-500(US)	12/24-17	127	M12			150	79.5		02511166	40000674		DF
OMV 315-800	Ø50	160	M16			200	140		02511006	02591003		VM
OMVS 315-800	10/20-16	125	M12	—	—	160	42	—	02511085	02241086	—	US
MTM	12/24-17	127	M12	—	—	162	29	38	02511108	40000674	02731111	UY

EATON (CHAR-LYNN)	øA	øB	øC	øD	E	F	G	H	1	2	3	4
SERIE 2000	ø 25	82.55	M12	106.4	—	—	26	—	20300047	40000649	—	AN
SERIE 2000	Ø25	82.55	M12		106.4		26		40000680	40000649		BN
SERIE 2000	ø 25.4	82.55	M12	106.4	—	—	26	—	20300047	40000645	—	AI
SERIE 2000	ø 31.75	82.55	M12	106.4	—	—	26	—	20300047	40000664	—	AR
SERIE 2000	ø 32	82.55	M12	106.4	—	—	38	—	2511001	40000665	—	AD
SERIE 2000	1"6B	82.55	M12	106,4	—	—	26	—	20300047	40000648	—	AM
SERIE 2000	12/24-14	82.55	M12	106.4	—	—	26	—	20300047	40000672	—	AU
SERIE 4000	12/24-14	101.6	M12			127	20		40000635	40000672		EH
SERIE 4000	12/24-17	127	M12	—	—	162	29	—	02511108	40000674	—	BH
SERIE 6000	12/24-17	127	M12	—	—	162	29	14	02511108	02971179	02731096	CQ
SERIE 6000	ø 40	127	M12	—	—	162	29	38	02511108	02241057	02731111	TV
SERIE 6000	8.5/17	127	M12	—	—	162	29	38	02511108	02241076	02731111	UH

HP HYDRAULIC	øA	øB	øC	øD	E	F	G	H	1	2	3	4
M4PV21-28	ø 25.4	101.6	M14	146	—	—	20	—	40000635	40000645	—	AV
M4PV21-28	16/32-13	101.6	M14	146	—	—	20	—	40000635	40000657	—	AZ
M4PV21-28	16/32-15	101.6	M14	146	—	—	20	—	40000635	40000671	—	BB
M4MF 21-28	ø 25.4	82.55	M12	106.4	—	—	26	—	20300047	40000645	—	AI
M4MF 21-28	16/32- 1 3	82.55	M12	106.4	—	—	26	—	20300047	40000657	—	AP
M4MF 21-28	16/32-15	82.55	M12	106.4	—	—	26	—	20300047	40000671	—	AT
M4PV 34-65	ø 25.4	101.6	M14	146	—	—	20	—	40000635	40000645	—	AV
M4PV 34-65	16/32-13	101.6	M14	146	—	—	20	—	40000635	40000657	—	AZ
M4PV 34-65	16/32-15	101.6	M14	146	—	—	20	—	40000635	40000671	—	BB
M4MF 34-65	ø 25.4	101.6	M14	146	—	—	20	—	40000635	40000645	—	AV
M4MF 34-65	16/32-13	101.6	M14	146	—	—	20	—	40000635	40000657	—	AZ
M4MF 34-65	16/32-15	101.6	M14	146	—	—	20	—	40000635	40000671	—	BB
M4MV 34-65	ø 25.4	101.6	M14	146	—	—	20	—	40000635	40000645	—	AV
M4MV 34-65	16/32-13	101.6	M14	146	—	—	20	—	40000635	40000657	—	AZ
M4MV 34-65	16/32-15	101.6	M14	146	—	—	20	—	40000635	40000671	—	BB

LINDE	øA	øB	øC	øD	E	F	G	H	1	2	3	4
HMF 35	16/32-15	101.6	M14	146	—	—	20	—	40000635	40000671	—	BB
HMF 50-75	16/32-21	127	M16	181	—	—	34	—	02511108	40000654	—	CF
HMF 105	16/32-23	127	M16	181	—	—	34	—	40001811	40000686	—	CH
HMF 135	16/32-27	152.4	M20	228.5	—	—	35	—	40001844	02241123	—	CZ
HMR 135	16/32-27	152.4	M20	228.5	—	—	35	—	40001844	02241123	—	CZ
BPV 70	W35x2	127	M12	162	—	—	25	—	02511108	40000670	—	VK

M + S	øA	øB	øC	øD	E	F	G	H	1	2	3	4
EPMM 8-50	ø 14	63	M8	80	—	—	14	—	40000698	40000658	—	CD
EPM M 8-50	ø 16	63	M8	80	—	—	14	—	40000698	40000694	—	CE
EPM 40-630	ø 25	82.55	M12	106.4	—	—	26	—	20300047	40000649	—	AN
EPM 40-630	ø 25.4	82.55	M12	106.4	—	—	26	—	20300047	40000645	—	AI
EPM 40-630	1" 6B	82.55	M12	106.4	—	—	26	—	20300047	40000648	—	AM
EPM 40-630	25/22-14	82.55	M12	106.4	—	—	26	—	20300047	40000647	—	AL
EPM 40-630	12/24-14	82.55	M12	106.4	—	—	38	—	2511001	40000672	—	AE
EPM 40-630	ø 32	82.55	M12	106.4	—	—	38	—	2511001	40000665	—	AD
EPRM 50-400	ø 25	82.55	M12	106.4	—	—	26	—	20300047	40000649	—	AN
EPRM 50-400	ø 25.4	82.55	M12	106.4	—	—	26	—	20300047	40000645	—	AI
EPRM 50-400	1" 6B	82.55	M12	106.4	—	—	26	—	20300047	40000648	—	AM
EPRM 50-400	25/22-14	82.55	M12	106.4	—	—	26	—	20300047	40000647	—	AL
EPRM 50-400	12/24-14	82.55	M12	106.4	—	—	38	—	2511001	40000672	—	AE
EPRM 50-400	ø 32	82.55	M12	106.4	—	—	38	—	2511001	40000665	—	AD
EPMS 80-400	ø 31.75	82.55	M12	106.4	—	—	38	—	2511001	40000664	—	AG
EPMS 80-400	ø 32	82.55	M12	106.4	—	—	38	—	2511001	40000665	—	AD
EPMS 80-400	12/24-17	82.55	M12	106.4	—	—	38	—	2511001	40000674	—	AF
EPMT 160-500	12/24-17	125	M12	—	—	160	86	—	40001833	40000674	—	CI
MTS 250	12/24-16	125	M12	160			42		02511081	02241082		UR

REXROTH	øA	øB	øC	øD	E	F	G	H	1	2	3	4
A2FE 45	W30x2	160	M16	200			107.5		02511250	40000669		ER
A2FE 56	W30x2	160	M16	200			107.5		02511250	40000669		ER
A2FE 80	W35x3	190	M20	224			133		02511281	40000670		ES
A2FM 10-16	ø 25	80	M8	—	—	100	36.5	—	40001842	40000649	—	CL
A2FM 10-16	W25x1.25	80	M8	—	—	100	36.5	—	40001842	40000668	—	CM
A2FM 23-32	ø 25	100	M10	—	—	125	48	—	40000682	40000649	—	BS
A2FM 23-32	W25X1.25	100	M10	—	—	125	48	—	40000682	40000668	—	BT
A2FM 23-32	W30x2	100	M10	—	—	125	48	—	40000682	40000669	—	BU
A2FM 45-63	W30x2	125	M12	—	—	160	44	—	40000684	40000669	—	CA
A2FM 45-63	W35x2	125	M12	—	—	160	44	—	40000684	40000670	—	CB
A2FM 80-90	W35x2	140	M12	—	—	180	53	—	40001852	40000670	—	CN
A2FM 80-90	W40x2	140	M12	—	—	180	53	—	40001852	40001858	—	CP
A2FM 107	W40x2	160	M16	—	—	200	56.5	—	02511039	40001858	—	TP
A2FM 125	W40x2	160	M16	—	—	200	56.5	—	02511039	40001858	—	TP
A2FM 160	W50x2	180	M16	—	—	224	62	—	02511109	02591102	—	CT
A2FM 200	W50x2	200	M20	—	—	250	73	—	02511232	02591102	—	DB
A4FM 22-28	16/32-13	101.6	M14	146	—	—	20	—	40000635	40000657	—	AZ
A4FM 22-28	16/32-15	101.6	M14	146	—	—	20	—	40000635	40000671	—	BB
A4FM 40	W30x2	101.6	M14	146	—	—	20	—	40000635	40000669	—	BA
A4FM 56	W30x2	127	M16	181	—	—	34	—	40001811	40000669	—	CG
A10FM 23-28	16/32-13	101.6	M14	146	—	—	20	—	40000635	40000657	—	AZ
A10FM 37-45	16/32-15	101.6	M14	146	—	—	20	—	40000635	40000671	—	BB
A6VM 28	W25x1.25	100	M10	—	—	125	48	—	40000682	40000668	—	BT
A6VM 28	W30x2	100	M10	—	—	125	48	—	40000682	40000669	—	BU
A6VM 55	W30x2	125	M12	—	—	160	44	—	40000684	40000669	—	CA
A6VM 55	W35x2	125	M12	—	—	160	44	—	40000684	40000670	—	CB
A6VM 80	W35x2	140	M12	—	—	180	53	—	40001818	40000670	—	CN
A6VM 80	W40x2	140	M12	—	—	180	53	—	40001818	40001858	—	CP
A6VM 107	W45x2	160	M16	—	—	200	56.5	—	02511039	02591073	—	VN
A6VM 140	W45x2	180	M16	—	—	224	62	—	02511109	02591073	—	VQ
A6VM 160	W45x2	180	M16	—	—	224	62	—	02511109	02591073	—	VQ
A6VM 160	W50x2	180	M16	—	—	224	62	—	02511109	02591102	—	CT
A6VM 250	W50x2	200	M20	—	—	250	73	—	02511232	02591102	—	DB
AA6VM 55, 80	12/24-12	127	M14	—	—	162	29	—	02511108	40000672	—	BG
AA6VM 107, 160	8/16-13	152.4	M20	—	—	228.5	41	—	40001844	02241043	—	UX
AA2FM 10, 12, 16	16/32-13	101.6	M14	146	—	—	20	—	40000635	40000657	—	AZ
AA2FM 23, 28, 32	12/24-12	127	M14	—	—	—	29	—	02511108	40000672	—	BG
AA2FM 45, 56 ,63	12/24-12	127	M14	—	—	162	29	—	02511108	40000672	—	BG
AA2FM 80, 90	12/24-12	127	M14	—	—	162	29	—	02511108	40000672	—	BG
AA2FM 56 ,63	16/32-21	127	M14	—	—	162	29	—	02511108	40000654	—	BD
AA2FM 80, 90	16/32-21	127	M14	—	—	162	29	—	02511108	40000654	—	BD
AA2FM 107, 125	8/16-13	152.4	M20	—	—	228.5	41	—	40001844	02241043	—	UX
AA2FM 160, 180	8/16-13	152.4	M20	—	—	228.5	41	—	40001844	02241043	—	UX

SAE STANDARD	øA	øB	øC	øD	E	F	G	H	1	2	3	4
SAE A	ø 25	82.55	M12	106.4	—	—	26	—	20300047	40000649	—	—
	ø 25.4	82.55	M12	106.4	—	—	26	—	20300047	40000645	—	—
	ø 31.75	82.55	M12	106.4	—	—	26	—	20300047	40000664	—	—
	ø 32	82.55	M12	106.4	—	—	26	—	20300047	40000665	—	—
	1"6B	82.55	M12	106.4	—	—	26	—	20300047	40000648	—	—
	12/24-14	82.55	M12	106.4	—	—	26	—	20300047	40000672	—	—
SAE B	ø 25	101.6	M14	146	—	—	20	—	40000635	40000649	—	—
	ø 25.4	101.6	M14	148	—	—	20	—	40000635	40000645	—	—
	ø 31.75	101.6	M14	146	—	—	20	—	40000635	40000664	—	—
	ø 32	101.6	M14	146	—	—	20	—	40000635	40000665	—	—
	1" 6B	101.6	M14	146	—	—	20	—	40000635	40000648	—	—
	12/24-14	101.6	M14	146	—	—	20	—	40000635	40000672	—	—

SAE STANDARD	øA	øB	øC	øD	E	F	G	H	1	2	3	4
MAGNETO	ø 25	82.55	M12	—	106.4	—	26	—	40000680	40000649	—	—
	ø 25.4	82.55	M12	—	106.4	—	26	—	40000680	40000645	—	—
	ø 31.75	82.55	M12	—	106.4	—	26	—	40000680	40000664	—	—
	ø 32	82.55	M12	—	106.4	—	26	—	40000680	40000665	—	—
	1" 6B	82.55	M12	—	106.4	—	26	—	40000680	40000648	—	—
	12/24-14	82.55	M12	—	106.4	—	26	—	40000680	40000672	—	—
SAE C	ø 31.75	127	M14	—	—	162	29	—	02511108	40000664	—	—
	12/24-14	127	M14	—	—	162	29	—	02511108	40000672	—	—
	12/24-17	127	M14	—	—	162	29	—	02511108	40000674	—	—

SAMHYDRAULIK	øA	øB	øC	øD	E	F	G	H	1	2	3	4
BGM 13-50	ø16	63	M8	80	—	—	14	—	40000698	40000694	—	CE
BG 40-400	ø25	82.55	M12	106.4	—	—	26	—	20300047	40000649	—	AN
BG 40-400	ø25.4	82.55	M12	106.4	—	—	26	—	20300047	40000645	—	AI
BG 40-400	1" 6B	82.55	M12	106.4	—	—	26	—	20300047	40000648	—	AM
AGF 50-400	ø25	82.55	M12	106.4	—	—	26	—	20300047	40000649	—	AN
ARF 50-400	ø25	82.55	M12	106.4	—	—	26	—	20300047	40000649	—	AN
BR 50-400	ø25	82.55	M12	106.4	—	—	26	—	20300047	40000649	—	AN
BR 50-400	ø25.4	82.55	M12	106.4	—	—	26	—	20300047	40000645	—	AI
BR 50-400	ø31.75	82.55	M12	106.4	—	—	26	—	20300047	40000664	—	AR
BR 50-400	ø 32	82.55	M12	106.4	—	—	38	—	20300047	40000665	—	AS
BR 50-400	1" 6B	82.55	M12	106.4	—	—	26	—	20300047	40000648	—	AM
H1C 12	Ø20	80	M8	—	—	100	36.5	—	02971201	02591008	—	CS
H1C 30	W25x1,25	100	M10	—	—	125	31	—	02511221	40000668	—	DW
H1C 55	12/24-17	127	M14	—	—	162	29	—	40000653	40000672	—	UT
H1C 55	W30x2	125	M12	—	—	160	44	—	40000684	40000669	—	CA
H1C 55	Ø30	125	M12	—	—	160	44	—	40000684	02591040	—	DU
H1C 75	W35x2	140	M12	—	—	180	53	—	40001818	40000670	—	TQ
H1C 90-108	W40x2	160	M16	—	—	200	57	—	02511039	40001858	—	TP
H1C 90-108	Ø40	160	M16	—	—	200	56.5	—	02511039	02241057	—	EF
H1C 160	W45x2	180	M16	—	—	224	62	—	02511109	02591073	—	VQ
HPR 80-400	ø31.75	82.55	M12	106.4	—	—	38	—	02511001	40000664	—	AG
HPR 80-400	ø 32	82.55	M12	106.4	—	—	38	—	02511001	40000665	—	AD
HPR 80-400	12/24-14	82.55	M12	106.4	—	—	38	—	02511001	40000672	—	AE
H2V 55	W30x2	125	M12	—	—	160	44	—	40000684	40000669	—	CA
H2V 160	W45x2	180	M16	—	—	224	62	—	02511109	02591073	—	VQ

SAUER	øA	øB	øC	øD	E	F	G	H	1	2	3	4
SMF2 033-070	16/32-21	127	M12	—	—	162	29	—	02511108	40000654	—	BD
SMF2 089	16/32-23	127	M14	—	—	162	29	—	40000653	40000686	—	BI
M25MF	16/32-13	101.6	M14	146	—	—	20	—	40000635	40000657	—	AZ
M35MF	16/32-13	101.6	M14	146	—	—	20	—	40000635	40000657	—	AZ
M35/M44 MF	16/32-15	101.6	M14	146	—	—	20	—	40000635	40000671	—	BB
M44MF	16/32-13	101.6	M14	146	—	—	20	—	40000635	40000657	—	AZ
M46MF	16/32-13	101.6	M14	146	—	—	20	—	40000635	40000657	—	AZ
51D 80	W40x2	140	M12	—	—	180	53	—	40001818	40001858	—	CP
51D 110	W40x3	160	M16	—	—	200	56.5	—	02511039	40001858	—	TP
51V 080	12/24-14	127	M12	—	—	162	29	—	02511108	40000672	—	BG
51V 080	16/32-23	127	M12	—	—	162	29	—	02511108	40000686	—	BI
51V 110/160A	8/16-13	152.4	M20	—	—	228.5	40	—	02511164	02631152	—	8X
51V 160/A	8/16-13	152.4	M20	—	—	228.5	40	—	40001844	02241043	—	UX
51V 250	16/32-27	161.5	M20	—	—	317.15	35	—	02511147	02241123	—	EJ
90M 030	16/32-13	101.6	M14	146	—	—	20	—	40000635	40000657	—	AZ
90M 030	16/32-15	101.6	M14	146	—	—	20	—	40000635	40000671	—	BB
90M 042	16/32-13	101.6	M14	146	—	—	20	—	40000635	40000657	—	AZ
90M 042	16/32-15	101.6	M14	146	—	—	20	—	40000635	40000671	—	BB
90M 055	16/32-21	127	M12	—	—	162	29	—	02511108	40000654	—	BD
90M 075	16/32-21	127	M12	—	—	162	29	—	02511108	40000654	—	BD
90M 100	16/32-23	127	M12	—	—	162	29	—	02511108	40000686	—	BI
90M 100	8/16-13	127	M12	—	—	162	29	—	02511108	02241013	—	EV
90M 130	8/16-Z13	152.4	M20	—	—	228.5	40	—	40001844	022411043	—	UX

VOAC	øA	øB	øC	øD	E	F	G	H	1	2	3	4
F11-150 SAE	8/16-13	152.4	M20	228.5	—	—	41	—	40001844	02241043	—	UX
F12-30 SAE	ø25.4	101.6	M14	146	—	—	20	—	40000635	40000645	—	AV
F12-30 SAE	16/32-13	101.6	M14	146	—	—	20	—	40000635	40000657	—	AZ
F12-40 SAE	ø31.75	127	M12	—	—	162	29	—	02511108	40000664	—	BF
F12-40 SAE	12/24-14	127	M12	—	—	162	29	—	02511108	40000672	—	BG
F12-60 SAE	ø31.75	127	M12	—	—	162	29	—	02511108	40000664	—	BF
F12-60 SAE	12/24-14	127	M12	—	—	162	29	—	02511108	40000672	—	BG
F12-80 SAE	12/24-17	127	M12	—	—	162	29	—	02511108	40000674	—	BH
V12-60 SAE	12/24-14	127	M12	—	—	162	29	—	02511108	40000672	—	BG
V12-80 SAE	12/24-14	127	M12	—	—	162	29	—	02511108	40000672	—	BG
F12-110 SAE	8/16-13	152.4	M20	228.5	—	—	41	—	40001844	02241043	—	UX
V14-160 ISO	W45x2	180	M16	224	—	—	62	—	02511109	02591073	—	VQ
F12-80 ISO	ø40	140	M12	—	—	180	53	38	40001852	02241057	2731111	UW
TK	12/24-17	127	M12	—	—	162	29	14	02511108	40000674	2731096	CQ
F12-30 ISO	W30x2	100	M10	—	—	125	48	—	40000682	40000669	—	BU
F12-40 MF-HI ISO	W30x2	125	M12	160	—	—	44	—	40000684	40000669	—	CA
F12-60 ISO	W35x2	125	M12	—	—	160	44	—	40000684	40000670	—	CB
F12-80 ISO	W40x2	140	M12	—	—	180	53	—	40001852	40001858	—	CP
F12-110 ISO	W45x2	160	M16	200	—	—	56.5	—	02511039	02591073	—	VN

WHITE	øA	øB	øC	øD	E	F	G	H	1	2	3	4
RS 03-24	ø25	82.55	M12	106.4	—	—	26	—	20300047	40000649	—	AN
RS 03-24	ø25.4	82.55	M12	106.4	—	—	26	—	20300047	40000645	—	AI
RS 03-24	1" 6B	82.55	M12	106.4	—	—	26	—	20300047	40000648	—	AM
HB 03-24	ø25	82.55	M12	106.4	—	—	26	—	20300047	40000649	—	AN
HB 03-24	ø25.4	82.55	M12	106.4	—	—	26	—	20300047	40000645	—	AI
HB 03-24	ø31.75	82.55	M12	106.4	—	—	26	—	20300047	40000664	—	AR
HB 03-24	ø32	82.55	M12	106.4	—	—	26	—	20300047	40000665	—	AS
HB 03-24	1" 6B	82.55	M12	106.4	—	—	26	—	20300047	40000648	—	AM
HB 03-24	12/24-14	82.55	M12	106.4	—	—	26	—	20300047	40000672	—	AU
HB 03-24	16/32-13	82.55	M12	106.4	—	—	26	—	20300047	40000657	—	AP
RE 07-45	ø25	82.55	M12	—	106.4	—	26	—	40000680	40000649	—	BN
RE 07-45	ø25.4	82.55	M12	—	106.4	—	26	—	40000680	40000645	—	BL
RE 07-45	ø31.75	82.55	M12	—	106.4	—	26	—	40000680	40000664	—	BP
RE 07-45	ø32	82.55	M12	—	106.4	—	26	—	40000680	40000665	—	BQ
RE 07-45	1" 6B	82.55	M12	—	106.4	—	26	—	40000680	40000648	—	BM
RE 07-45	12/24-14	82.55	M12	—	106.4	—	26	—	40000680	40000672	—	BR
DR 12-46	ø25	82.55	M12	—	106.4	—	26	—	40000680	40000649	—	BN
DR 12-46	ø25.4	82.55	M12	—	106.4	—	26	—	40000680	40000645	—	BL
DR 12-46	ø31.75	82.55	M12	—	106.4	—	26	—	40000680	40000664	—	BP
DR 12-46	ø32	82.55	M12	—	106.4	—	26	—	40000680	40000665	—	BQ
DR 12-46	1" 6B	82.55	M12	—	106.4	—	26	—	40000680	40000648	—	BM
DR 12-46	12/24-14	82.55	M12	—	106.4	—	26	—	40000680	40000672	—	BR

ST

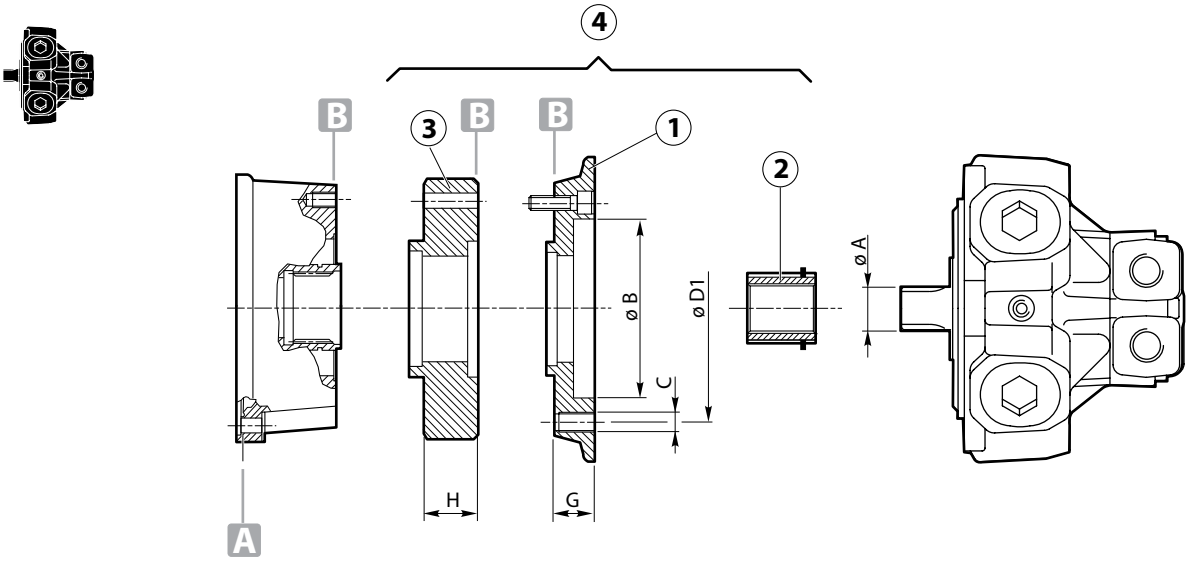

INTERMOT	øA	øB	C	øD1	E	F	G	H	1	2	3	4
G34/A-AA	ø30	82.55	M12	106.4	—	—	10.5	26	02511082	2591040	02511018	UM
G 100	W40x2	125	M8	175	—	—	44	—	02511282	40001858	—	EQ
G 100	A40x36	125	M8	175	—	—	44	—	02511282	40001858	—	ET
IAM 195	6x26x32	172	M10	190	—	—	39.5	—	02511170	40001829	—	DE

SAI	øA	øB	C	øD1	E	F	G	H	1	2	3	4
BD2	W40x2	150	M12	250	—	—	38	—	02511070	02591049	—	UE
BV2	W40x2	150	M12	250	—	—	38	—	02511070	02591049	—	UE
GM05 40-200	28x34x6	125	M10	160	—	—	40	—	02511045	40000646	—	TZ
GM05 40-200	35x2x16	125	M10	160	—	—	40	—	02511045	40000670	—	TT
GM05 40-200	ø30	125	M10	160	—	—	40	—	02511045	02591040	—	TM
GM1 100-320	28x34x6	175	M12	210	—	—	29	—	02971466	40000646	—	VB
GM1 100-320	35x2x16	175	M12	210	—	—	29	—	02971466	40000670	—	TJ
GM2 200-630	40x3x12	150	M12	250	—	—	38	—	02511070	02591044	—	UB
GM2 200-630	36x40	150	M12	250	—	—	38	—	02511070	02591063	—	VA
GM3	W40x3	265	M18	310			43.5		02511151	02591044		DS

CALZONI	øA	øB	øC	øD1	E	F	G	H	1	2	3	4
MR 250-300	42x48x8	175	M10	232	—	—	92	—	02511030	02591016	—	FA

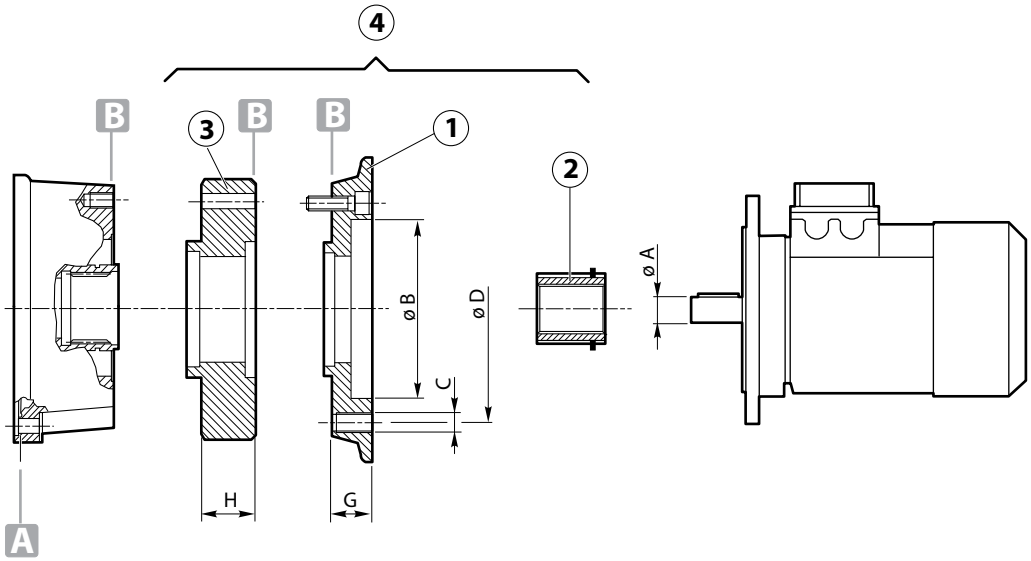

IEC	øA	øB	C	øD	E	F	G	H	1	2	3	4
63 B5	ø11	95	M8	115	—	—	20	—	02511000	02591001	—	TL
71 B5	ø14	110	M8	130	—	—	16	—	40000690	40000658	—	CC
80 B5	ø19	130	M10	165	—	—	16	—	40000683	40000659	—	BV
90 B5	ø24	130	M10	165	—	—	16	—	40000683	40000660	—	BZ
100 B5 ø24	ø24	180	M12	215	—	—	16	—	02511018	40000660	—	UÀ
100/112 B5	ø28	180	M12	215	—	—	24.5	—	02511018	40000661	—	AH
112 B5	ø38	180	M12	215	—	—	24	38	02511018	02241029	02731111	UU
132 B5	ø38	230	M12	265	—	—	49	—	02511016	—	—	AG
132 B14	ø38	130	ø 11	165	—	—	69	—	02511076	—	—	UF
200 B5	ø55	300	M18	350	—	—	130	—	02511067	02241066	—	TX

NEMA	øA	øB	C	øD	E	F	G	H	1	2	3	4
56 H	ø15.88 (0.625)	114.3 (4.500)	Ø10 (0.394)	149.2 (5.874)	—	—	53 (2.087)	—	02511122	02591085	—	VX
143-145 TC	ø22.22 (0.875)	114.3 (4.500)	Ø10 (0.394)	149.2 (5.874)	—	—	53 (2.087)	—	02511122	02591084	—	VZ
182-184 TC	ø28.57 (1.125)	215.9 (8.500)	Ø14 (0.551)	206 (8.110)	—	—	38 (1.496)	—	02511073	02591045	—	UC
213-215 TC	ø34.925 (1.375)	215.9 (8.500)	Ø14 (0.551)	184.5 (7.264)	—	—	55.5 (2.185)	—	02511037	02241048	—	VT
254-256 TC	ø41.275 (1.625)	215.9 (8.500)	Ø14 (0.551)	150 (5.906)	—	—	70 (2.756)	—	02511141	02241131	—	VJ
284-286 TC	ø47.625 (1.875)	266.7 (10.500)	Ø14 (0.551)	228.6 (9.000)	—	—	86 (3.386)	—	02511142	02241132	—	CR

mm (inch)

ST

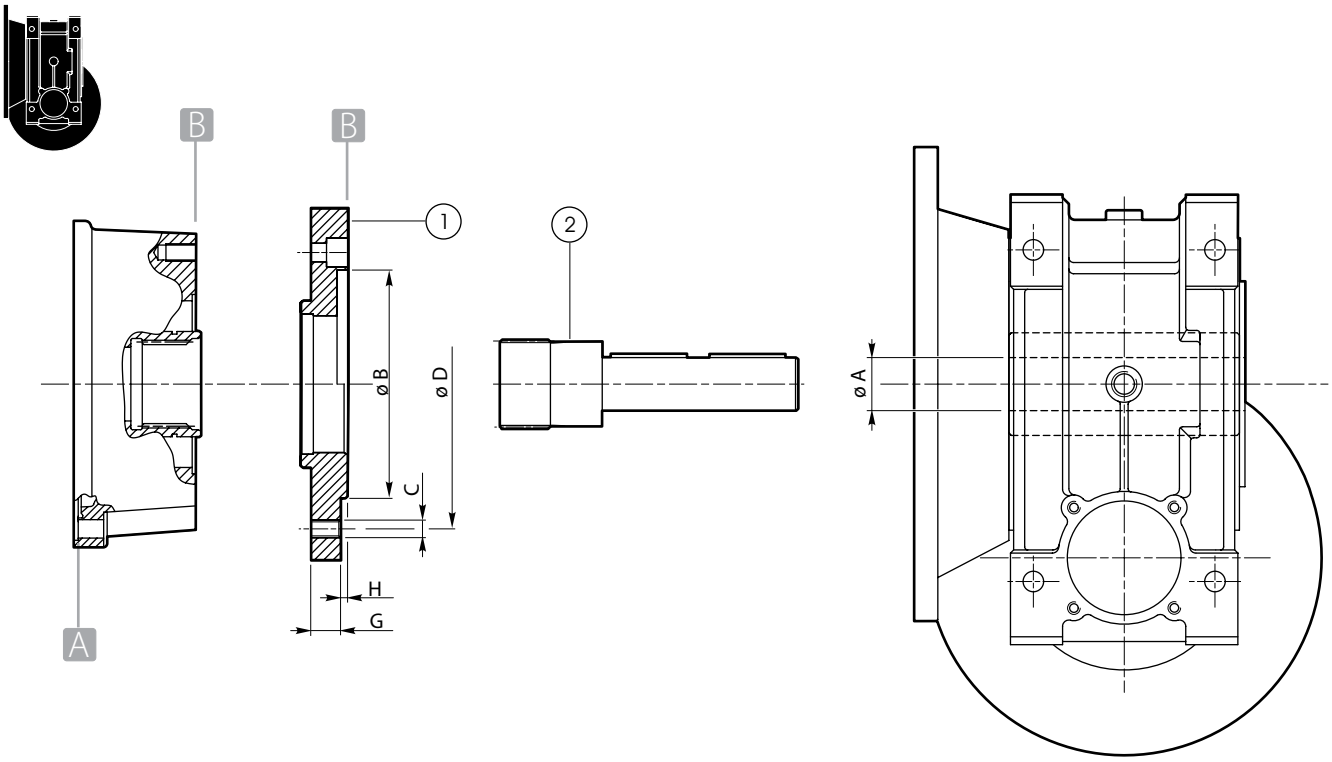

VARVEL	øA	øB	øC	øD	E	F	G	H	1	2	3	4
FRS 50 FL	Ø24	110	M10	130	—	—	16	—	02511022	40000660	—	VR
FRS 60 FL	Ø25	115	M10	150	—	—	16	—	02511095	40000649	—	UZ
FRS 70 FL	Ø28	130	M12	165	—	—	13.5	—	40000644	40000650	—	TI
FRS 85 FL	Ø32	130	M12	165	—	—	13.5	—	40000644	40000655	—	TG
FRS 130 PC	Ø48	180	Ø13	215	—		20	—	40001804	40000652	—	VI

STM	øA	øB	øC	øD	E	F	G	H	1	2	3	4
RMI 50 FL	Ø24	110	M10	130	—	—	16	—	02511022	40000660	—	VR
RMI 60 FL	Ø25	115	M10	150	—	—	16	—	02511095	40000649	—	UZ
RMI 70 FL	Ø28	130	M12	165	—	—	13.5	—	40000644	40000650	—	TI
RMI 85 FL	Ø32	130	M12	165	—	—	13.5	—	40000644	40000655	—	TG
RMI 110 F1	Ø42	130	M10	165	—	—	17	—	40001810	40001809	—	VH
RMI 130 P	Ø48	180	Ø13	215	—	—	20	—	40001804	40000652	—	VI
RMI 150 P	Ø55	180	Ø13	215	—	—	20	—	40001804	40001808	—	EN

MOTOVARIO	øA	øB	øC	øD	E	F	G	H	1	2	3	4
NMRV 110	Ø42	180	M12	215	—	—	24.5	—	02511018	40001890	—	FE
NMRV 90	Ø35	130	M10	165	—	—	17	4	40001810	02591038	—	UQ

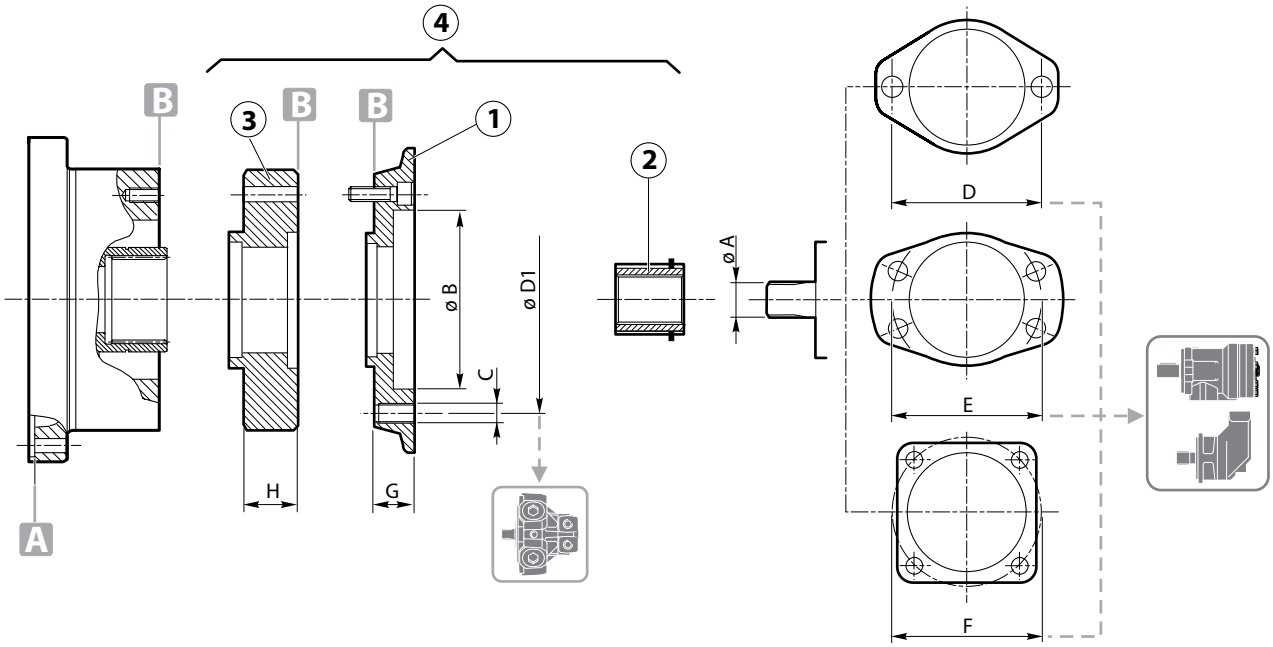

CALZONI	A	øB	øC	øD1	E	F	G	H	1	2	3	4
MR700	8x52x60	220	M12	290	—	—	55.5	—	02511229	02591156	—	4J

DANFOSS	A	øB	øC	øD	E	F	G	H	1	2	3	4
OMV	16/32-16	160	M16	—	—	200	73	—	025110102	025910102	—	5U
OMT 160-500	12/24-17	125	M12	—	—	160	66.5	—	025110117	02591123	—	3I
OMT 160-500	Ø40	125	M12	—	—	160	66.5	—	025110117	025910109	—	7W

EATON	A	øB	øC	øD	E	F	G	H	1	2	3	4
SERIE 6000	12/24-17	127	M14	—	—	162	29	—	02511192	02591123	—	3Q
SERIE 6000	12/24-14	127	M12	—	—	162	37	—	02511192	02591163	—	2G

INTERMOT	A	øB	øC	øD1	E	F	G	H	1	2	3	4
IAM H3 400-700	36x42x8	230	M14	254	—	—	43	—	02511197	02591128	—	8I
IAM300	8x32x38	190	M12	210	—	—	38.5	—	02511248	02591166	—	4N

LINDE	A	øB	øC	øD	E	F	G	H	1	2	3	4
HMF 135	16/32-27	152.4	M20	228.5	—	—	35	—	02511164	02631166	—	3Z
HMR 135	16/32-27	152.4	M20	228.5	—	—	35	—	02511164	02631166	—	3Z
HMF 105	16/32-23	127	M16	181	—	—	34	—	02511192	02631203	—	3H

M+S	A	øB	øC	øD	E	F	G	H	1	2	3	4
EPMT 160-500	12/24-17	125	M12	—	—	160	66.5	—	025110117	02591123	—	3I
EPMT 160-500	Ø40	125	M12	—	—	160	66.5	—	025110117	025910109	—	7W

REXROTH	A	øB	øC	øD	E	F	G	H	1	2	3	4
A2FM 107	W40x2	160	M16	—	—	200	51.5	—	02511230	02631193	—	3U
A2FM 160	W50x2	180	M16	—	—	224	62	—	02511163	02631150	—	3T
A2FM 200	W50x2	200	M20	—	—	250	73	—	02511165	02631150	—	4B
A6VM 107	W45x2	160	M16	—	—	200	53	—	02511167	02631160	—	9N
A6VM 160	W45x2	180	M16	—	—	224	62	—	02511163	02631151	—	9Q
A6VM 160	W50x2	180	M16	—	—	224	62	—	02511163	02631150	—	3T
A6VM 250	W50x2	200	M 20	—	—	250	73	—	02511165	02631150	—	4B
A6VM 355	W60x2	280	M16	—	—	320	84.5	—	02511261	02631210	—	5L
AA6VM 107, 160	8/16-13	152.4	M20	—	—	228.5	40	—	02511164	02631152	—	8X
AA2FM 107, 125	8/16-13	152.4	M20	—	—	228.5	40	—	02511164	02631152	—	8X
AA2FM 160, 180	8/16-13	152.4	M20	—	—	228.5	40	—	02511164	02631152	—	8X

SAI	A	øB	øC	øD	E	F	G	H	1	2	3	4
GM1	28x34x6	175	M12	210	—	—	29	—	02511263	02591176	—	6B
GM2	36x40	150	M12	250	—	—	38	—	02511209	02591141	—	9A
GM2	W40x3	150	M12	250	—	—	38	—	02511209	02591170	—	8B
GM3	W40x3	265	M18	310	—	—	43.5	—	02511151	02591044	—	4S

SAMHYDRAULIK	A	øB	øC	øD	E	F	G	H	1	2	3	4
H1C 160 M	W45x2	180	M16	—	—	224	62	—	02511039	02631151	—	9Q
H1C 226 M	W50x2	200	M20	—	—	250	73	—	02511165	02631150	—	4B
H2V 160 M	W45x2	1801	M16	—	—	224	62	—	02511163	02631151	—	9Q

SAUER	A	øB	øC	øD	E	F	G	H	1	2	3	4
51V250	16/32-27	165.1	M20	—	—	317.5	38	—	02511201	02631166	—	5J
90M 130	8/16-13	152.4	M 20	—	—	228.5	40	—	02511164	02631152	—	8X

VOAC	A	øB	øC	øD	E	F	G	H	1	2	3	4
F11-50 CETOP	W45x2	200	M20	250	—	—	73	—	02511165	02631151	—	5P
F11-150 SAE	8/16-13	152.4	M20	—	—	228.5	40	—	02511164	02631152	—	8X
F12-110 SAE	8/16-13	152.4	M20	—	—	228.5	40	—	02511164	02631152	—	8X
V14-160 ISO	W45x2	180	M16	—	—	224	62	—	02511163	02631151	—	9Q
F12-110 ISO	W45x2	160	M116	—	—	200	53	—	02511167	02631160	—	9N

Direct motor adapters available for:

KAWASAKY	Shaft
KAWASAKI HMC 80	**6/12-14**
KAWASAKI HMC/HMB/HPC 125	**6/12-20**
KAWASAKI HMB 200	**6/12 -14**
KAWASAKI HMB 200	**W85x3**

SAI	Shaft
GM3	**W40x3**
GM3	**8x46x54**
GM4/5	**8x56x65**
GM4/5	**W65x3**
GM6	**N80x3**

POCLAIN	Shaft
MS08/MSE08	**W70x3**
MS18/MSE18	**W90x3**
MS18/MSE18	**NF E-22 141 (m2.5 z34)**
MS50	**NF E-22 141 (m3.75 z33)**
MS02/MSE02	**W50x2**

POCLAIN HYDROBASE	Shaft
MS18/MSE18	**NF E-22 141 (m2.5 z34)**
MS35	**NF E-22 141 (m2.5 z34)**
MS50	**NF E-22 141 (m2.5 z38)**

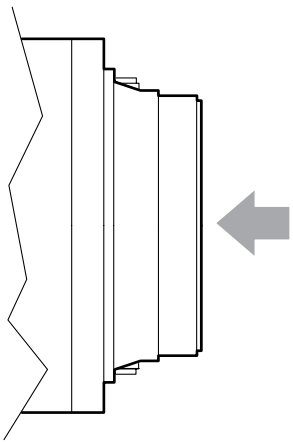

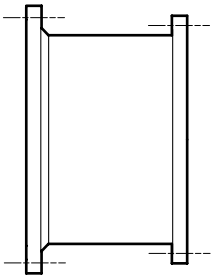

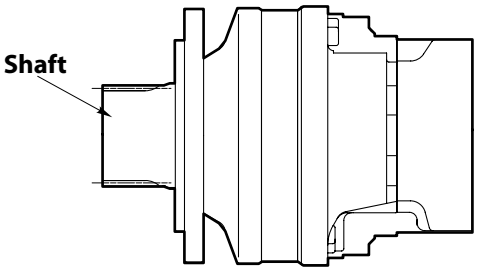

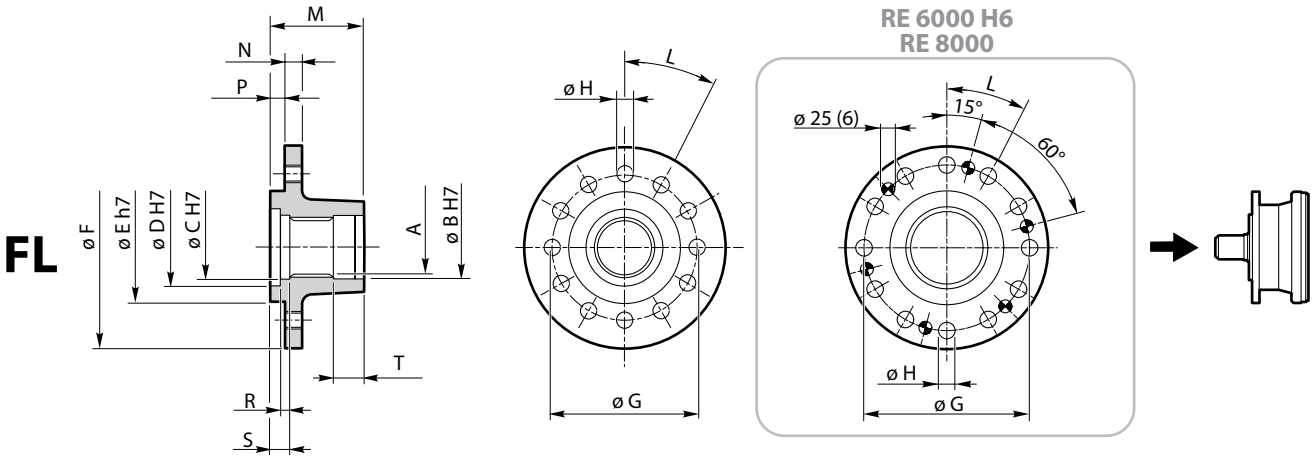

	VERSION	A	ø B	ø C	ø D	ø E	ø F	ø G	ø H	L
RE 110-210	N-P-T-TR	A40x36 DIN 5482	42	42	52	75	135	98	M12x1.5 (4)	90°
RE 240	T-TR	A58x53 DIN 5482	60	60	—	95	165	145	12.5 (12)	30°
RE 310-510-610	N-P-T-TL	A58x53 DIN 5482	60	60	—	95	165	145	12.5 (12)	30°
RE 810	N-P-T	A70x64 DIN 5482	72	72	—	125	208	175	19(12)	30°
RE 1020-1520-2000	T-H	A80x74 DIN 5482	85	85	—	125	208	175	19(12)	30°
RE 2520-3000	H	A100x94 DIN 5482	105	105	—	170	254	212	21 (12)	30°
RE 3510-4800	H	N 120x3 DIN 5480	124	130	—	160	298	250	21 (12)	30°
RE 6000	H	N 120x3 DIN 5480	120	120	—	200	308	260	25 (12)	30°
RE 6000	H6	N 150x5 DIN 5480	151	151	—	240	385	320	32 (12)	30°
RE 8000	H	N 150x5 DIN 5480	151	151	—	240	385	320	32 (12)	30°
GB 12010-16000	H	N 170x5 DIN 5480	170	175	—	250	450	400	28 (18)	20°
GB 21000	H	N220x5 DIN 5480	220	230	—	315	500	450	32 (18)	20°

	VERSION	M	N	P	R	S	T	CODE
RE 110-210	N-P-T-TR	63	12	10	7.5	13.5	20.5	40000618
RE 240	T-TR	74	14	10	8	—	24	02571148
RE 310-510-610	N-P-T-TL	74	14	10	8	—	24	02571148
RE 810	N-P-T	90	21	14	10	—	29	40001838
RE 1020-1520-2000	T-H	90.5	21	14	9.5	—	30.5	40001848
RE 2520-3000	H	110	24	20	12	—	37	40001851
RE 3510-4800	H	150	30	20	28	—	29	02571068
RE 6000	H	125	31	19	11	—	30	02571054
RE 6000	H6	150	35	25	11	—	33	02571063
RE 8000	H	150	35	25	11	—	33	02571063
GB 12010-16000	H	163	42	48	14	—	42	02571048
GB 21000	H	205	47	70	16	—	51.5	02571049

On demand for different size

BS - EP

BS

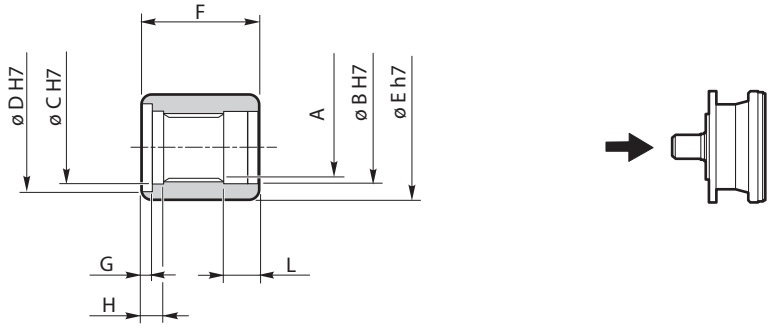

	VERSION	A	ø B	ø C	ø D	ø E	F	G	H	L	CODE
RE 110-210	N-P	A40x36 DIN 5482	42	42	—	60	55	—	7	20.5	40000608
RE 110-210	T-TR	A40x36 DIN 5482	42	42	51	60	67.5	5	12	20.5	40000617
RE 240	T-TR	A58x53 DIN 5482	60	60	72	94	85	16	23	25	40000642
RE 310-510-610	N-P-T-TL	A58x53 DIN 5482	60	60	72	94	85	16	23	25	40000642
RE 810	N-P-T	A70x64 DIN 5482	72	72	—	95	90	—	10	29	40001836
RE 1020-1520-2000	T-H	A80x74 DIN 5482	85	85	—	108	90.5	—	10.5	30.5	40001847
RE 2520-3000	H	A100x94 DIN 5482	105	105	—	136	110	—	12	33	40001850
RE 3510-4800	H	N120x3x9H DIN 5480	124	130	—	175	150	—	28	29	02631054
RE 6000	H	N120x3x9H DIN 5480	120	120	—	160	124.5	—	10.5	31	02631082
RE 6000	H6	N150x5x9H DIN 5480	151	151	—	220	150	—	11	33	02631092
RE 8000	H	N150x5x9H DIN 5480	151	151	—	220	150	—	11	33	02631092
GB 12010-16000	H	N170x5x9H DIN 5480	170	175	—	235	163	—	14	42	02631026
GB 21000	H	N220x5x9H DIN 5480	220	230	—	295	205	—	16	51.5	02631027

On demand for different size

EP

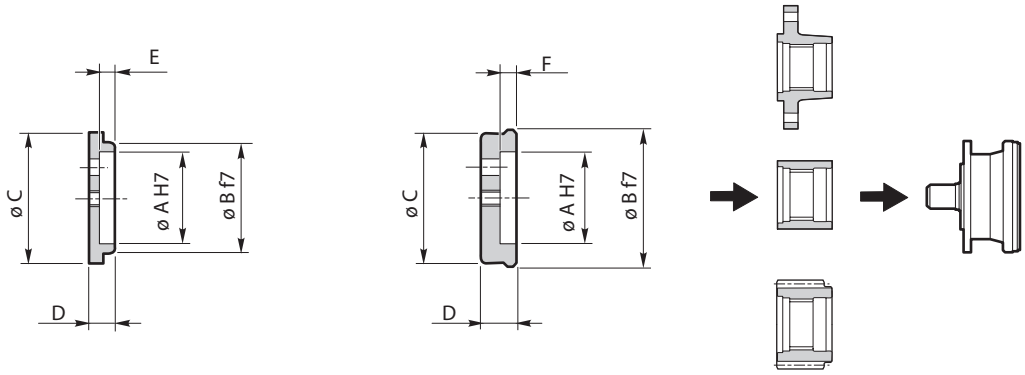

	VERSION	ø A	ø B	ø C	D	E	F	CODE
RE 110-210	N-P	35	42	50	9.5	4.5	—	40000609
RE 110-210	T-TR	35	52	50	14	—	6.8	40000614
RE 240	T-TR	50	60	70	13	5.5	—	40000613
RE 310-510	N-P	50	60	70	13	5.5	—	40000613
RE 310-510-610	T-TL	50	72	—	18	—	9	40000616
RE 810	N-P-T	62	72	80	18	9.25	—	40001832
RE 1020-1520-2000	T-H	70	85	98	19.5	8.5	—	40001840
RE 2520-3000	H	85	105	114	20	10	—	40001849
RE 3510-4800	H	90	130	—	26	—	14	02551072
RE 6000	H	100	120	135	21	9.5	—	02551060
RE 6000	H6	125	151	170	25	9	—	02551077
RE 8000	H	125	151	170	25	9	—	02551077
GB 12010-16000	H	150	175	198	31	13.5	—	02551044
GB 21000	H	200	230	260	43.5	19	—	02551046

On demand for different size

P

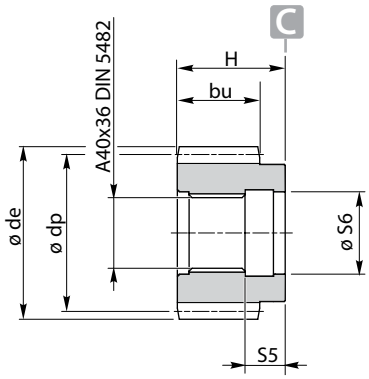

	M	z	x	ø de	ø dp	bu	H	S5	ø S6	Code
RE 110 RE 210	4	20	0	88	80	42	55	20.5	ø 42 H7	40100882
	4	24	0	104	96	45	57	20.5	ø 42 H7	40100889
	4.5	14	0.5	76.5	63	55	55	20.5	ø 42 H7	40100835
	4.5	16	0	81	72	70	80	20.5	ø 42 H7	40100802
	4.5	16	0	81	72	45	55	20.5	ø 42 H7	40100926
	4.5	16	0	81	72	45	75	20.5	ø 42 H7	40100943
	5	14	0	80	70	60	60	20.5	ø 42 H7	40100810
	5	14	0	80	70	70	80	20.5	ø 42 H7	40100812
	5	14	0.5	85	70	65	65	20.5	ø 42 H7	40100811
	5	14	0.5	85	70	60	90	20.5	ø 42 H7	40100885
	5	14	0.5	85	70	55	78	20.5	ø 42 H7	40100888
	5	14	0.5	84.5	70	47	55	20.5	ø 42 H7	02571014
	5	16	0	90	80	70	80	20.5	ø 42 H7	40100813
	5	17	0	95	85	70	80	20.5	ø 42 H7	40100815
	5	18	0	100	90	70	80	20.5	ø 42 H7	40100814
	5	20	0	109.5	100	45	74	20.5	ø 42 H7	40100918
	5	22	0	120	110	50	76	20.5	ø 42 H7	40100934
	6	12	0.5	89	72	70	80	20.5	ø 42 H7	40100825
	6	13	0	90	78	60	85	20.5	ø 42 H7	40100914
	6	13	0	90	78	50	80	20.5	ø 42 H7	40100915
	6	13	0.5	95	78	61	97	20.5	ø 42 H7	40100823
	6	14	0	96	84	50	60	20.5	ø 42 H7	40100824
	6	14	0	96	84	70	80	20.5	ø 42 H7	40100826
	6	14	0	96	84	70	100	20.5	ø 42 H7	40100827
	6	15	0	102	90	60	82.5	20.5	ø 42 H7	40100935
	6	15	0.5	108	90	40	73	20.5	ø 42 H7	40100819
	6	17	0	114	102	80	110	20.5	ø 42 H7	40100913
	6	18	0	120	108	70	80	20.5	ø 42 H7	40100830
	6	20	0	132	120	60	85	20.5	ø 42 H7	40100894
	8	12	0.5	118	96	60	65	20.5	ø 42 H7	40100841
	8	14	0.5	136	112	80	110	20.5	ø 42 H7	40100912
	8	15	0	136	120	70	80	20.5	ø 42 H7	40100846

On demand for different size

P

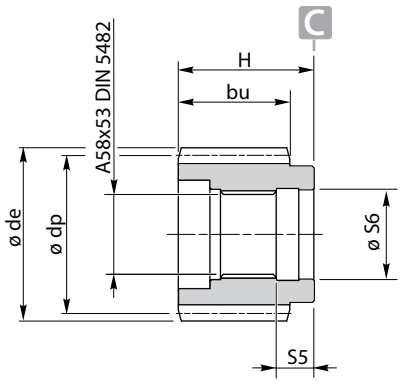

	M	z	x	ø de	ø dp	bu	H	S5	ø S6	Code
RE 240 RE 310 RE 510 RE 610	5	21	0	115	105	60	76	25	ø 60 H7	40100883
	5	22	0	120	110	50	76	25	ø 60 H7	02571051
	6	14	0.5	101.5	90	65	78	25	ø 60 H7	40100923
	6	16	0	108	96	70	80	25	ø 60 H7	40100867
	6	18	0	120	108	70	80	25	ø 60 H7	40100831
	6	20	0	132	120	75	80	25	ø 60 H7	40100873
	6	24	0	156	144	68	77.5	25	ø 60 H7	40100808
	7	14	0	112	98	78.5	78.5	25	ø 60 H7	40100874
	8	12	0.5	120	96	80	100	25	ø 60 H7	40100818
	8	13	0	120	104	68	78	25	ø 60 H7	02571111
	8	14	0	128	112	65	68	25	ø 60 H7	40100844
	8	14	0	128	112	75	85	25	ø 60 H7	40100845
	8	15	0	136	120	75	85	25	ø 60 H7	40100848
	8	16	0	144	128	75	85	25	ø 60 H7	40100849
	8	16	0.5	152	128	75	85	25	ø 60 H7	40100893
	8	17	0	149	136	78	110	25	ø 60 H7	40100937
	8	18	0	160	144	76	78	25	ø 60 H7	40100850
	8	18	0	160	144	96	98	25	ø 60 H7	40100898
	8	19	0	174	152	85	102	25	ø 60 H7	02571055
	10	11	0.5	136	110	80	96.5	25	ø 60 H7	40100807
	10	11	0.5	136	110	100	120.5	25	ø 60 H7	40100938
	10	12	0.5	149	120	80	96.5	25	ø 60 H7	40100820
	10	12	0.35	143	120	80	100	25	ø 60 H7	40100838
	10	13	0	150	130	80	80	25	ø 60 H7	40100929
	10	13	0	150	130	90	105	25	ø 60 H7	40100942
	10	14	0	160	140	80	80	25	ø 60 H7	40100866
	10	14	0	160	140	90	105	25	ø 60 H7	40100868
	10	15	0	170	150	80	80	25	ø 60 H7	40100839

	M	z	x	ø de	ø dp	bu	H	S5	ø S6	Code
RE 810	8	15	0.3	140.8	120	67	96	29	ø 72 H7	02571235
	8	17	0	152	136	80	99	29	ø 72 H7	02571121
	8	20	0	176	160	115	124	29	ø 72 H7	025710101
	8	23	0.5	208	184	86	131	29	ø 72 H7	40100853
	10	11	0.5	136	110	80	90	29	ø 72 H7	40100857
	10	12	0.5	150	120	90	90	29	ø 72 H7	02571110
	10	13	0.5	160	130	90	90	29	ø 72 H7	40100852
	10	13	0.5	160	130	99	99	29	ø 72 H7	02571000
	10	14	0	160	140	99	99	29	ø 72 H7	02571024
	10	14	0.5	170	140	67	96	29	ø 72 H7	02571236
	10	15	0	170	150	98	112	29	ø 72 H7	02571037
	10	15	0.5	180	150	98	112	29	ø 72 H7	02571183
	10	17	0.48	198	170	80	90	29	ø 72 H7	02571013
	12	11	0.5	167	132	90	120	29	ø 72 H7	40100821
	12	13	0.5	192	156	118	126	29	ø 72 H7	40100840
	12	13	0.3	187	156	75	90	29	ø 72 H7	02571019
	12	14	0.5	199	168	90	100	29	ø 72 H7	02571101
	14	12	0.3	205	168	80	110	29	ø 72 H7	02571102

On demand for different size

P

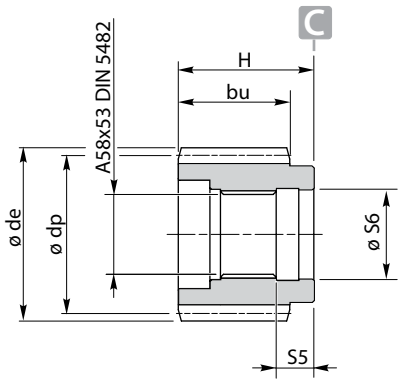

	M	z	x	ø de	ø dp	bu	H	S5	ø S6	Code
RE 1020 RE 1520 RE 2000	10	14	0.32	162.4	140	103	116	30.5	ø 85 H7	02571001
	10	15	0	170	150	90	115	30.5	ø 85 H7	40100940
	10	18	0	198	180	87	116	30.5	ø 85 H7	40100822
	12	11	0.5	167	132	100	120	30.5	ø 85 H7	02571136
	12	13	0.5	192	156	120	120	30.5	ø 85 H7	02571173
	12	14	0.5	199	168	90.5	90.5	30.5	ø 85 H7	40100856
	12	16	0	214	192	90	95	30.5	ø 85 H7	40100850
	14	11	0.5	192.36	154	97	97	30.5	ø 85 H7	025710113
	14	12	0.5	210	168	135	135	30.5	ø 85 H7	02571182
	14	14	0.5	233.8	196	105	105	30.5	ø 85 H7	02571103
	16	10	0.5	208	160	115	115	30.5	ø 85 H7	025710126
	16	19	0	336	304	120	120	30.5	ø 85 H7	02571006
	18	10	0.5	234	180	157	157	30.5	ø 85 H7	02571152
	18	13	0.5	288	234	100	100	30.5	ø 85 H7	02571208
	20	14	0.5	340	280	125	140	30.5	ø 85 H7	025710102

	M	z	x	ø de	ø dp	bu	H	S5	ø S6	Code
RE 2520 RE 3000	12	16	0.5	228.4	192	120	130	34	ø 105 H7	02571044
	14	14	0	224	196	110	110	34	ø 105 H7	02571030
	14	15	0.5	250.6	210	110	120	34	ø 105 H7	02571221
	16	13	0.5	256	208	145	145	34	ø 105 H7	02571201
	16	17	0.5	320	272	140	150	34	ø 105 H7	02571159
	16	19	0.5	352	304	140	150	34	ø 105 H7	02571167
	20	12	0.5	299	240	150	150	34	ø 105 H7	02571176

On demand for different size

VE

VE

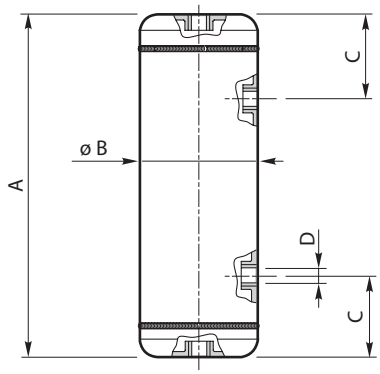

A	ø B	C	D	Capacity [Liters]	CODE
230	80	55	1/4" GAS (4)	1.0	40000712
330	130	85	1/4" GAS (4)	3.8	40000711
330	160	85	1/4" GAS (4)	5.5	40000710
510	150	85	1/4" GAS (4)	7.7	40000704
690	150	85	1/4" GAS (4)	10.7	40000706

On demand for different size

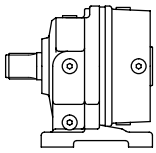	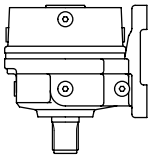	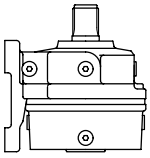	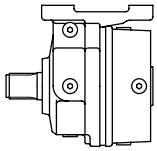
B3	**V5**	**V6**	**B8**
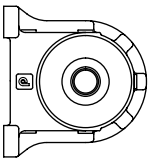	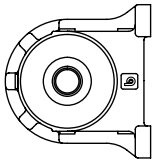	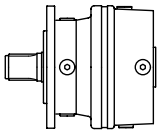	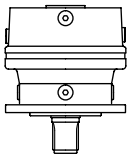
B6	**B7**	**B5**	**V1**
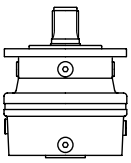			
V3			

pos. 0 = STANDARD

pos. 1= 90°

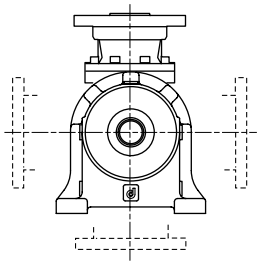

pos. 3= 270°

pos. 2 = 180°

N

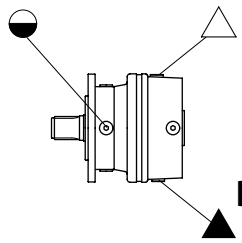

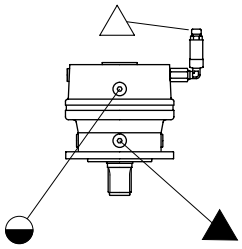

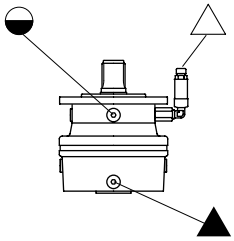

110÷1520

T - TL - TR

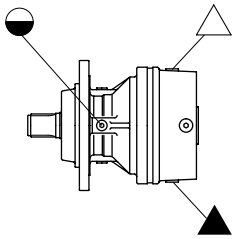

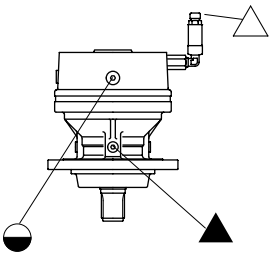

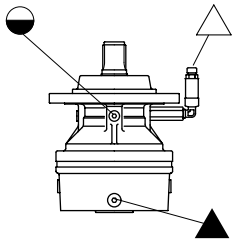

110÷810

H

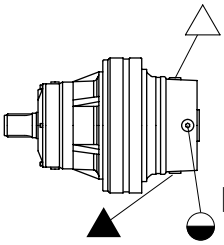

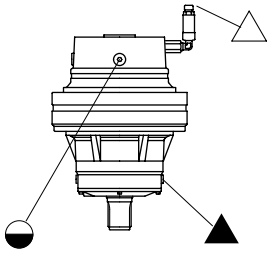

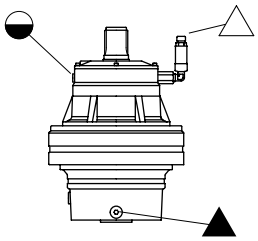

1520÷130000

F

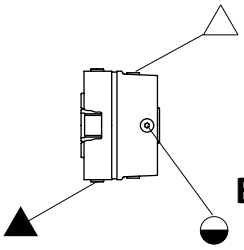

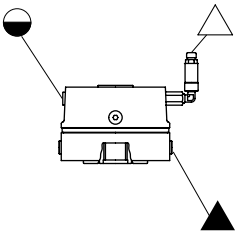

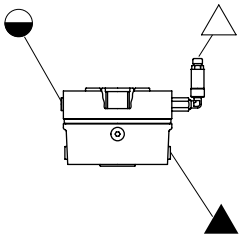

110÷810

F

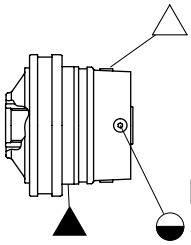

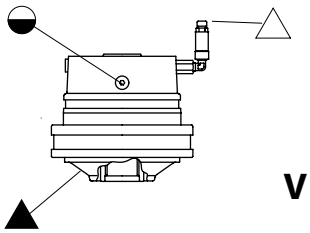

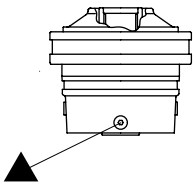

1020÷1520

P

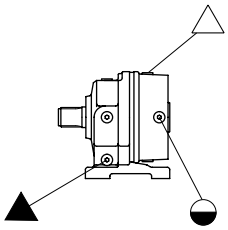
B3

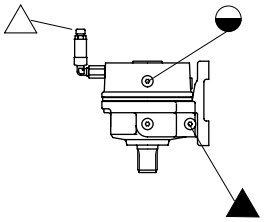
V5

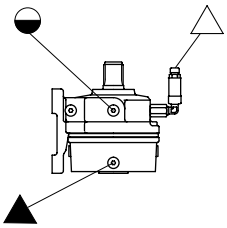
V6

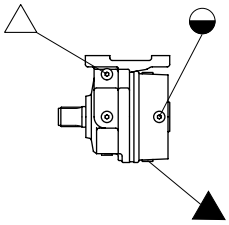
B8

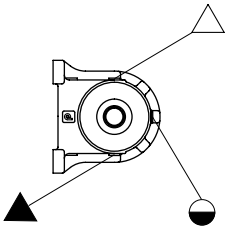
B6

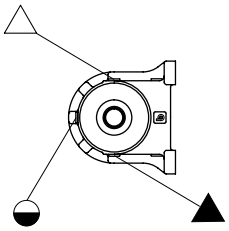
B7

110÷810

RAS

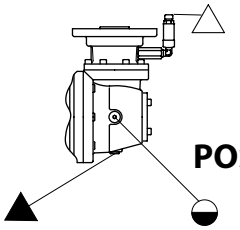
POS. 0

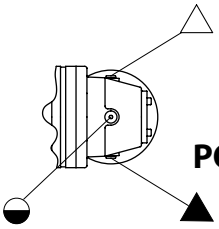
POS. 1

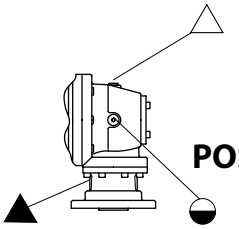
POS. 2

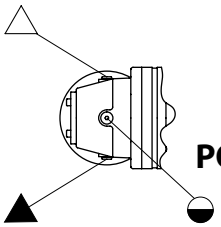
POS. 3

110÷510

RAD

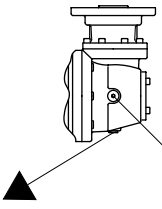
POS. 0

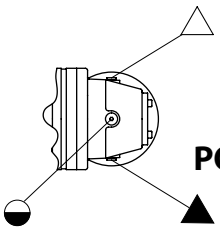
POS. 1

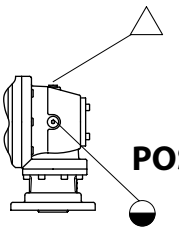
POS. 2

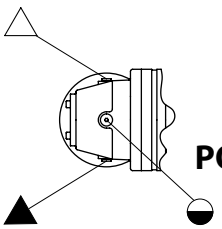
POS. 3

110÷510

[Liters]	B3	V5	V6	B6	B7	B8	B5	V1	V3
	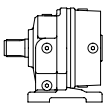	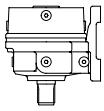	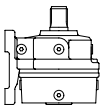	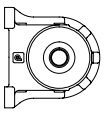	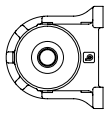	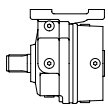	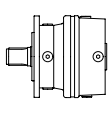	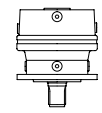
RE 111	0.7	1.4	1.4	0.7	1.4	1.4	0.4	0.8	0.8
RE 112	0.9	1.8	1.8	0.9	1.8	1.8	0.5	1	1
RE 113	1.1	2.2	2.2	1.1	2.2	2.2	0.7	1.4	1.4
RE 114	1.3	2.6	2.6	1.3	2.6	2.6	0.8	1.6	1.6
RE 211	0.8	1.6	1.6	0.8	1.6	1.6	0.5	1	1
RE 212	1	2	2	1	2	2	0.6	1.2	1.2
RE 213	1.2	2.4	2.4	1.2	2.4	2.4	0.7	1.4	1.4
RE 214	1.4	2.8	2.8	1.4	2.8	2.8	0.9	1.8	1.8
RE 241	0.8	1.6	1.6	0.8	1.6	1.6	0.5	1	1
RE 242	1	2	2	1	2	2	0.6	1.2	1.2
RE 243	1.2	2.4	2.4	1.2	2.4	2.4	0.7	1.4	1.4
RE 244	1.4	2.8	2.8	1.4	2.8	2.8	0.9	1.8	1.8
RE 311	1.4	2.8	2.8	1.4	2.8	2.8	1	2	2
RE 312	1.6	3.2	3.2	1.6	3.2	3.2	1.2	2.4	2.4
RE 313	1.7	3.4	3.4	1.7	3.4	3.4	1.3	2.6	2.6
RE 314	1.8	3.6	3.6	1.8	3.6	3.6	1.4	2.8	2.8
RE 511	1.5	3	3	1.5	3	3	1.1	2.2	2.2
RE 512	1.7	3.4	3.4	1.7	3.4	3.4	1.3	2.6	2.6
RE 513	1.8	3.6	3.6	1.8	3.6	3.6	1.5	3	3
RE 514	1.9	3.8	3.8	1.9	3.8	3.8	1.6	3.2	3.2
RE 611	1.6	3.2	3.2	1.6	3.2	3.2	1.2	2.4	2.4
RE 612	1.8	3.6	3.6	1.8	3.6	3.6	1.4	2.8	2.8
RE 613	1.9	3.8	3.8	1.9	3.8	3.8	1.6	3.2	3.2
RE 614	20	40	40	20	40	40	1.7	3.4	3.4
RE 811	1.8	3.6	3.6	1.8	3.6	3.6	1.5	3	3
RE 812	2	4	4	2	4	4	1.7	3.4	3.4
RE 813	2.2	4.4	4.4	2.2	4.4	4.4	1.9	3.8	3.8
RE 814	2.3	4.6	4.6	2.3	4.6	4.6	2	4	4
RE 1021	2.4	4.8	4.8	2.4	4.8	4.8	2.1	4.2	4.2
RE 1022	2.6	5.2	5.2	2.6	5.2	5.2	2.3	4.6	4.6
RE 1023	2.7	5.4	5.4	2.7	5.4	5.4	2.4	4.8	4.8
RE 1024	2.9	5.8	5.8	2.9	5.8	5.8	2.6	5.2	5.2

[Liters]	B5	V1	V3
	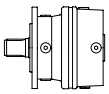	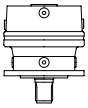	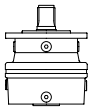
RE 1521	2.7	5.4	5.4
RE 1522	3	6	6
RE 1523	3.2	6.4	6.4
RE 1524	3.4	6.8	6.8
RE 2001	2.7	5.4	5.4
RE 2002	3	6	6
RE 2003	3.3	6.6	6.6
RE 2004	3.4	6.8	6.8
RE 2002L	3	6	6
RE 2003L	3.1	6.2	6.2
RE 2004L	3.2	6.4	6.4
RE 2521	3.9	7.7	7.7
RE 2522	4.5	9	9
RE 2523	4.7	9.4	9.4
RE 2524	5	9.9	9.9
RE 3001	3.8	7.6	7.6
RE 3002	4.6	9.1	9.1
RE 3003	4.8	9.5	9.5
RE 3004	5	10	10
RE 3511	4.9	9.8	9.8
RE 3512	5.7	11.4	11.4
RE 3513	6	12	12
RE 3514	6.2	12.4	12.4
RE 4801	4.7	9.4	9.4
RE 4802	6.8	13.6	13.6
RE 4803	7.2	14.4	14.4
RE 4804	7.4	14.8	14.8
RE 6001	7.5	15	15
RE 6002	8.5	17	17
RE 6003	9	18	18
RE 6004	9.3	18.6	18.6
RE 6002L	8.5	17	17
RE 6003L	9	18	18

[Liters]	B5	V1	V3
	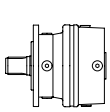	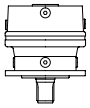	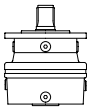
RE 6004L	9.2	18.4	18.4
RE 8001	8.3	16.6	16.6
RE 8002	10.2	20.4	20.4
RE 8003	11	22	22
RE 8004	11.5	23	23
RE 8005	11.7	23.4	23.4
RE 8002L	10.2	20.4	20.4
RE 8003L	10.8	21.6	21.6
RE 8004L	11.4	22.8	22.8
RE 8005L	11.6	23.2	23.2
GB 12011	13.5	27	27
GB 12012	15.5	31	31
GB 12013	16.5	33	33
GB 12014	16.8	33.6	33.6
GB 12015	17	34	34
GB 12012L	15.5	31	31
GB 12013L	16.3	32.6	32.6
GB 12014L	16.7	33.4	33.4
GB 12015L	17	34	34
GB 16001	14.5	29	29
GB 16002	18	36	36
GB 16003	19.2	38.4	38.4
GB 16004	19.6	39.2	39.2
GB 16005	19.8	39.6	39.6
GB 16002L	17	34	34
GB 16003L	18	36	36
GB 16004L	18.5	37	37
GB 16005L	18.7	37.4	37.4
GB 21001	20	40	40
GB 21002	23.5	47	47
GB 21003	24.5	49	49
GB 21004	25	50	50
GB 21005	25.5	51	51

[Liters]	B5	V1	V3
	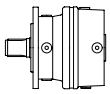	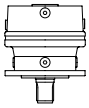	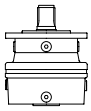
GB 26001	20	40	40
GB 26002	25.5	51	51
GB 26003	27.5	55	55
GB 26004	28.5	57	57
GB 26005	29	58	58
GB 31001	38	76	76
GB 31002	46.5	93	93
GB 31003	48.5	97	97
GB 31004	49.5	99	99
GB 31005	50	100	100
GB 40001	41	82	82
GB 40002	49	98	98
GB 40003	51	102	102
GB 40004	52	104	104
GB 40005	52	104	104
GB 45001	41	82	82
GB 45002	50	100	100
GB 45003	53.5	107	107
GB 45004	55	110	110
GB 45005	55.5	111	111
GB 53001	70	140	140
GB 53002	80	160	160
GB 53003	85	170	170
GB 53004	86.5	173	173
GB 53005	87	174	174
GB 61001	70	140	140
GB 61002	80	160	160
GB 61003	85	170	170
GB 61004	86.5	173	173
GB 61005	87	174	174
GB 85001	75	150	150
GB 85002	87.5	175	175
GB 85003	93	186	186

[Liters]	B5	V1	V3
	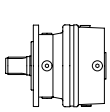	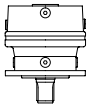	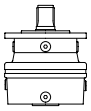
GB 85004	95	190	190
GB 85005	95.5	191	191
GB 110001	145	290	290
GB 110002	170	340	340
GB 110003	180	360	360
GB 110004	183	366	366
GB 110005	185	370	370
GB 130001	144	288	288
GB 130002	172	344	344
GB 130003	181	362	362
GB 130004	185	370	370
GB 130005	186	372	372
GB 150001	143	286	286
GB 150002	172	344	344
GB 150003	185	370	370
GB 150004	187	374	374
GB 150005	188	376	376
GB 205001	255	510	510
GB 205002	300	600	600
GB 205003	318	636	636
GB 205004	326	652	652
GB 205005	329	658	658
GB 235001	255	510	510
GB 235002	300	600	600
GB 235003	335	670	670
GB 235004	345	690	690
GB 235005	247	494	494

[Liters]	B3-1	V5	V6	B6-1	B7	B8	B5-1	V1	V3
	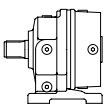	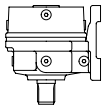	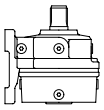	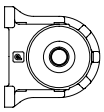	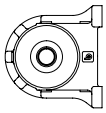	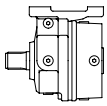	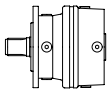	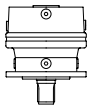	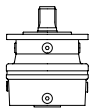
RA 112	1.5	3	3	1.5	3	3	1.2	2.4	2.4
RA 113	1.7	3.4	3.4	1.7	3.4	3.4	1.3	2.6	2.6
RA 114	1.9	3.8	3.8	1.9	3.8	3.8	1.5	3	3
RA 212	1.6	3.2	3.2	1.6	3.2	3.2	1.3	2.6	2.6
RA 213	1.8	3.6	3.6	1.8	3.6	3.6	1.4	2.8	2.8
RA 214	2	4	4	2	4	4	1.5	3	3
RA 242	1.6	3.2	3.2	1.6	3.2	3.2	1.3	2.6	2.6
RA 243	1.8	3.6	3.6	1.8	3.6	3.6	1.4	2.8	2.8
RA 244	2	4	4	2	4	4	1.5	3	3
RA 312	2.5	5	5	2.5	5	5	2.1	4.2	4.2
RA 313	2.4	4.8	4.8	2.4	4.8	4.8	2	4	4
RA 314	2.5	5	5	2.5	5	5	2.1	4.2	4.2
RA 512	2.6	5.2	5.2	2.6	5.2	5.2	2.2	4.4	4.4
RA 513	2.5	5	5	2.5	5	5	2.1	4.2	4.2
RA 514	2.6	5.2	5.2	2.6	5.2	5.2	2.3	4.6	4.6
RA 612	2.7	5.4	5.4	2.7	5.4	5.4	2.3	4.6	4.6
RA 613	2.9	5.8	5.8	2.9	5.8	5.8	2.5	5	5
RA 614	2.7	5.4	5.4	2.7	5.4	5.4	2.4	4.8	4.8
RA 812	3.8	7.6	7.6	3.8	7.6	7.6	3.5	7	7
RA 813	3.1	6.2	6.2	3.1	6.2	6.2	2.8	5.6	5.6
RA 814	3	6	6	3	6	6	2.7	5.4	5.4
RA 1022	4.4	8.8	8.8	4.4	8.8	8.8	4.1	8.2	8.2
RA 1023	3.7	7.4	7.4	3.7	7.4	7.4	3.4	6.8	6.8
RA 1024	3.5	7	7	3.5	7	7	3.2	6.4	6.4

[Liters]	B5-1	V1	V3
	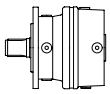	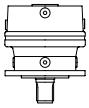	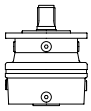
RA 1522	5.7	11.4	11.4
RA 1523	4.1	8.2	8.2
RA 1524	4	8	8
RA 2002	5.7	11.4	11.4
RA 2003	4.1	8.2	8.2
RA 2004	4.1	8.2	8.2
RA 2003L	4.1	8.2	8.2
RA 2004L	3.9	7.8	7.8
RA 2522	10.7	21.4	21.4
RA 2523	11	22	22
RA 2524	10.5	21	21
RA 3002	10.6	21.2	21.2
RA 3003	11.1	22.2	22.2
RA 3004	10.6	21.2	21.2
RA 3512	14.9	29.8	29.8
RA 3513	7.7	15.4	15.4
RA 3514	7.1	14.2	14.2
RA 4802	14.7	29.4	29.4
RA 4803	9.8	19.6	19.6
RA 4804	8.3	16.6	16.6
RA 6002	17.5	35	35
RA 6003	11.5	23	23
RA 6004	10.1	20.2	20.2
RA 6003L	11.5	23	23
RA 6004L	10.1	20.2	20.2
RA 8002	18.3	36.6	36.6
RA 8003	13.2	26.4	26.4
RA 8004	13	26	26
RA 8003L	13.2	26.4	26.4
RA 8004L	12.8	25.6	25.6
GBA 12013	18.5	37	37
GBA 12014	18.5	37	37
GBA 12015	17.9	35.8	35.8
GBA 12013L	18.5	37	37
GBA 12014L	18.3	36.6	36.6
GBA 12015L	18	36	36
GBA 16003	28	56	56
GBA 16004	22.2	44.4	44.4
GBA 16005	20.7	41.4	41.4

[Liters]	B5-1	V1	V3
	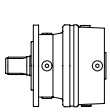	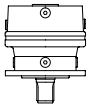	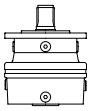
GBA 16003L	27	54	54
GBA 16004L	21	42	42
GBA 16005L	19.6	39.2	39.2
GBA 21003	33.5	67	67
GBA 21004	27.5	55	55
GBA 21005	26.1	52.2	52.2
GBA 26003	35.5	71	71
GBA 26004	30.5	61	61
GBA 26005	30.5	61	61
GBA 31004	51.5	103	103
GBA 31005	51.5	103	103
GBA 40004	54	108	108
GBA 40005	54	108	108
GBA 45004	63.5	127	127
GBA 45005	58.5	117	117
GBA 53004	96.5	193	193
GBA 53005	90	180	180
GBA 61004	95	190	190
GBA 61005	89.5	179	179
GBA 61006	88	176	176
GBA 85004	103	206	206
GBA 85005	98	196	196
GBA 85006	97	194	194
GBA 110005	186	372	372
GBA 110006	187	374	374
GBA 130005	380	760	388
GBA 130006	189	378	378

CC		
[Liters]	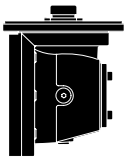	
CC30	1.6	**Complete filling**
CC120	2.2	
CC350	4	
CC600	6	
CC1000	16	

	P	T	TL	TR	F	N	H
kg	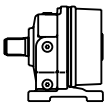	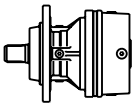	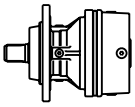	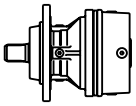	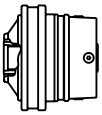	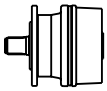	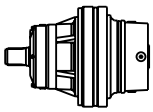
RE 111	23	20	—	20	14	17	—
RE 112	29.5	26.5	—	26.5	21	24	—
RE 113	36.5	33.5	—	33.5	27.5	30.5	—
RE 114	43	40	—	40	34	37	—
RE 211	25	22	—	22	16	19	—
RE 212	32	29	—	29	23	26	—
RE 213	38	35	—	35	30	32	—
RE 214	45	42	—	42	37	39	—
RE 241	25	—	—	22	—	—	—
RE 242	32	—	—	29	—	—	—
RE 243	38	—	—	35	—	—	—
RE 244	45	—	—	42	—	—	—
RE 311	52	47	47	—	24	35	—
RE 312	59	54	54	—	31	42	—
RE 313	66	61	61	—	38	49	—
RE 314	72	67	66	—	45	56	—
RE 511	57	52	52	—	29	40	—
RE 512	66	61	61	—	38	49	—
RE 513	73	68	68	—	45	56	—
RE 514	80	75	75	—	52	63	—
RE 611	58	53	53	—	30	41	—
RE 612	72	67	67	—	44	55	—
RE 613	79	74	74	—	51	62	—
RE 614	86	81	81	—	58	69	—
RE 811	80	70	—	—	—	67	—
RE 812	94	84	—	—	—	80	—
RE 813	100	90	—	—	—	87	—
RE 814	107	97	—	—	—	94	—
RE 1021	100	90	—	—	60	—	—
RE 1022	117	107	—	—	77	—	—

kg	P	T	TL	TR	F	N	H
	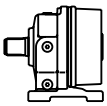	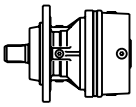	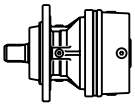	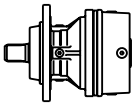	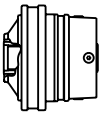	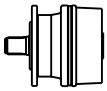	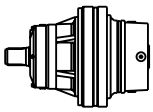
RE 1023	126	116	—	—	86	—	—
RE 1024	133	123	—	—	93	—	—
RE 1521	—	123	—	—	84	—	130
RE 1522	—	141	—	—	102	—	148
RE 1523	—	149	—	—	110	—	156
RE 1524	—	156	—	—	117	—	163
RE 2001	—	124	—	—	85	—	131
RE 2002	—	142	—	—	104	—	150
RE 2003	—	156	—	—	118	—	163
RE 2004	—	163	—	—	125	—	170
RE 2002L	—	137	—	—	99	—	145
RE 2003L	—	149	—	—	111	—	156
RE 2004L	—	153	—	—	115	—	160
RE 2521	—	—	—	—	151	—	185
RE 2522	—	—	—	—	180	—	214
RE 2523	—	—	—	—	194	—	228
RE 2524	—	—	—	—	201	—	235
RE 3001	—	—	—	—	152	—	186
RE 3002	—	—	—	—	199	—	233
RE 3003	—	—	—	—	207	—	241
RE 3004	—	—	—	—	216	—	250
RE 3511	—	—	—	—	225	—	239
RE 3512	—	—	—	—	260	—	274
RE 3513	—	—	—	—	278	—	292
RE 3514	—	—	—	—	287	—	301
RE 4801	—	—	—	—	226	—	240
RE 4802	—	—	—	—	311	—	325
RE 4803	—	—	—	—	330	—	344
RE 4804	—	—	—	—	339	—	353

kg	H	F
RE 6002L	365	340
RE 6003L	375	350
RE 6004L	382	357
RE 6001	315	290
RE 6002	370	345
RE 6003	390	365
RE 6004	395	370
RE 8001	410	380
RE 8002	500	470
RE 8003	540	510
RE 8004	555	525
RE 8005	560	530
RE 8002L	485	455
RE 8003L	520	490
RE 8004L	530	500
RE 8005L	535	505
GB 12011	650	615
GB 12012	750	715
GB 12013	785	750
GB 12014	800	765
GB 12015	810	775
GB 12012L	700	665
GB 12013L	745	710
GB 12014L	750	715
GB 12015L	757	722
GB 16001	690	655
GB 16002	860	825
GB 16003	915	880
GB 16004	935	900
GB 16005	940	905
GB 16002L	860	825
GB 16003L	865	830
GB 16004L	885	850
GB 16005L	890	855
GB 21001	930	880
GB 21002	1115	1065
GB 21003	1165	1115
GB 21004	1190	1140
GB 21005	1205	1155
GB 26001	980	920
GB 26002	1230	1170
GB 26003	1330	1270
GB 26004	1360	1300
GB 26005	1380	1320
GB 31001	1900	1750
GB 31002	2280	2130
GB 31003	2375	2225
GB 31004	2410	2260
GB 31005	2425	2275
GB 40001	2030	1880

kg	H	F
GB 40002	2400	2250
GB 40003	2500	2350
GB 40004	2530	2380
GB 40005	2540	2390
GB 45001	2030	1880
GB 45002	2435	2285
GB 45003	2610	2460
GB 45004	2665	2515
GB 45005	2682	2532
GB 53001	3550	3200
GB 53002	4060	3710
GB 53003	4250	3900
GB 53004	4350	4000
GB 53005	4370	4020
GB 61001	3550	3200
GB 61002	4060	3710
GB 61003	4250	3900
GB 61004	4350	4000
GB 61005	4370	4020
GB 85001	3850	3450
GB 85002	4410	4010
GB 85003	4650	4250
GB 85004	4750	4350
GB 85005	4785	4385
GB 110001	7520	6620
GB 110002	8780	7880
GB 110003	9155	8255
GB 110004	9250	8350
GB 110005	9285	8385
GB 130001	7535	6635
GB 130002	8800	7900
GB 130003	9210	8310
GB 130004	9380	8480
GB 130005	9430	8530
GB 150001	7550	6650
GB 150002	8795	7895
GB 150003	9280	8380
GB 150004	9460	8560
GB 150005	9500	8600
GB 205001	12240	11790
GB 205002	14330	13880
GB 205003	15040	14590
GB 205004	15410	14960
GB 205005	15500	15050
GB 235001	12250	11800
GB 235002	14580	14130
GB 235003	15830	15380
GB 235004	16200	15750
GB 235005	16300	15850

kg	P	T	TL	TR	F	N	H
	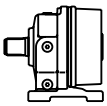	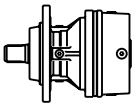	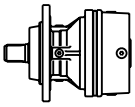	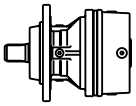	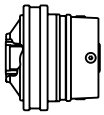	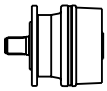	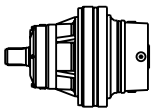
RA 112	43	40	—	40	34	37	—
RA 113	49.5	46.5	—	46.5	41	44	—
RA 114	56.5	53.5	—	53.5	47.5	50.5	—
RA 212	45	42	—	42	36	39	—
RA 213	52	49	—	49	43	46	—
RA 214	58	55	—	55	50	52	—
RA 242	45	—	—	42	—	—	—
RA 243	52	—	—	49	—	—	—
RA 244	58	—	—	55	—	—	—
RA 312	102	97	97	—	74	85	—
RA 313		74	74	—	51	62	—
RA 314	86	81	81	—	58	69	—
RA 512	107	102	102	—	79	90	—
RA 513	86	81	81	—	58	69	—
RA 514	93	88	88	—	65	76	—
RA 612	108	103	103	—	80	91	—
RA 613	122	117	117	—	94	105	—
RA 614	99	94	94	—	71	82	—
RA 812	170	160	—	—	—	157	—
RA 813	144	134	—	—	—	130	—
RA 814	120	110	—	—	—	107	—
RA 1022	190	180	—	—	150	—	—
RA 1023	167	157	—	—	127	—	—
RA 1024	146	136	—	—	106	—	—
RA 1522	—	258	—	—	219	—	265
RA 1523	—	191	—	—	152	—	198
RA 1524	—	169	—	—	130	—	176
RA 2002	—	259	—	—	220	—	266
RA 2003	—	192	—	—	154	—	200
RA 2004	—	176	—	—	138	—	183
RA 2003L	—	187	—	—	149	—	195
RA 2004L	—	169	—	—	131	—	176
RA 2522	—	—	—	—	286	—	320
RA 2523	—	—	—	—	270	—	304
RA 2524	—	—	—	—	214	—	248
RA 3002	—	—	—	—	287	—	321
RA 3003	—	—	—	—	289	—	323
RA 3004	—	—	—	—	257	—	291
RA 3512	—	—	—	—	575	—	589
RA 3513	—	—	—	—	350	—	364
RA 3514	—	—	—	—	398	—	412
RA 4802	—	—	—	—	576	—	590
RA 4803	—	—	—	—	446	—	460
RA 4804	—	—	—	—	380	—	394

kg	H	F
	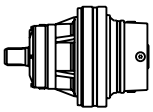	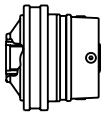
RA 6002	665	640
RA 6003	505	480
RA 6004	440	415
RA 6003L	500	475
RA 6004L	425	400
RA 8002	760	730
RA 8003	635	605
RA 8004	630	600
RA 8003L	620	590
RA 8004L	610	580
GBA 12013	885	850
GBA 12014	875	840
GBA 12015	850	815
GBA 12013L	835	800
GBA 12014L	835	800
GBA 12015L	800	765
GBA 16003	1210	1175
GBA 16004	1050	1015
GBA 16005	985	950
GBA 16003L	1210	1175
GBA 16004L	1000	965
GBA 16005L	935	900
GBA 21003	1465	1415
GBA 21004	1300	1250
GBA 21005	1240	1190
GBA 26003	1580	1520
GBA 26004	1465	1405
GBA 26005	1450	1390
GBA 31004	2510	2360
GBA 31005	2500	2350
GBA 40004	2635	2485
GBA 40005	2620	2470
GBA 45004	2960	2810
GBA 45005	2800	2650
GBA 53004	4600	4250
GBA 53005	4485	4135
GBA 61004	4600	4250
GBA 61005	4485	4135
GBA 61006	4420	4070
GBA 85004	5000	4600
GBA 85005	4885	4485
GBA 85006	4875	4475
GBA 110005	9385	8485
GBA 110006	9375	8475
GBA 130005	9730	8830
GBA 130006	9365	8665

kg	CC
	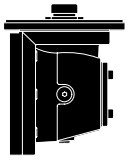
CC30	35
CC120	50
CC350	90
CC600	135
CC1000	350

RE 310

	ie	n_1= **750** RPM			n_1= **900** RPM			n_1= **1450** RPM			n_1= **2900** RPM				
		n_2 [RPM]	P_1 [kW]	T_2 [Nm]	n_2 [RPM]	P_1 [kW]	T_2 [Nm]	n_2 [RPM]	P_1 [kW]	T_2 [Nm]	n_2 [RPM]	P_1 [kW]	T_2 [Nm]	T_{2max} [Nm]	P_t [kW]
RE 311	**3.60**	208	***43.9***	1960	250	***49.9***	1860	403	***70***	1610	806	***113***	1310	4320	18 (N) 22 (T) 13 (F) 36 (P)
	4.25	176	***38.5***	2030	212	***43.8***	1920	341	***61***	1670	682	***99***	1350	5630	
	5.33	141	***25.3***	1680	169	***30.1***	1660	272	***47.1***	1610	544	***82***	1410	4610	
	6.20	121	***18.4***	1410	145	***21.8***	1400	234	***34.2***	1360	468	***66***	1310	3900	
	7.50	100	***11.9***	1110	120	***14.2***	1100	193	***22.2***	1070	387	***42.7***	1030	3070	
RE 312	**12.53**	60	***14.9***	2260	72	***17.3***	2180	116	***24.1***	1890	231	***39.2***	1540	4320	10 (N) 12 (T) 8 (F) 21 (P)
	14.79	51	***12.3***	2200	61	***14.6***	2180	98	***22.9***	2120	196	***39.2***	1810	5630	
	15.35	48.9	***12.3***	2280	59	***14.6***	2260	94	***20.6***	1980	189	***33.5***	1610	4320	
	18.12	41.4	***10.2***	2230	49.7	***12.1***	2210	80	***18.9***	2150	160	***33.5***	1900	5630	
	20.77	36.1	***6.8***	1720	43.3	***8.1***	1700	70	***12.7***	1650	140	***24.5***	1590	4320	
	22.74	33.0	***6.6***	1820	39.6	***7.9***	1800	64	***12.3***	1750	128	***23.7***	1690	4610	
	24.52	30.6	***6.8***	2030	36.7	***8.1***	2010	59	***12.7***	1950	118	***24.5***	1880	5960	
	26.43	28.4	***4.8***	1540	34.1	***5.7***	1520	55	***8.9***	1480	110	***17.2***	1420	3900	
	30.77	24.4	***5.0***	1850	29.3	***5.9***	1830	47.1	***9.3***	1780	94	***17.8***	1720	4610	
	35.77	21.0	***3.6***	1560	25.2	***4.3***	1550	40.5	***6.7***	1510	81	***12.9***	1450	3900	
	38.40	19.5	***3.9***	1830	23.4	***4.7***	1810	37.8	***7.3***	1760	76	***14.1***	1690	4610	
	44.64	16.8	***2.9***	1580	20.2	***3.5***	1570	32.5	***5.5***	1520	65	***10.5***	1470	3900	
	54.00	13.9	***1.9***	1240	16.7	***2.3***	1230	26.9	***3.5***	1200	54	***6.8***	1150	3070	
RE 313	**43.60**	17.2	***4.7***	2420	20.6	***5.6***	2400	33.3	***8.8***	2330	67	***16.8***	2230	4320	8 (N) 9 (T) 6 (F) 15 (P)
	51.47	14.6	***3.9***	2370	17.5	***4.6***	2340	28.2	***7.3***	2280	56	***13.9***	2190	5630	
	53.41	14.0	***3.9***	2450	16.9	***4.6***	2430	27.1	***7.2***	2360	54	***13.9***	2270	4320	
	63.05	11.9	***3.2***	2390	14.3	***3.8***	2370	23.0	***6.0***	2310	46.0	***11.5***	2220	5630	
	72.28	10.4	***2.9***	2500	12.5	***3.5***	2470	20.1	***5.4***	2400	40.1	***10.5***	2310	4320	
	77.24	9.7	***2.7***	2420	11.7	***3.2***	2400	18.8	***4.9***	2330	37.5	***9.5***	2240	5630	
	85.33	8.8	***2.4***	2440	10.5	***2.9***	2410	17.0	***4.5***	2350	34.0	***8.7***	2250	5630	
	104.53	7.2	***2.0***	2510	8.6	***2.4***	2440	13.9	***3.7***	2370	27.7	***7.2***	2280	5630	
	106.49	7.0	***2.0***	2510	8.5	***2.3***	2440	13.6	***3.7***	2380	27.2	***7.0***	2280	5630	
	130.45	5.7	***1.7***	2590	6.9	***2.0***	2520	11.1	***3.0***	2400	22.2	***5.8***	2310	5630	
	141.46	5.3	***1.3***	2240	6.4	***1.6***	2220	10.3	***2.5***	2160	20.5	***4.8***	2080	5960	
	163.71	4.6	***1.1***	2100	5.5	***1.3***	2050	8.9	***2.0***	1960	17.7	***3.8***	1890	4610	
	176.54	4.2	***1.1***	2270	5.1	***1.3***	2250	8.2	***2.0***	2190	16.4	***3.9***	2100	5960	
	190.31	3.9	***0.79***	1770	4.7	***0.92***	1720	7.6	***1.4***	1660	15.2	***2.7***	1590	3900	
	221.54	3.4	***0.84***	2200	4.1	***0.98***	2140	6.5	***1.5***	2000	13.1	***2.8***	1920	4610	
	257.54	2.9	***0.61***	1850	3.5	***0.71***	1800	5.6	***1.1***	1680	11.3	***2.1***	1620	3900	
	276.48	2.7	***0.63***	2040	3.3	***0.74***	2020	5.2	***1.2***	1970	10.5	***2.2***	1890	4610	
	321.41	2.3	***0.50***	1920	2.8	***0.59***	1860	4.5	***0.88***	1730	9.0	***1.7***	1640	3900	
RE 314	**219.42**	3.4	***1.1***	2800	4.1	***1.30***	2730	6.6	***1.9***	2540	13.2	***3.6***	2380	5630	6 (N) 7 (T) 5 (F) 12 (P)
	268.80	2.8	***0.93***	2890	3.3	***1.09***	2810	5.4	***1.6***	2620	10.8	***3.0***	2410	5630	
	296.94	2.5	***0.86***	2930	3.0	***1.00***	2850	4.9	***1.5***	2660	9.8	***2.7***	2420	5630	
	329.29	2.3	***0.79***	2980	2.7	***0.92***	2900	4.4	***1.4***	2700	8.8	***2.5***	2440	5630	
	363.76	2.1	***0.72***	3030	2.5	***0.84***	2940	4.0	***1.3***	2740	8.0	***2.3***	2470	5630	
	416.98	1.8	***0.61***	2930	2.2	***0.71***	2850	3.5	***1.1***	2680	7.0	***2.1***	2580	4320	
	453.98	1.7	***0.60***	3130	2.0	***0.70***	3040	3.2	***1.0***	2830	6.4	***1.9***	2550	5630	
	492.27	1.5	***0.56***	3170	1.8	***0.65***	3080	2.9	***0.98***	2870	5.9	***1.8***	2580	5630	
	556.14	1.3	***0.50***	3230	1.6	***0.59***	3140	2.6	***0.88***	2920	5.2	***1.6***	2630	5630	
	614.35	1.2	***0.46***	3280	1.5	***0.54***	3190	2.4	***0.81***	2960	4.7	***1.5***	2670	5630	
	766.71	0.98	***0.38***	3390	1.2	***0.45***	3290	1.9	***0.67***	3070	3.8	***1.2***	2760	5630	
	795.61	0.94	***0.35***	3190	1.1	***0.41***	3100	1.8	***0.61***	2880	3.6	***1.1***	2700	4320	
	939.26	0.80	***0.32***	3490	0.96	***0.38***	3400	1.5	***0.57***	3160	3.1	***1.0***	2850	5630	
	1018.49	0.74	***0.23***	2660	0.88	***0.27***	2590	1.4	***0.40***	2420	2.8	***0.77***	2320	5960	
	1178.68	0.64	***0.21***	2840	0.76	***0.24***	2760	1.2	***0.37***	2570	2.5	***0.66***	2310	4610	
	1271.08	0.59	***0.19***	2750	0.71	***0.22***	2680	1.1	***0.33***	2490	2.3	***0.62***	2350	5960	
	1595.08	0.47	***0.16***	2970	0.56	***0.19***	2890	0.91	***0.28***	2690	1.8	***0.51***	2420	4610	
	1990.66	0.38	***0.11***	2470	0.45	***0.13***	2400	0.73	***0.19***	2230	1.5	***0.36***	2120	4610	

		n_1= **750** RPM			n_1= **900** RPM			n_1= **1450** RPM			n_1= **2900** RPM				
	ie	**n_2** [RPM]	**P_1** [kW]	**T_2** [Nm]	**n_2** [RPM]	**P_1** [kW]	**T_2** [Nm]	**n_2** [RPM]	**P_1** [kW]	**T_2** [Nm]	**n_2** [RPM]	**P_1** [kW]	**T_2** [Nm]	**T_{2max}** [Nm]	**P_t** [kW]
RA 312	**10.03**	75	***18.6***	2230	90	***22.1***	2200	145	***34.7***	2150	289	***58***	1780	4320	10 (N) 12 (T) 8 (F) 17 (P)
	11.84	63	***15.4***	2180	76	***18.3***	2150	122	***28.7***	2100	245	***50***	1840	5630	
	14.40	52	***13.3***	2270	63	***15.7***	2250	101	***24.7***	2190	201	***44.7***	1980	4320	
	17.00	44.1	***11.0***	2220	53	***13.0***	2200	85	***20.4***	2140	171	***39.2***	2050	5630	
	21.33	35.2	***7.1***	1810	42.2	***8.5***	1800	68	***13.3***	1750	136	***25.5***	1680	4610	
	24.80	30.2	***5.2***	1530	36.3	***6.1***	1510	58	***9.6***	1470	117	***18.5***	1420	3900	
	30.00	25.0	***3.4***	1200	30.0	***4.0***	1190	48.3	***6.3***	1160	97	***12.0***	1110	3070	
RA 313	**40.09**	18.7	***5.2***	2410	22.4	***6.1***	2390	36.2	***9.6***	2320	72	***18.1***	2180	4320	6 (N) 7 (T) 5 (F) 11 (P)
	47.33	15.8	***4.3***	2360	19.0	***5.1***	2330	30.6	***8.0***	2270	61	***15.3***	2180	5630	
	49.11	15.3	***4.3***	2440	18.3	***5.1***	2410	29.5	***8.0***	2350	59	***15.3***	2260	4320	
	57.98	12.9	***3.5***	2380	15.5	***4.2***	2360	25.0	***6.6***	2290	50	***12.7***	2210	5630	
	66.46	11.3	***2.4***	1840	13.5	***2.8***	1820	21.8	***4.4***	1770	43.6	***8.5***	1700	4730	
	72.76	10.3	***2.3***	1950	12.4	***2.7***	1930	19.9	***4.3***	1870	39.9	***8.2***	1800	4610	
	78.46	9.6	***2.4***	2170	11.5	***2.8***	2150	18.5	***4.4***	2090	37.0	***8.5***	2010	5590	
	84.58	8.9	***1.7***	1640	10.6	***2.0***	1620	17.1	***3.1***	1580	34.3	***6.0***	1520	3900	
	98.46	7.6	***1.7***	1980	9.1	***2.1***	1960	14.7	***3.2***	1910	29.5	***6.2***	1830	4610	
	114.46	6.6	***1.3***	1670	7.9	***1.5***	1650	12.7	***2.3***	1610	25.3	***4.5***	1550	3900	
	122.88	6.1	***1.4***	1950	7.3	***1.6***	1930	11.8	***2.5***	1880	23.6	***4.9***	1810	4610	
	142.85	5.3	***1.0***	1690	6.3	***1.2***	1670	10.2	***1.9***	1630	20.3	***3.6***	1570	3900	
	172.80	4.3	***0.66***	1330	5.2	***0.79***	1320	8.4	***1.23***	1280	16.8	***2.37***	1230	3070	
RA 314	**139.51**	5.4	***1.7***	2620	6.5	***2.0***	2590	10.4	***3.1***	2500	20.8	***5.9***	2400	4320	5 (N) 6 (T) 4 (F) 10 (P)
	164.70	4.6	***1.4***	2680	5.5	***1.7***	2610	8.8	***2.5***	2440	17.6	***4.9***	2340	5630	
	170.91	4.4	***1.4***	2680	5.3	***1.6***	2650	8.5	***2.6***	2580	17.0	***4.8***	2430	4320	
	201.77	3.7	***1.2***	2770	4.5	***1.4***	2690	7.2	***2.1***	2500	14.4	***4.0***	2370	5630	
	231.29	3.2	***1.0***	2690	3.9	***1.2***	2670	6.3	***1.9***	2590	13.9	***3.6***	2470	4320	
	247.17	3.0	***1.0***	2850	3.6	***1.2***	2780	5.9	***1.8***	2580	11.7	***3.3***	2400	5630	
	273.05	2.7	***0.94***	2900	3.3	***1.1***	2820	5.3	***1.6***	2620	10.6	***3.0***	2410	5630	
	310.18	2.4	***0.66***	2320	2.9	***0.77***	2250	4.7	***1.15***	2100	9.3	***2.15***	1960	4610	
	340.76	2.2	***0.78***	3000	2.6	***0.91***	2910	4.3	***1.36***	2710	8.5	***2.45***	2440	5630	
	417.45	1.8	***0.65***	3090	2.2	***0.76***	3010	3.5	***1.14***	2800	6.9	***2.06***	2520	5630	
	452.66	1.7	***0.47***	2400	2.0	***0.55***	2370	3.2	***0.87***	2310	6.4	***1.67***	2220	5590	
	497.11	1.5	***0.36***	2050	1.8	***0.42***	1990	2.9	***0.64***	1850	5.8	***1.15***	1680	3900	
	564.92	1.3	***0.38***	2430	1.6	***0.45***	2400	2.6	***0.71***	2340	5.1	***1.36***	2250	5590	
	608.98	1.2	***0.31***	2110	1.5	***0.36***	2050	2.4	***0.54***	1910	4.8	***0.96***	1720	3900	
	708.92	1.1	***0.33***	2630	1.3	***0.38***	2560	2.0	***0.57***	2380	4.1	***1.03***	2140	4610	
	824.12	0.91	***0.24***	2210	1.1	***0.28***	2150	1.8	***0.41***	2000	3.5	***0.75***	1800	3900	
	884.74	0.85	***0.22***	2190	1.0	***0.26***	2160	1.6	***0.41***	2100	3.3	***0.78***	2020	4610	
	1028.51	0.73	***0.20***	2280	0.88	***0.23***	2220	1.4	***0.34***	2070	2.8	***0.62***	1860	3900	
	1244.16	0.60	***0.13***	1790	0.72	***0.15***	1740	1.2	***0.22***	1620	2.3	***0.40***	1460	3070	

RE 510

	ie	n_1= **750** RPM			n_1= **900** RPM			n_1= **1450** RPM			n_1= **2900** RPM				
		n_2 [RPM]	P_1 [kW]	T_2 [Nm]	n_2 [RPM]	P_1 [kW]	T_2 [Nm]	n_2 [RPM]	P_1 [kW]	T_2 [Nm]	n_2 [RPM]	P_1 [kW]	T_2 [Nm]	T_{2max} [Nm]	P_t [kW]
RE 511	**3.60**	208	***76***	3400	250	***86***	3220	403	***121***	2790	806	***196***	2260	11600	19 (N) 24 (T) 14 (F) 37 (P)
	4.25	176	***67***	3520	212	***76***	3330	341	***106***	2890	682	***172***	2340	11600	
	5.33	141	***52***	3450	169	***62***	3420	272	***88***	3010	544	***143***	2440	9500	
	6.20	121	***37.9***	2920	145	***45.1***	2890	234	***71***	2810	468	***127***	2530	8050	
	7.50	100	***24.6***	2290	120	***29.2***	2260	193	***45.8***	2200	387	***88***	2120	6320	
RE 512	**12.53**	60	***27.2***	4120	72	***30.9***	3900	116	***43.1***	3380	231	***70***	2750	11600	11 (N) 13 (T) 8 (F) 21 (P)
	14.79	51	***25.4***	4540	61	***30.1***	4500	98	***43.1***	3990	196	***70***	3240	11600	
	15.35	48.9	***23.2***	4320	59	***26.4***	4090	94	***36.9***	3540	189	***60***	2880	11600	
	18.12	41.4	***21.0***	4600	49.7	***24.9***	4550	80	***36.9***	4180	160	***60***	3400	11600	
	20.77	36.1	***13.8***	3470	43.3	***16.4***	3430	70	***25.7***	3340	140	***46.9***	3050	9540	
	22.74	33.0	***13.6***	3750	39.6	***16.2***	3710	64	***25.4***	3610	128	***48.8***	3470	9500	
	24.52	30.6	***13.8***	4090	36.7	***16.4***	4050	59	***25.7***	3940	118	***46.9***	3600	11300	
	26.43	28.4	***9.9***	3170	34.1	***11.8***	3140	55	***18.5***	3060	110	***35.5***	2940	8050	
	30.77	24.4	***10.2***	3820	29.3	***12.2***	3780	47.1	***19.1***	3680	94	***36.7***	3530	9500	
	35.77	21.0	***7.5***	3230	25.2	***8.9***	3190	40.5	***13.9***	3110	81	***26.7***	2990	8050	
	38.40	19.5	***8.0***	3700	23.4	***9.4***	3660	37.8	***14.8***	3560	76	***28.5***	3420	9500	
	44.64	16.8	***6.0***	3270	20.2	***7.2***	3230	32.5	***11.3***	3150	65	***21.7***	3030	8050	
	54.00	13.9	***3.9***	2560	16.7	***4.7***	2530	26.9	***7.3***	2470	54	***14.0***	2370	6320	
RE 513	**43.60**	17.2	***9.5***	4870	20.6	***11.2***	4820	33.3	***17.6***	4690	67	***30.0***	3990	11600	8 (N) 10 (T) 6 (F) 15 (P)
	51.47	14.6	***8.0***	4880	17.5	***9.5***	4830	28.2	***15.0***	4700	56	***28.7***	4520	11600	
	53.41	14.0	***7.8***	4920	16.9	***9.3***	4870	27.1	***14.5***	4740	54	***25.7***	4180	11600	
	63.05	11.9	***6.6***	4940	14.3	***7.9***	4880	23.0	***12.3***	4750	46.0	***23.7***	4570	11600	
	72.28	10.4	***5.9***	5020	12.5	***7.0***	4960	20.1	***10.9***	4820	40.1	***21.0***	4640	11600	
	77.24	9.7	***5.5***	4990	11.7	***6.5***	4940	18.8	***10.2***	4810	37.5	***19.6***	4620	11600	
	85.33	8.8	***5.0***	5020	10.5	***5.9***	4970	17.0	***9.3***	4840	34.0	***17.8***	4650	11600	
	104.53	7.2	***4.2***	5160	8.6	***4.9***	5030	13.9	***7.7***	4890	27.7	***14.7***	4700	11600	
	110.50	6.8	***4.0***	5220	8.1	***4.8***	5170	13.1	***7.3***	4940	26.2	***14.1***	4750	11600	
	130.45	5.7	***3.5***	5340	6.9	***4.0***	5200	11.1	***6.2***	4960	22.2	***12.0***	4760	11600	
	141.46	5.3	***2.7***	4520	6.4	***3.2***	4480	10.3	***5.0***	4360	20.5	***9.7***	4190	11300	
	163.71	4.6	***2.2***	4330	5.5	***2.6***	4220	8.9	***4.0***	4040	17.7	***7.8***	3890	9500	
	176.54	4.2	***2.2***	4580	5.1	***2.6***	4530	8.2	***4.1***	4410	16.4	***7.9***	4240	11300	
	190.31	3.9	***1.6***	3650	4.7	***1.9***	3550	7.6	***2.9***	3420	15.2	***5.7***	3290	8050	
	221.54	3.4	***1.7***	4540	4.1	***2.0***	4410	6.5	***3.0***	4120	13.1	***5.8***	3960	9500	
	257.54	2.9	***1.3***	3830	3.5	***1.5***	3720	5.6	***2.2***	3480	11.3	***4.3***	3340	8050	
	276.48	2.7	***1.3***	4140	3.3	***1.5***	4100	5.2	***2.4***	3990	10.5	***4.5***	3830	9500	
	321.41	2.3	***1.0***	3960	2.8	***1.2***	3850	4.5	***1.8***	3580	9.0	***3.5***	3390	8050	
RE 514	**219.42**	3.4	***2.3***	5780	4.1	***2.7***	5620	6.6	***4.0***	5230	13.2	***7.5***	4910	11600	7 (N) 8 (T) 5 (F) 12 (P)
	268.80	2.8	***1.9***	5960	3.3	***2.2***	5800	5.4	***3.4***	5390	10.8	***6.2***	4960	11600	
	296.94	2.5	***1.8***	6050	3.0	***2.1***	5880	4.9	***3.1***	5470	9.8	***5.6***	4990	11600	
	329.29	2.3	***1.6***	6140	2.7	***1.9***	5980	4.4	***2.8***	5560	8.8	***5.1***	5020	11600	
	363.76	2.1	***1.5***	6240	2.5	***1.7***	6070	4.0	***2.6***	5650	8.0	***4.7***	5080	11600	
	416.98	1.8	***1.3***	6100	2.2	***1.5***	5940	3.5	***2.2***	5580	7.0	***4.3***	5340	11600	
	453.98	1.7	***1.2***	6450	2.0	***1.4***	6270	3.2	***2.2***	5840	6.4	***3.9***	5260	11600	
	492.27	1.5	***1.2***	6530	1.8	***1.3***	6350	2.9	***2.0***	5910	5.9	***3.6***	5320	11600	
	556.14	1.3	***1.0***	6650	1.6	***1.2***	6470	2.6	***1.8***	6020	5.2	***3.3***	5420	11600	
	614.35	1.2	***0.96***	6750	1.5	***1.1***	6570	2.4	***1.7***	6110	4.7	***3.0***	5500	11600	
	766.71	0.98	***0.64***	5670	1.2	***0.76***	5610	1.9	***1.2***	5460	3.8	***2.3***	5250	11600	
	939.26	0.80	***0.64***	6950	0.96	***0.76***	6880	1.5	***1.2***	6520	3.1	***2.1***	5870	11600	
	1018.49	0.74	***0.46***	5370	0.88	***0.53***	5220	1.4	***0.80***	4880	2.8	***1.5***	4690	11300	
	1178.68	0.64	***0.43***	5840	0.76	***0.50***	5680	1.2	***0.75***	5290	2.5	***1.4***	4760	9500	
	1271.08	0.59	***0.38***	5550	0.71	***0.44***	5400	1.1	***0.66***	5030	2.3	***1.3***	4750	11300	
	1595.08	0.47	***0.33***	6120	0.56	***0.39***	5950	0.91	***0.58***	5540	1.8	***1.1***	4990	9500	
	1854.28	0.40	***0.24***	5160	0.49	***0.28***	5020	0.78	***0.42***	4670	1.6	***0.76***	4200	8050	
	1990.66	0.38	***0.22***	5000	0.45	***0.25***	4860	0.73	***0.38***	4520	1.5	***0.72***	4290	9500	

		n_1= **750** RPM			n_1= **900** RPM			n_1= **1450** RPM			n_1= **2900** RPM				
	ie	n_2 [RPM]	P_1 [kW]	T_2 [Nm]	n_2 [RPM]	P_1 [kW]	T_2 [Nm]	n_2 [RPM]	P_1 [kW]	T_2 [Nm]	n_2 [RPM]	P_1 [kW]	T_2 [Nm]	T_{2max} [Nm]	P_t [kW]
RA 512	**10.03**	75	***27.1***	3240	90	***30.8***	3070	145	***43.0***	2660	289	***70***	2160	11600	10 (N) 12 (T) 9 (F) 17 (P)
	11.84	63	***27.1***	3820	76	***30.8***	3620	122	***43.0***	3140	245	***70***	2550	11600	
	14.40	52	***20.0***	3440	63	***22.8***	3260	101	***31.8***	2820	201	***51.7***	2290	10000	
	17.00	44.1	***20.0***	4060	53	***22.8***	3840	85	***31.8***	3330	171	***51.7***	2710	11600	
	20.89	35.9	***9.7***	2430	43.1	***11.6***	2400	69	***18.1***	2340	139	***34.9***	2250	6320	
	21.33	35.2	***14.7***	3740	42.2	***17.5***	3700	68	***27.4***	3600	136	***51.7***	3400	9500	
	24.80	30.2	***10.7***	3160	36.3	***12.7***	3130	58	***19.9***	3040	117	***38.3***	2930	8050	
	30.00	25.0	***6.9***	2480	30.0	***8.2***	2450	48.3	***12.9***	2390	97	***24.8***	2290	6320	
RA 513	**40.09**	18.7	***7.3***	3390	22.4	***8.6***	3350	36.2	***12.7***	3070	72	***20.7***	2490	8660	7 (N) 9 (T) 5 (F) 12 (P)
	47.33	15.8	***7.3***	4000	19.0	***8.6***	3960	30.6	***12.7***	3630	61	***20.7***	2950	10300	
	49.11	15.3	***7.3***	4150	18.3	***8.6***	4110	29.5	***12.7***	3760	59	***20.7***	3060	10700	
	57.98	12.9	***7.3***	4900	15.5	***8.6***	4850	25.0	***12.7***	4440	50	***20.7***	3610	11600	
	66.46	11.3	***4.8***	3710	13.5	***5.7***	3670	21.8	***8.9***	3570	43.6	***17.2***	3430	9540	
	72.76	10.3	***4.7***	4010	12.4	***5.6***	3970	19.9	***8.8***	3860	39.9	***17.0***	3710	9500	
	78.46	9.6	***4.8***	4370	11.5	***5.7***	4330	18.5	***8.9***	4210	37.0	***17.2***	4050	11300	
	84.58	8.9	***3.4***	3390	10.6	***4.1***	3360	17.1	***6.4***	3270	34.3	***12.3***	3140	8050	
	98.46	7.6	***3.6***	4080	9.1	***4.2***	4040	14.7	***6.6***	3930	29.5	***12.8***	3780	9500	
	114.46	6.6	***2.6***	3450	7.9	***3.1***	3410	12.7	***4.8***	3320	25.3	***9.3***	3190	8050	
	122.88	6.1	***2.8***	3950	7.3	***3.3***	3910	11.8	***5.2***	3810	23.6	***9.9***	3660	9500	
	142.85	5.3	***2.1***	3500	6.3	***2.5***	3460	10.2	***3.9***	3360	20.3	***7.5***	3230	8050	
	172.80	4.3	***1.4***	2740	5.2	***1.6***	2710	8.4	***2.5***	2640	16.8	***4.9***	2530	6320	
RA 514	**139.51**	5.4	***3.4***	5440	6.5	***4.1***	5390	10.4	***6.1***	5020	20.8	***11.8***	4810	11600	6 (N) 7 (T) 5 (F) 11 (P)
	164.70	4.6	***3.0***	5530	5.5	***3.5***	5380	8.8	***5.2***	5020	17.6	***10.0***	4830	11600	
	170.91	4.4	***2.8***	5350	5.3	***3.3***	5300	8.5	***5.1***	5150	17.0	***9.7***	4870	11600	
	201.77	3.7	***2.5***	5710	4.5	***2.9***	5550	7.2	***4.4***	5160	14.4	***8.3***	4880	11600	
	231.29	3.2	***2.1***	5600	3.9	***2.5***	5540	6.3	***4.0***	5400	12.5	***7.3***	4950	11600	
	247.17	3.0	***2.1***	5880	3.6	***2.5***	5720	5.9	***3.7***	5320	11.7	***6.8***	4940	11600	
	273.05	2.7	***1.9***	5970	3.3	***2.3***	5810	5.3	***3.4***	5410	10.6	***6.2***	4970	11600	
	310.18	2.4	***1.4***	4770	2.9	***1.6***	4640	4.7	***2.4***	4320	9.3	***4.4***	4030	9500	
	340.76	2.2	***1.4***	5410	2.6	***1.7***	5360	4.3	***2.6***	5210	8.5	***5.0***	5010	11600	
	417.45	1.8	***1.3***	6370	2.2	***1.6***	6200	3.5	***2.4***	5760	6.9	***4.2***	5190	11600	
	452.66	1.7	***0.94***	4830	2.0	***1.1***	4780	3.2	***1.8***	4660	6.4	***3.4***	4480	11300	
	497.11	1.5	***0.75***	4230	1.8	***0.88***	4110	2.9	***1.3***	3820	5.8	***2.4***	3470	8050	
	564.92	1.3	***0.77***	4910	1.6	***0.91***	4850	2.6	***1.4***	4720	5.1	***2.7***	4530	11300	
	608.98	1.2	***0.63***	4360	1.5	***0.74***	4240	2.4	***1.1***	3940	4.8	***2.0***	3550	8050	
	708.92	1.1	***0.67***	5410	1.3	***0.79***	5260	2.0	***1.2***	4900	4.1	***2.1***	4410	9500	
	824.12	0.91	***0.49***	4560	1.1	***0.57***	4440	1.8	***0.85***	4130	3.5	***1.5***	3720	8050	
	884.74	0.85	***0.44***	4420	1.0	***0.52***	4380	1.6	***0.82***	4260	3.3	***1.6***	4100	9500	
	1028.51	0.73	***0.40***	4720	0.88	***0.47***	4590	1.4	***0.71***	4270	2.8	***1.3***	3840	8050	
	1244.16	0.60	***0.26***	3680	0.72	***0.31***	3580	1.2	***0.46***	3340	2.3	***0.82***	3000	6320	

RE 610

	ie	n_1= **750** RPM			n_1= **900** RPM			n_1= **1450** RPM			n_1= **2900** RPM				
		n_2 [RPM]	P_1 [kW]	T_2 [Nm]	n_2 [RPM]	P_1 [kW]	T_2 [Nm]	n_2 [RPM]	P_1 [kW]	T_2 [Nm]	n_2 [RPM]	P_1 [kW]	T_2 [Nm]	T_{2max} [Nm]	P_t [kW]
RE 611	**4.00**	188	***93***	4630	225	***106***	4380	363	***148***	3800	725	***240***	3080	14900	20 (N) 24 (T) 14 (F) 37 (P)
	4.55	165	***84***	4730	198	***95***	4480	319	***133***	3880	638	***216***	3160	12860	
RE 612	**14.40**	52	***34.3***	5970	63	***40.7***	5910	101	***62***	5580	201	***100***	4530	14900	15 (N) 14 (T) 9 (F) 22 (P)
	16.36	45.8	***26.8***	5320	55	***31.9***	5260	89	***50***	5120	177	***90***	4630	12860	
	17.00	44.1	***29.3***	6030	53	***34.8***	5970	85	***55***	5810	171	***89***	4760	14900	
	19.32	38.8	***23.0***	5370	46.6	***27.3***	5310	75	***42.7***	5170	150	***81***	4870	12860	
	21.33	35.2	***23.6***	6110	42.2	***28.1***	6040	68	***44.0***	5880	136	***76***	5100	14900	
	24.24	30.9	***18.5***	5440	37.1	***22.0***	5380	60	***34.5***	5240	120	***66***	5030	12860	
	28.18	26.6	***16.1***	5490	31.9	***19.1***	5430	51	***29.9***	5280	103	***58***	5080	12860	
	30.00	25.0	***12.2***	4440	30.0	***14.5***	4400	48.3	***22.8***	4280	97	***43.8***	4110	12300	
	34.09	22.0	***12.2***	5050	26.4	***14.5***	5000	42.5	***22.8***	4860	85	***43.8***	4670	12860	
RE 613	**50.11**	15.0	***10.8***	6410	18.0	***12.9***	6350	28.9	***20.2***	6180	58	***38.8***	5940	14900	9 (N) 10 (T) 7 (F) 17 (P)
	56.95	13.2	***8.5***	5710	15.8	***10.1***	5650	25.5	***15.8***	5500	51	***30.4***	5290	12860	
	61.39	12.2	***9.0***	6490	14.7	***10.6***	6420	23.6	***16.7***	6250	47.2	***32.0***	6000	14900	
	69.76	10.8	***7.0***	5780	12.9	***8.3***	5720	20.8	***13.1***	5560	41.6	***25.1***	5350	12860	
	82.36	9.1	***6.0***	5830	10.9	***7.1***	5770	17.6	***11.2***	5620	35.2	***21.5***	5400	12860	
	90.95	8.2	***6.2***	6630	9.9	***7.3***	6570	15.9	***11.5***	6390	31.9	***22.1***	6140	14900	
	98.08	7.6	***5.8***	6660	9.2	***6.8***	6590	14.8	***10.7***	6420	29.6	***20.6***	6170	14900	
	111.45	6.7	***4.5***	5930	8.1	***5.4***	5870	13.0	***8.4***	5710	26.0	***16.1***	5490	12860	
	123.08	6.1	***4.7***	6830	7.3	***5.5***	6680	11.8	***8.7***	6500	23.6	***16.6***	6250	14900	
	139.86	5.4	***3.7***	6060	6.4	***4.3***	5950	10.4	***6.8***	5790	20.7	***13.0***	5560	12860	
	153.60	4.9	***3.9***	7070	5.9	***4.6***	6870	9.4	***7.0***	6580	18.9	***13.5***	6330	14900	
	174.55	4.3	***3.0***	6270	5.2	***3.6***	6100	8.3	***5.5***	5860	16.6	***10.6***	5640	12860	
	202.91	3.7	***2.7***	6410	4.4	***3.1***	6240	7.1	***4.8***	5910	14.3	***9.2***	5680	12860	
RE 614	**174.39**	4.3	***3.6***	7200	5.2	***4.2***	7010	8.3	***6.4***	6630	16.6	***12.3***	6370	14900	7 (N) 9 (T) 6 (F) 13 (P)
	205.88	3.6	***3.1***	7390	4.4	***3.6***	7190	7.0	***5.5***	6690	14.1	***10.5***	6430	14900	
	233.95	3.2	***2.4***	6550	3.8	***2.8***	6380	6.2	***4.3***	5960	12.4	***8.2***	5730	12860	
	252.21	3.0	***2.6***	7620	3.6	***3.1***	7410	5.7	***4.6***	6890	11.5	***8.7***	6510	14900	
	286.60	2.6	***2.0***	6760	3.1	***2.4***	6570	5.1	***3.6***	6120	10.1	***6.8***	5800	12860	
	316.50	2.4	***2.1***	7820	2.8	***2.5***	7670	4.6	***3.8***	7140	9.2	***7.0***	6590	14900	
	354.17	2.1	***2.0***	8020	2.5	***2.3***	7800	4.1	***3.4***	7260	8.2	***6.3***	6640	14900	
	402.47	1.9	***1.5***	7110	2.2	***1.8***	6920	3.6	***2.7***	6440	7.2	***4.9***	5910	12860	
	450.73	1.7	***1.3***	6680	2.0	***1.5***	6610	3.2	***2.4***	6430	6.4	***4.6***	6180	14900	
	502.28	1.5	***1.3***	7360	1.8	***1.5***	7160	2.9	***2.2***	6660	5.8	***4.0***	6000	12860	
	565.83	1.3	***1.3***	8610	1.6	***1.5***	8370	2.6	***2.3***	7790	5.1	***4.2***	7020	14900	
	642.99	1.2	***1.0***	7640	1.4	***1.2***	7430	2.3	***1.8***	6910	4.5	***3.3***	6220	12860	
	706.15	1.1	***1.1***	8900	1.3	***1.3***	8660	2.1	***1.9***	8060	4.1	***3.5***	7250	14900	
	802.45	0.93	***0.86***	7900	1.1	***1.0***	7680	1.8	***1.5***	7150	3.6	***2.7***	6440	12860	
	886.15	0.85	***0.86***	8810	1.0	***1.0***	8570	1.6	***1.5***	7990	3.3	***2.8***	7510	14900	
	1006.99	0.74	***0.71***	8170	0.89	***0.82***	7950	1.4	***1.2***	7400	2.9	***2.2***	6660	12860	
	1105.92	0.68	***0.64***	8180	0.81	***0.76***	8100	1.3	***1.2***	7880	2.6	***2.3***	7570	14900	
	1256.73	0.60	***0.58***	8450	0.72	***0.68***	8220	1.2	***1.0***	7650	2.3	***1.8***	6890	12860	
	1416.08	0.53	***0.40***	6590	0.64	***0.47***	6410	1.0	***0.71***	6020	2.0	***1.4***	5780	12860	

	ie	n_1= **750** RPM			n_1= **900** RPM			n_1= **1450** RPM			n_1= **2900** RPM				
		n_2 [RPM]	P_1 [kW]	T_2 [Nm]	n_2 [RPM]	P_1 [kW]	T_2 [Nm]	n_2 [RPM]	P_1 [kW]	T_2 [Nm]	n_2 [RPM]	P_1 [kW]	T_2 [Nm]	T_{2max} [Nm]	P_t [kW]
RA 612	**11.14**	67	***27.1***	3600	81	***30.8***	3410	130	***43.0***	2950	260	***70***	2400	14900	11 (N) 12 (T) 9 (F) 16 (P)
	12.66	59	***27.1***	4090	71	***30.8***	3870	115	***43.0***	3350	229	***70***	2720	12800	
	16.00	46.9	***20.0***	3820	56	***22.8***	3620	91	***31.8***	3140	181	***51.7***	2550	11100	
	18.18	41.3	***20.0***	4340	49.5	***22.8***	4110	80	***31.8***	3560	160	***51.7***	2890	12800	
RA 613	**40.11**	18.7	***13.6***	6330	22.4	***16.1***	6270	36.1	***25.3***	6100	72	***48.6***	5860	14900	9 (N) 10 (T) 8 (F) 14 (P)
	45.58	16.5	***10.6***	5640	19.7	***12.6***	5580	31.8	***19.8***	5430	64	***38.1***	5220	12800	
	47.36	15.8	***11.6***	6390	19.0	***13.8***	6330	30.6	***21.6***	6160	61	***41.6***	5920	14900	
	57.60	13.0	***9.7***	6460	15.6	***11.5***	6400	25.2	***18.0***	6220	50	***34.6***	5980	14900	
	65.45	11.5	***7.6***	5760	13.8	***9.0***	5700	22.2	***14.1***	5540	44.3	***27.1***	5330	12800	
	68.00	11.0	***8.3***	6530	13.2	***9.8***	6460	21.3	***15.4***	6280	42.6	***29.6***	6040	14900	
	78.51	9.6	***6.4***	5820	11.5	***7.6***	5760	18.5	***11.9***	5600	36.9	***22.8***	5380	12800	
	85.33	8.8	***6.7***	6610	10.5	***7.9***	6540	17.0	***12.4***	6370	34.0	***23.9***	6120	14900	
	96.97	7.7	***5.2***	5890	9.3	***6.2***	5830	15.0	***9.7***	5670	29.9	***18.7***	5450	12800	
	112.73	6.7	***4.5***	5940	8.0	***5.4***	5880	12.9	***8.4***	5720	25.7	***16.2***	5500	12800	
RA 614	**160.36**	4.7	***3.9***	7110	5.6	***4.6***	6920	9.0	***7.0***	6600	18.1	***13.5***	6340	14900	6 (N) 7 (T) 5 (F) 11 (P)
	182.23	4.1	***3.1***	6310	4.9	***3.6***	6140	8.0	***5.5***	5880	15.9	***10.6***	5650	12800	
	196.45	3.8	***3.3***	7330	4.6	***3.8***	7140	7.4	***5.8***	6680	14.8	***11.1***	6420	14900	
	231.92	3.2	***2.9***	7520	3.9	***3.3***	7320	6.3	***5.0***	6810	12.5	***9.5***	6480	14900	
	263.54	2.8	***2.2***	6670	3.4	***2.6***	6490	5.5	***3.9***	6040	11.0	***7.5***	5770	12800	
	291.03	2.6	***2.4***	7780	3.1	***2.8***	7570	5.0	***4.1***	7050	10.0	***7.7***	6560	14900	
	313.85	2.4	***2.2***	7870	2.9	***2.6***	7660	4.6	***3.9***	7130	9.2	***7.2***	6590	14900	
	356.64	2.1	***1.7***	6990	2.5	***2.0***	6800	4.1	***3.0***	6320	8.1	***5.6***	5870	12800	
	393.85	1.9	***1.8***	7920	2.3	***2.1***	7840	3.7	***3.2***	7380	7.4	***5.8***	6680	14900	
	447.55	1.7	***1.4***	7230	2.0	***1.7***	7030	3.2	***2.5***	6540	6.5	***4.5***	5950	12800	
	491.52	1.5	***1.4***	7810	1.8	***1.7***	7730	3.0	***2.6***	7520	5.9	***4.8***	6870	14900	
	558.55	1.3	***1.2***	7480	1.6	***1.4***	7270	2.6	***2.1***	6770	5.2	***3.7***	6090	12800	
	629.37	1.2	***0.84***	5960	1.4	***0.99***	5900	2.3	***1.6***	5740	4.6	***3.0***	5520	12800	

N (110-210-310-510-810) - P (110-210-310-510-610)

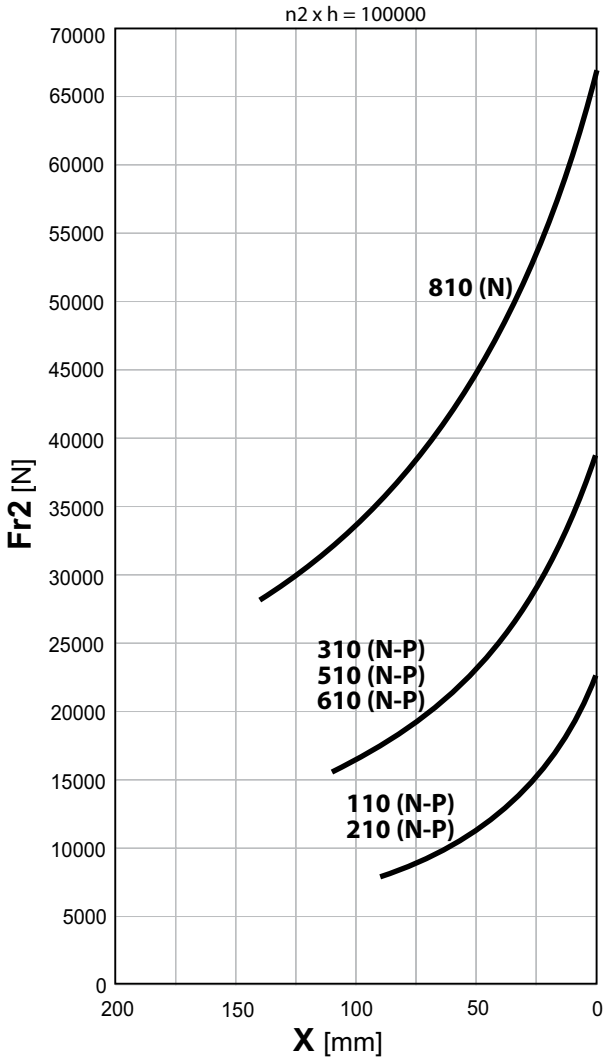

T (240-310-510-810-1020-1520-2000) - TL (310-510) - P (810-1020)

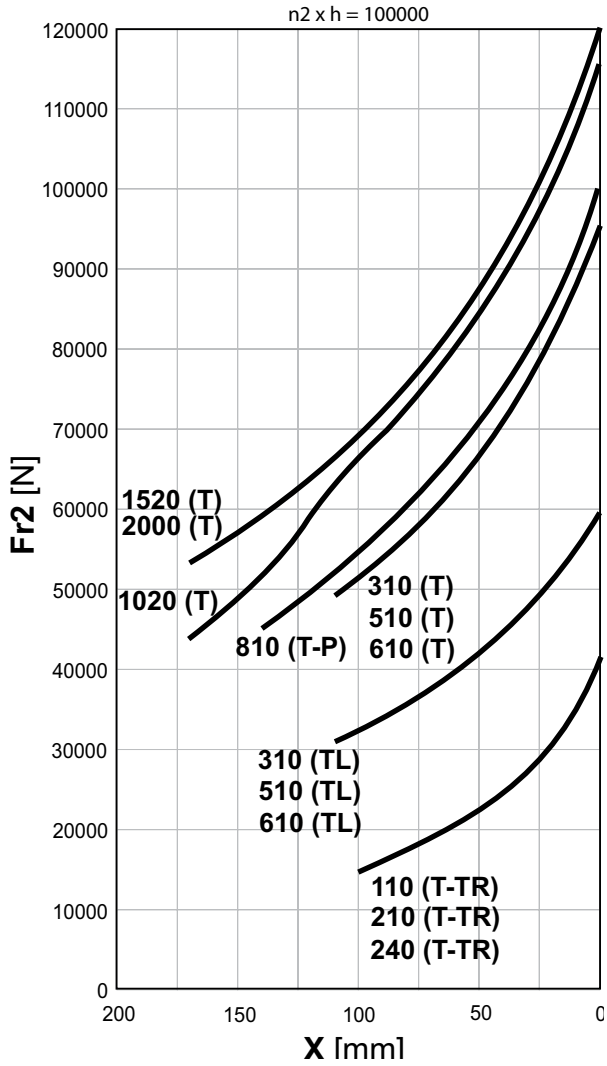

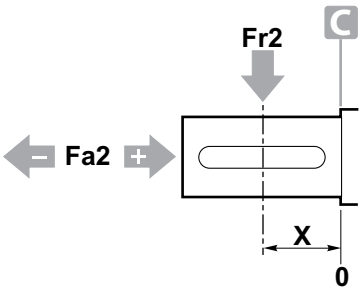

n2 x h = 100000

RE-RA	Fa2 [N]									
	FS		N		P		T		TL	
	Fa2 (-)	Fa2 (+)	Fa2 (-)	Fa2 (+)	Fa2 (-)	Fa2 (+)	Fa2 (-)	Fa2 (+)	Fa2 (-)	Fa2 (+)
110	6800	6800	19250	19250	19250	19250	22500	35500	—	—
210	6800	6800	19250	19250	19250	19250	22500	35500	—	—
240	7350	7350	—	—	—	—	25700	34400	—	—
310	10500	10500	39500	39500	58400	58400	57500	78500	48500	48500
510	10500	10500	39500	39500	58400	58400	57500	78500	48500	48500
610	10500	10500	39500	39500	58400	58400	57500	78500	48500	48500
810	21500	21500	58400	58400	58400	88500	58400	88500	—	—
1020	19000	19000	—	—	58400	88000	60500	104500	—	—
1520	27000	27000	—	—	—	—	73400	104500	—	—
2000	27000	27000	—	—	—	—	73400	104500	—	—

	n_2 x h						
	20000	40000	60000	80000	100000	200000	400000
K_f	1.7	1.3	1.15	1.06	1	0.8	0.63

Simbologia e unità di misura

Simbolo	Unità di misura	Descrizione
$\_1$		valore riferito all'ingresso
$\_2$		valore riferito all'uscita
bu	mm	altezza fascia dentata
de	mm	diametro esterno
dp	mm	diametro primitivo teorico
fa	N	carico assiale
f_{amax}	N	carico assiale massimo
f_r	N	carico radiale
H	mm	altezza pignone
i_e	-	rapporto di riduzione effettivo
m	mm	modulo
n	RPM	velocità
n_{max}	RPM	velocità massima
nxh	RPMxh	indice di durata
P_1	kW	potenza nominale
pb	bar	pressione apertura freno
pmax	bar	pressione massima freno
P_t	kW	potenza termica
T	Nm	coppia
T_b	Nm	coppia frenante
T_{max}	Nm	coppia massima
X	mm	distanza applicazione carico
x	-	correzione dentatura
z	-	numero di denti

Simbolo	Descrizione
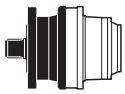	Supporto in uscita
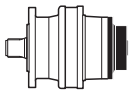	Entrata
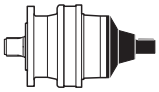	Supporto in entrata
...Nm	Coppia di serraggio [Nm]
	Quantità d'olio [litri]
	Peso [kg]
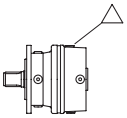	Carico olio / sfiato
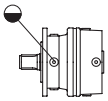	Livello olio
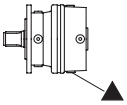	Scarico olio
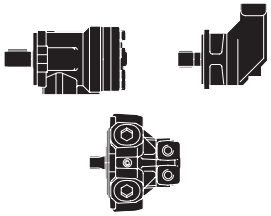	Motori idraulici
	Motori elettrici
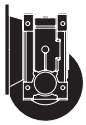	Riduttore a vite senza fine
	Vite di fissaggio raccomandata

Definizioni tecniche

Tutti i valori prestazionali indicati nel presente catalogo sono calcolati secondo le normative ISO 6336 e ISO 281,ma potrebbero non rispondere a ulteriori requisiti richiesti dai regolamenti interni degli Enti certificatori. Per selezioni in accordo con tali regolamenti contattare il servizio commerciale Dinamic Oil.

f_S - Fattore di servizio

è il fattore che tiene conto della gravosità dell'applicazione; dipende dalle condizioni di funzionamento, dal tipo di azionamento e dalla frequenza degli avviamenti.
I dati forniti nel presente catalogo sono calcolati per $f_s = 1$.
Il valore del fattore di servizio di un riduttore è calcolabile dividendo la sua potenza nominale per la potenza assorbita.

Fattori di servizio

	CONDIZIONI DI FUNZIONAMENTO								
	Uniforme U			Variabile con urti moderati M			Variabile con urti forti H		
ore / giorno	AVVIAMENTI / ORA								
	< 16	16 - 63	64 - 250	< 16	16 - 63	64- 250	< 16	16 - 63	64 - 250
< 0.5	0.9	1.3	1.5	0.9	1.3	1.5	1.2	1.5	1.8
0.5 - 3	0.9	1.3	1.5	1.2	1.5	1.8	1.7	2.0	2.3
3 - 8	1.2	1.5	1.8	1.4	1.8	2.0	1.9	2.3	2.8
8 - 24	1.4	1.8	2.0	1.7	2.0	2.5	2.4	2.8	3.0

P_1 - Potenza nominale [kW]

è la potenza meccanica trasmissibile dal riduttore, riferita all'ingresso, alla quale con $f_s = 1$ il riduttore ha una durate di vita teorica pari a 10.000 ore secondo la norma ISO 6336. Tale valore non tiene conto di eventuali limiti di capacità termica del riduttore, ma si basa esclusivamente sulla tenuta meccanica in funzione della velocità di utilizzo.

P_a - Potenza assorbita [kW]

rispetto alla potenza installata o disponibile, è il valore di potenza realmente assorbita dall'applicazione, riferita all'ingresso del riduttore.

P_t - Potenza termica [kW]

è la massima potenza meccanica che il riduttore può trasmettere in funzionamento continuo, con lubrificazione a sbattimento, senza oltrepassare il livello termico limite (temperatura dell'olio non superiore a 90°C).
Potenze superiori possono essere trasmesse utilizzando tenute in viton e oli sintetici o appositi dispositivi di raffreddamento.
I valori indicati per le varie grandezze di riduttore si riferiscono ad un funzionamento continuo con velocità in ingresso di 1500 RPM, temperatura ambiente di 20°C, altitudine 0 / 500 m, applicazione al coperto.
Per diverse condizioni di impiego il valore di potenza termica deve essere moltiplicato per i fattori termici indicati nella seguente tabella. Per periodi di funzionamento limitati, seguiti da periodi di riposo sufficientemente lunghi da garantire un opportuno raffreddamento del riduttore, la potenza termica perde il suo significato e può essere trascurata.

Fattori termici

Temperatura ambiente	Tempo di funzionamento [%]				
	100%	80%	60%	40%	20%
10°	1.2	1.3	1.4	1.6	1.8
20°	1.0	1.1	1.3	1.4	1.6
30°	0.8	1.0	1.1	1.3	1.4
40°	0.7	0.8	1.0	1.1	1.3
50°	0.5	0.7	0.8	1.0	1.1

Altitudine [m]	Velocità in ingresso [RPM]				
	400	800	1000	1500	2000
0	1.2	1.1	1.1	1.0	0.7
500	1.2	1.1	1.1	1.0	0.7
1000	1.1	1.0	1.0	0.9	0.6
1500	1.1	1.0	1.0	0.9	0.6
2000	1.1	1.0	1.0	0.9	0.6

P_d - Potenza da dissipare [kW]
rappresenta la potenza che un eventuale sistema di raffreddamento deve dissipare, nel caso in cui la potenza da trasmettere sia superiore alla potenza termica del riduttore.

η_m - Rendimento meccanico
è il rapporto tra potenza meccanica in uscita e potenza meccanica in ingresso; normalmente è considerato pari a 0.97 – 0.98 per ogni stadio di riduzione epicicloidale di cui è composto il riduttore e pari a 0.94 - 0.95 per l'eventuale coppia conica; il valore effettivo dipende da diversi fattori tra quali velocità, coppia, rapporto, posizione di montaggio e lubrificazione.

T_2 - Coppia trasmessa [Nm]
è il valore di coppia applicata in continuo alla velocità n_1, alla quale il riduttore ha una durata di vita teorica di 10000 h per gli ingranaggi e 5000 h (L_{h10}) per i cuscinetti dell' ingranaggeria.

T_{max} - Coppia massima trasmissibile [Nm]
è la coppia massima trasmissibile dall'accessorio eventualmente fornito a corredo del riduttore. Questo valore potrebbe limitare la coppia massima trasmissibile dal riduttore.

T_{2max} - Coppia massima [Nm]
è la coppia massima d'uscita ammissibile come punta o per brevi durate (calcolata al 90% Rs del componente più debole). Per azionamenti che comportano un elevato numero di avviamenti o inversioni occorre considerare valori di coppia massima apportunamente ridotti.
Il valore indicato si riferisce alla versione con albero femmina scanalato (FS); versioni diverse potrebbero avere valori inferiori.

T_b - Coppia frenante [Nm]
è il valore della coppia frenante trasmissibile staticamente dal freno negativo.

n_1 - Velocità in ingresso [RPM]
è la velocità al lato veloce del riduttore.

n_2 - Velocità in uscita [RPM]
è la velocità al lato lento del riduttore.

n_{1max} - Velocità massima [RPM]
è la velocità massima in ingresso al freno. Per applicazioni con valori superiori rivolgersi al servizio commerciale Dinamic Oil per verificare la compatibilità con l'applicazione.

i_e - Rapporto di riduzione effettivo
è il rapporto di riduzione effettivo, cioè il rapporto tra la velocità di ingresso e quella di uscita dal riduttore.

nxh - Indice di durata [RPMxh]
è il valore che equivale al prodotto tra la velocità e la durata di vita teorica espressa in ore. É espresso come $n_2$xh quando riferito alla velocità in uscita, come $n_1$xh quando riferito alla velocità in ingresso.

Valori indicativi delle durate richieste per diverse applicazioni

Applicazione	Ore di vita richieste
Macchine agricole	300 - 3000
Macchine con funzionamento intermittente o per brevi periodi (macchine per l'edilizia)	3000 - 8000
Macchine con funzionamento intermittente o per brevi periodi con alta affidabilità operativa (montacarichi)	8000 - 12000
Macchine con funzionamento per 8 ore al giorno, ma non pienamente utilizzate (macchine varie per l'industria, frantoi rotativi)	10000 - 25000
Macchine con funzionamento per 8 ore al giorno pienamente utilizzate (macchine varie per l'industria, nastri trasportatori)	20000 - 30000
Macchine con funzionamento continuo (laminatoi, macchine tessili)	40000 - 50000

k_f - Fattore di correzione
è il fattore da applicare per calcolare la durata teorica dei supporti con alberi maschio per valori di nxh diversi da quelli dei diagrammi riportati nel catalogo. Per tutti i riduttori le curve dei carichi esterni sono calcolate per:
- $n_2$xh = 100.000 per i supporti in uscita
- $n_1$xh = 1.500.000 per i supporti in ingresso

L_{min} - Lunghezza minima del braccio di reazione [mm]
è la lunghezza minima consigliata per il braccio di reazione da realizzarsi nelle applicazioni di tipo pendolare.

Symbols and Unit of Measurement

Symbol	Unit of measurement	Description
$\_1$		Input value
$\_2$		Output value
bu	mm	Height of toothed set
de	mm	External diameter
dp	mm	Theoretical primitive diameter
fa	N	Axial load
f_{amax}	N	Maximum axial load
f_r	N	Radial load
H	mm	Pinion height
i_e	-	Effective reduction ratio
m	mm	Module
n	RPM	Speed
n_{max}	RPM	Maximum speed
nxh	RPMxh	Duration index
P_1	kW	Rated power
pb	bar	Brake opening pressure
pmax	bar	Maximum brake pressure
P_t	kW	Thermal power
T	Nm	Torque
T_b	Nm	Braking torque
T_{max}	Nm	Maximum torque
X	mm	Load application distance
x	-	Tooth correction
z	-	Number of teeth

Symbol	Description
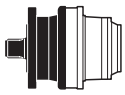	Support at output
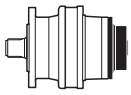	Input
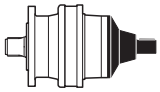	Support at input
...Nm	Tightening torque [Nm]
	Oil quantity [liters]
	Weight [kg]
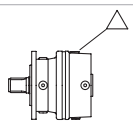	Oil fill / breather plug
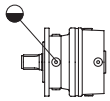	Oil level
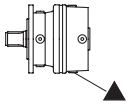	Oil drain
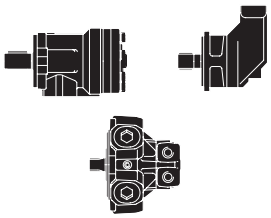	Hydraulic motors
	Electrical motors
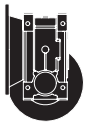	Wormgearbox
	Recommended screw

Technical Definitions

All values specified in this catalogue were calculated using the ISO 6336 and ISO 281 standards, but may not meet additional requirements set by the internal regulations of certifying bodies.
To select products that comply with these regulations, contact Dinamic Oil's sales team.

f_S - Service Factor

this factor represents the application's industrial rating; it depends on operating conditions, type of drive and frequency of start-up.
The information provided in this catalog is calculated for $f_s = 1$. The service factor value of a gearbox may be calculated by dividing its nominal power by its absorbed power.

Service factors

	OPERATING CONDITIONS								
	Uniform U			With moderate shocks **M**			With heavy shocks **H**		
hours / day	START-UPS / HOUR								
	< 16	**16 - 63**	**64 - 250**	**< 16**	**16 - 63**	**64- 250**	**< 16**	**16 - 63**	**64 - 250**
< 0.5	0.9	1.3	1.5	0.9	1.3	1.5	1.2	1.5	1.8
0.5 - 3	0.9	1.3	1.5	1.2	1.5	1.8	1.7	2.0	2.3
3 - 8	1.2	1.5	1.8	1.4	1.8	2.0	1.9	2.3	2.8
8 - 24	1.4	1.8	2.0	1.7	2.0	2.5	2.4	2.8	3.0

P_1 - Nominal Power [kW]

the mechanical power transmitted by the gearbox, related to input. At fs = 1 the gearbox has a theoretical lifetime of 10000 hours under the ISO 6336 standard. This value does not take into account any limits on the gearbox's thermal capacity, as it is exclusively based on mechanical resistance in accordance with the speed of use.

P_a - Absorbed Power [kW]

relates to installed or available power, the amount of power actually absorbed by the application, at the gearbox input

P_t - Thermal Power [kW]

the maximum mechanical power the gearbox can transmit while in continuous operation, with splash lubrication, without going beyond its maximum temperature level (oil temperature below 90°C). More power may be transmitted using a Viton seal and synthetic oils or special cooling devices. The values indicated for various gearbox sizes refer to continuous operation with input speeds of 1500 RPM, at an ambient temperature of 20°C and an altitude of 0 / 500 m, for indoor applications.
Under different conditions of use, thermal power must be multiplied by the thermal factors identified in the tables below. For limited periods of operation, followed by periods of rest long enough to guarantee sufficient cooling of the gearbox, thermal power loses its significance and may be neglected.

Thermal Factors

Ambient Temperature	Operating Time [%]				
	100%	80%	60%	40%	20%
10°	1.2	1.3	1.4	1.6	1.8
20°	1.0	1.1	1.3	1.4	1.6
30°	0.8	1.0	1.1	1.3	1.4
40°	0.7	0.8	1.0	1.1	1.3
50°	0.5	0.7	0.8	1.0	1.1

Altitude [m]	Input Speed [RPM]				
	400	800	1000	1500	2000
0	1.2	1.1	1.1	1.0	0.7
500	1.2	1.1	1.1	1.0	0.7
1000	1.1	1.0	1.0	0.9	0.6
1500	1.1	1.0	1.0	0.9	0.6
2000	1.1	1.0	1.0	0.9	0.6

P_d - Power to be Dissipated [kW]

the power that a cooling system must dissipate if the power to be transmitted exceeds the gearbox's thermal power.

η_m - Mechanical Efficiency

The ratio between mechanical power output and input; normally considered equal to 0.97 ÷ 0.98 for each epicycloidal reduction stage in the gearbox, and equal to 0.94 ÷ 0.95 for bevel gear; the actual value depends on a number of factors including speed, torque, ratio, assembly position and lubrication.

T_2 - Torque Transmitted [Nm]

this value represents torque continuously applied at a speed of n_1, at which the gearbox has a theoretical lifetime of 10000 h for gears, or 5000 h (L_{h10}) for the bearings in gear mechanisms.

T_{max} - Maximum Transmissible torque [Nm]

the maximum torque transmitted by the accessory supplied with the gearbox, if applicable. This value may limit the maximum transmissible torque of the gearbox.

T_{2max} - Maximum Torque [Nm]

the maximum admissible output torque, as a peak value or for brief periods of time (calculated at 90% Rs of the weakest component).
For drives with a high number of start-ups or inversions, appropriately reduced maximum torque values should be considered.
The value specified refers to the version with a splined female shaft (FS); different versions may have lower values.

T_b - Braking Torque [Nm]

the value of braking torque that may be conveyed statically by the negative brake.

n_1 - Input Speed [RPM]
the speed on the fast side of the gearbox.

n_2 - Output Speed [RPM]
the speed on the slow side of the gearbox.

n_{1max} - Maximum Speed [RPM]
the maximum input speed at the brake. For applications with higher values, contact Dinamic Oil's sales service to determine application compatibility.

i_e - Effective Reduction Ratio
the actual reduction ratio, meaning the ratio between the gearbox's input and output speeds.

nxh - Duration Index [RPMxh]
the value of the product between speed and duration of theoretical lifetime in hours. This value is expressed as $n_2$xh when used with output speed, $n_1$xh with used with input speed.

Duration Values Required for Different Applications

Application	Required Lifetime
Agricultural machinery	300 - 3000
Machines operated intermittently or for short periods of time (construction machines)	3000 - 8000
Machines operated intermittently or for short periods of time with high operational reliability (freight lifts)	8000 - 12000
Machines operated 8 hours a day but not all the time (various industrial machines, rotary mills)	10000 - 25000
Machines operated 8 hours a day all the time (various industrial machines, conveyor belts)	20000 - 30000
Machines operated continuously (rolling mills, textiles machines)	40000 - 50000

k_f - Correction Factor
the factor applied to calculate the theoretical lifetime of bearings with male shafts for values of nxh other than those shown in catalog diagrams. External load curves are calculated for all gearboxes as:
- $n_2$xh = 100000 for output supports
- $n_1$xh = 1500000 for input supports

L_{min} - Minimum Length of Torque Arm [mm]
the minimum length recommended for the torque arm, applied to pendular applications.

Order code

RA	21	3	P	S		78.7	

OUTPUT VERSION

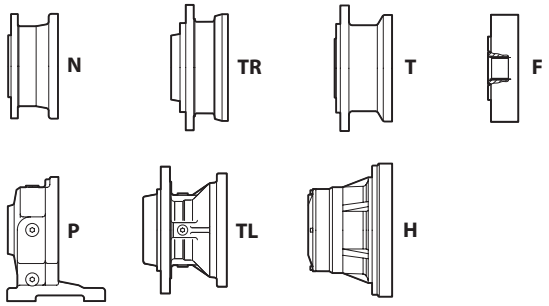

OUTPUT SHAFT

S = Male spline
F = Female spline
C = Cylindrical shaft
K = Extended cylindrical shaft
E = Hexagonal shaft
Q = Hollow female shaft
FS = Female spline
FC = Female cylindrical shaft
U = Female cylindrical shaft

NUMBER OF STAGES

1 - 2 - 3 - 4 - 5 - 6

GEARBOX FRAME SIZE

RE - RA	RE - RA	GB - GBA	GB - GBA
110	**1520**	**12010**	**61000**
210	**2000**	**16000**	**85000**
240	**2520**	**21000**	**110000**
310	**3000**	**26000**	**130000**
510	**3510**	**31000**	GB
610	**4800**	**40000**	**150000**
810	**6000**	**45000**	**205000**
1020	**8000**	**53000**	**235000**

REDUCTION RATIO

Please write the exact ratio as shown on the selection table

EXECUTION

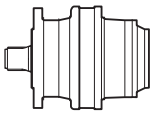

RE - GB = Linear

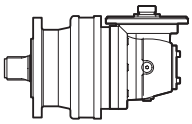

RA - GBA = Angular

COMPOSITION

/ = Standard
L = Light
R = Reinforced
S = Special

dinamic oil

ST	BB	B3	0	BS

OUTPUT ACCESSOIRES

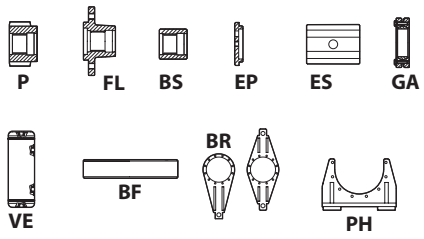

P = Pinion
FL = Flange
BS = Splined bushing
EP = End plate
ES = Hexagonal bushing
GA = Shrink disc
VE = Expansion tank
BF = Splined bar
BR = Torque arm
PH = Foot support

RIGHT ANGLE POSITIONING

MOUNTING POSITION

MOTOR ADAPTER CONFIGURATION

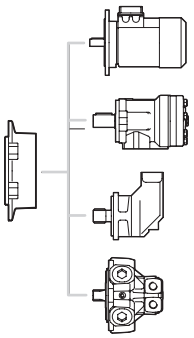

Electric motor

Orbit motor

Axial piston motor

Radial piston motor

DIRECT INPUTS

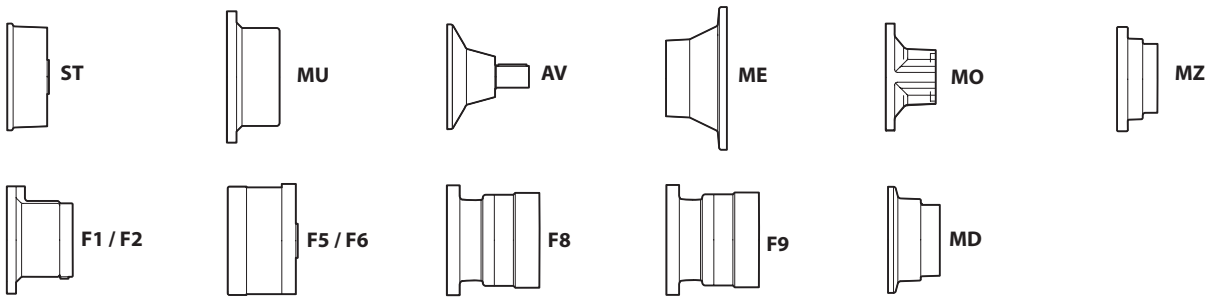

The example shows the ordering code for a right angle planetery gearbox frame 210, with 3 reduction stages a foot mounted output support and a male splined shaft, and 78.7 reduction ratio, with a "ST" input and "SAE B", 16/32 15 teeth motor adapter flange. Horizontal mounting position and standard right angle positioning, and a splined bushing output accessory.

Codice d'ordinazione

RA	21	3	P	S		78.7	

VERSIONE USCITA

G-2

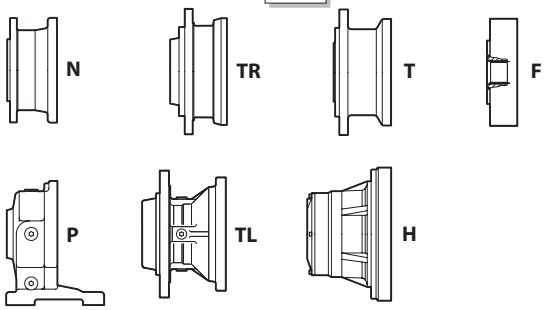

ALBERO IN USCITA

S = Scanalato maschio
F = Scanalato femmina
C = Cilindrico
K = Cilindrico lungo
E = Esagonale
Q = Giunto di attrito
FS = Femmina scanalato
FC = Femmina cilindrico
U = Femmina cilindrico

NUMERO STADI DI RIDUZIONE

1 - 2 - 3 - 4 - 5 - 6

GRANDEZZA RIDUTTORE

RE - RA	RE - RA	GB - GBA	GB - GBA
110	**1520**	**12010**	**61000**
210	**2000**	**16000**	**85000**
240	**2520**	**21000**	**110000**
310	**3000**	**26000**	**130000**
510	**3510**	**31000**	GB
610	**4800**	**40000**	**150000**
810	**6000**	**45000**	**205000**
1020	**8000**	**53000**	**235000**

RAPPORTO DI RIDUZIONE

Indicare il valore del rapporto (compreso virgola e decimale) riportato sulle pagine dei dati tecnici relative ad ogni grandezza

ESECUZIONE

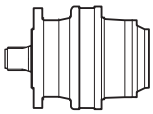

RE - GB = Lineare

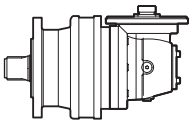

RA - GBA = Angolare

COMPOSIZIONE

/ = Standard
L = Light
R = Rinforzato
S = Speciale

dinamic oil

ST	BB	B3	0	BS

ACCESSORI IN USCITA

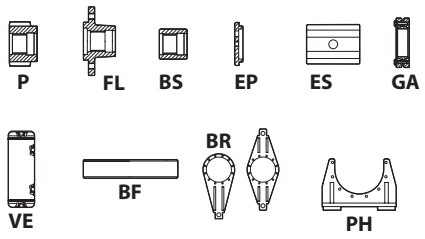

P = Pignone
FL = Flangia
BS = Boccola scanalata
EP = Fondello
ES = Manicotto esagonale
GA = Giunto di attrito
VE = Vaso di espansione
BF = Barra scanalata
BR = Braccio di reazione
PH = Piede

ORIENTAMENTO RIDUTTORE ANGOLARE

POSIZIONE DI MONTAGGIO

PREDISPOSIZIONE MOTORE

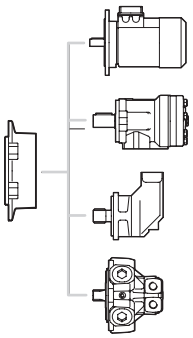

Motore elettrico

Motore idraulico orbitale

Motore idraulico assiale

Motore idraulico a pistoni radiali

ENTRATE DIRETTE

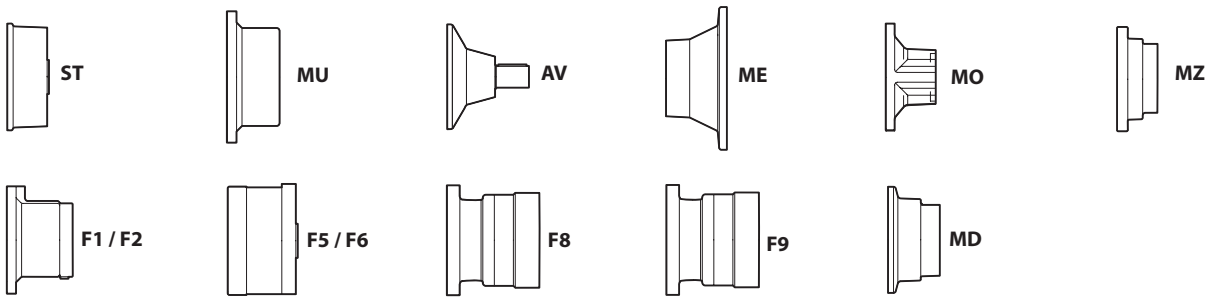

Nell'esempio è illustrato il codice di ordinazione di un riduttore planetario angolare, grandezza 210, tre stadi di riduzione, versione in uscita con i piedi e albero scanalato, rapporto di riduzione 78.7, entrata standard, predisposizione per motore "SAE B" albero 16/32 z=15, posizione di montaggio del riduttore in uscita orizzontale, orientamento del riduttore angolare standard, boccola scanalata in uscita

dinamic oil

LEGAL NOTES

All information in this catalogue has been checked; in case of possible mistakes, we decline all responsibility.

Dinamic Oil reserves the right to amend the technical data of this catalogue without prior notice.

For all further information please contact Dinamic Oil S.p.A. Commercial Department.

NOTE LEGALI

Tutti i contenuti riportati nel presente catalogo sono stati controllati; in caso di eventuali errori viene comunque declinata ogni responsabilità.

Dinamic Oil si riserva la facoltà di modificare senza preavviso i dati tecnici riportati.

Per ulteriori informazioni contattare il servizio tecnico commerciale Dinamic Oil S.p.A.

dinamic oil

DINAMIC OIL S.p.A.
Via Togliatti,15 - 41030 - Bomporto - Modena - Italy
Phone: +39 059 812611 / Fax: +39 059 812600
E-mail: sales@dinamicoil.it - www.dinamicoil.com

DINAMIC OIL FRANCE
ZI Montbertrand BP 3612 - 38236 Charvieu Cedex - France
Phone: +33 (0) 472-46-23-18 / Fax: +33 (0) 472-46-23-27

DINAMIC OIL DEUTSCHLAND GmbH
Frankfurter Straße 151 b - D - 63303 Dreieich-Sprendlingen
Phone: +491736927478

DINAMIC OIL NORWAY A/S
Lindebergveien, 3 - 2016 Frogner
Office: +47 63825040 - Fax: +47 63825041 - Norway

DINAMIC OIL NORTH AMERICA INC.
511 Eagleton Downs Drive - Charlotte - NC - 28134 - USA
Phone: +1-704-587-4600 / Fax: +1-980-939-6297

DINAMIC OIL INDIA PVT LIMITED
Plot N°1295 a MIE Industrial Area Part B Bahadurgarh - Haryana 124507 - India
Phone: 0091 1276 267294 / 0091 1276 267295 - Fax: 0091 1276 267295 / 0091 1125 287537

DINAMIC OIL (Shanghai) Machinery Co.Ltd.
Building 2 No.128 Lane 168 Dieqiao Rd. Kangqiao Industry Park - Pudong - Shanghai – China
Zip Code: 201319 Phone 0086 21 68187100 Fax 0086 21 68187107

DINAMIC OIL ASIA PACIFIC Pte LTD
47L Tuas South Avenue 1 - Singapore 637249
Phone: +65-67910802 - Fax: +65-67912661